TYPICAL ROCK CHECK DAM CONSTRUCTION LAYOUT

CHECK DAM CROSS-SECTION

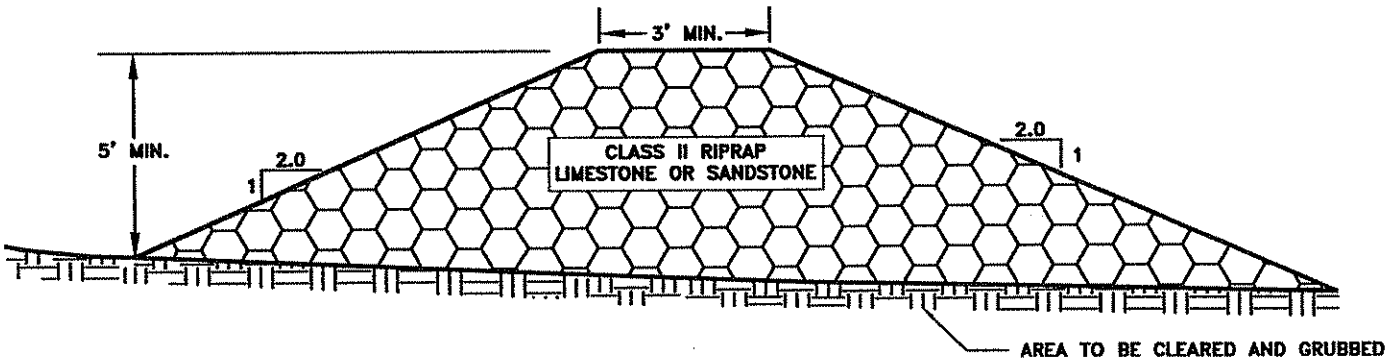

CHECK DAM PROFILE

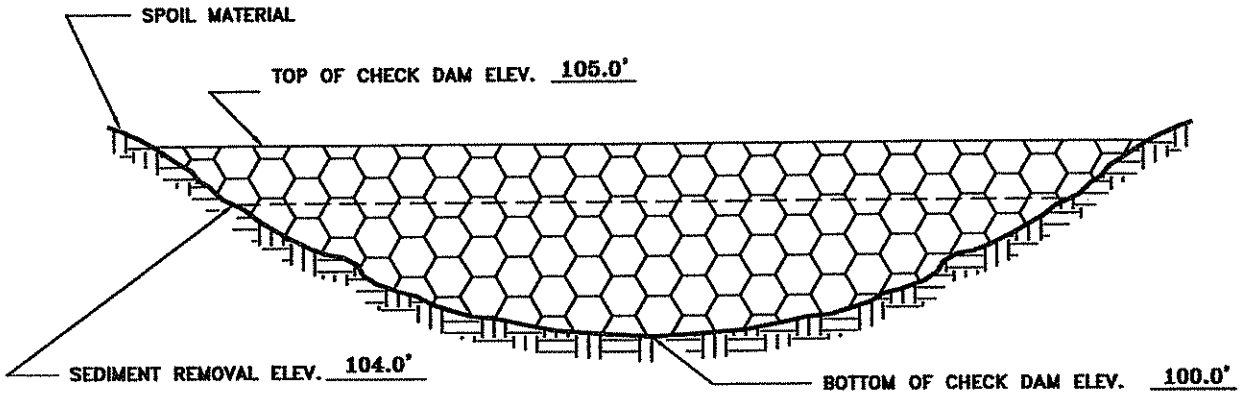

NOTE: ALL ELEVATIONS ASSUMED.

mcgehee engineering corp
post office box 3431
jasper, alabama 35502-3431
telephone: (205) 221-0686 fax: 221-7721
email: cw@mcgehee.org

TYPICAL HAY DAM
CONSTRUCTION LAYOUT

CONSTRUCTION SPECIFICATIONS

1) Bales shall be placed in a row with ends tightly abutting the adjacent bales.
2) Bales shall be securely anchored in place by stakes or re-bar driven through the bales.
3) Inspections shall be made frequently and repair or replacement shall be made promply

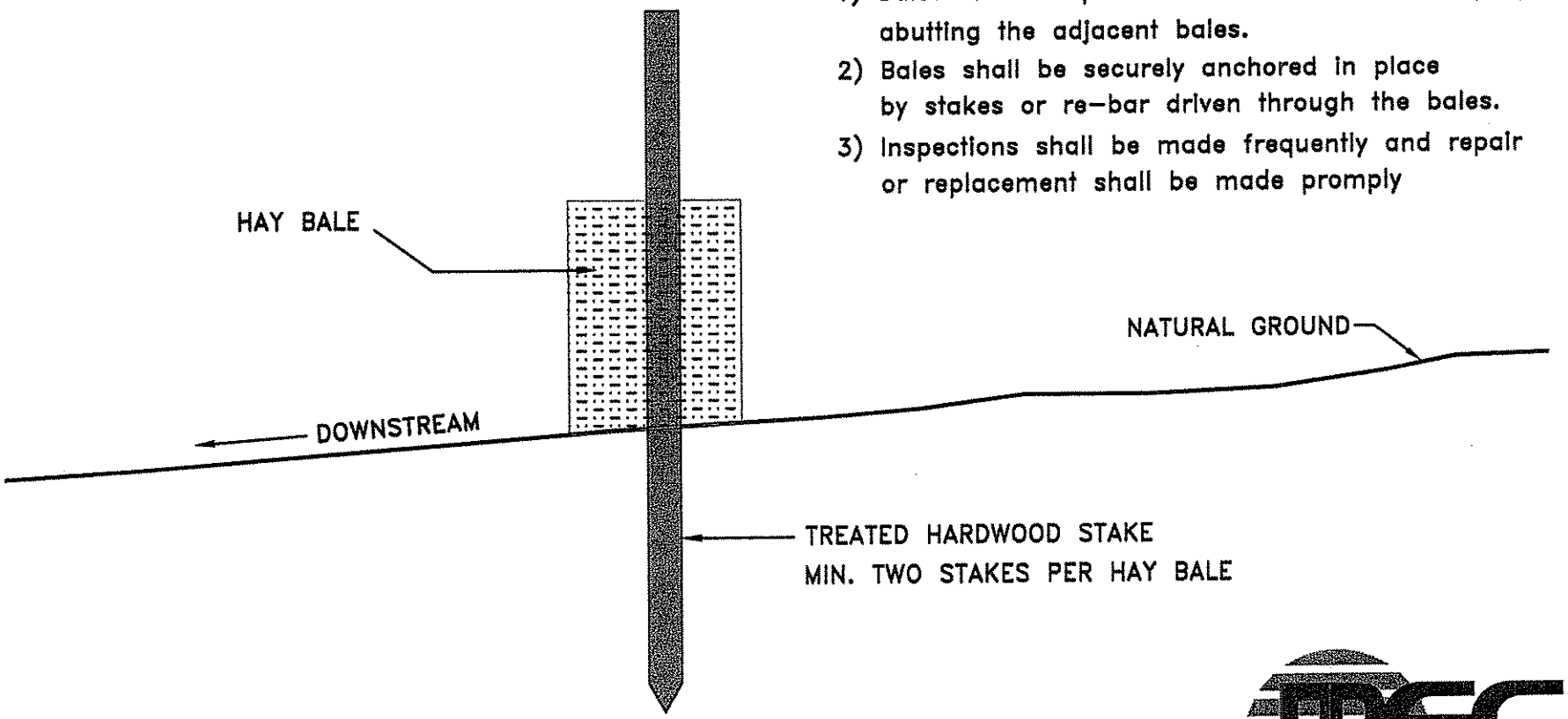

mcgehee engineering corp
post office box 3431
jasper, alabama 35502-3431
telephone: (205) 221-0686 fax: 221-7721
email: cw@mcgehee.org

TYPICAL SILT FENCE CONSTRUCTION LAYOUT

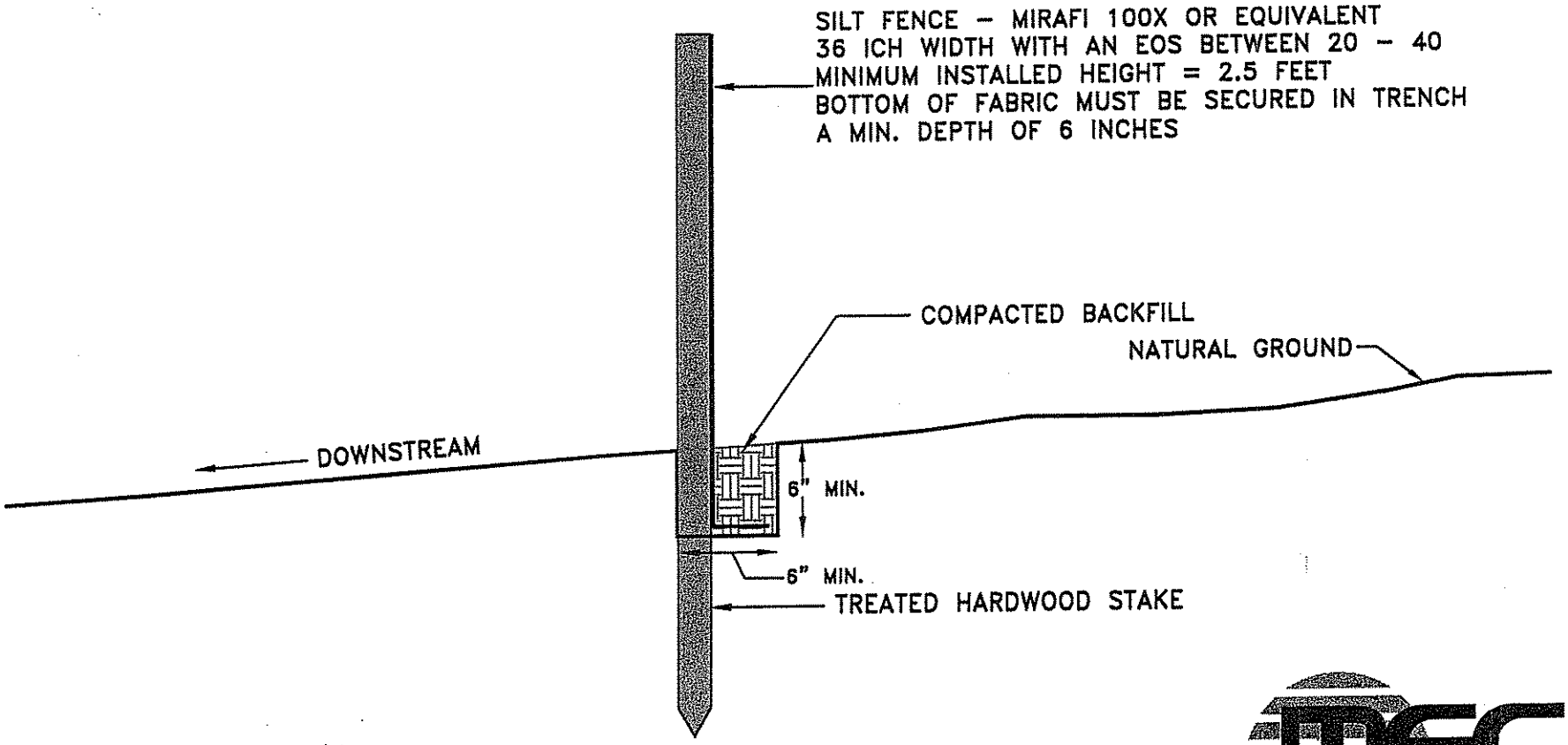

mcgehee engineering corp
post office box 3431
jasper, alabama 35502-3431
telephone: (205) 221-0686 fax: 221-7721
email: cw@mcgehee.org