mcgehee engineering corp

January 28, 2015

Steven Miles, P.E.
Alabama Surface Mining Commission
P. O. Box 2390
Jasper, AL 35502-2390

RE: **Jim Walter Resources, Inc.**
No. 4 Mine, P-3260, R-40

Dear Mr. Miles:

I hereby certify the enclosed detailed design plans for Slurry Ponds G and L for the above referenced mine are in accordance with the Regulations of the Alabama Surface Mining Commission as adopted by Act 81-435 of December 18, 1981 and as amended to date and that the information used in the enclosed basin design plans is true and correct to the best of my knowledge and belief.

If you have any questions or need additional information, please do not hesitate to contact our office.

Sincerely,

MCGEHEE ENGINEERING CORP.

Jeff Aldridge

ALABAMA LICENSED PROFESSIONAL No. 33959 ENGINEER JEFFREY G. ALDRIDGE

Jeffrey G. Aldridge, P.E.
Alabama Reg. No. 33959

Post Office Box 3431 • 450 19th Street • Jasper, Alabama 35502-3431 • 205-221-0686 • Fax 205-221-7721 • cw@mcgehee.org

PROJECT DESCRIPTION

Slurry Impoundments G and L are proposed as emergency/secondary options of containing the fine refuse (slurry) produced from the No. 4 Mine prep plant operation. The ponds are proposed for emergency use in the event one of the larger impoundments used by JWR is not available.

The slurry will be allowed to separate into its two components, water and coal/rock fines. The fines will settle to the bottom of the impoundment and the water will leave the impoundment through the spillway system located at the embankment. The impoundment will be operated in such a manner as to discharge clarified water from the impoundment. The water will then pass into a drainage path remaining from mining and pass through existing Sediment Basins 020A and 020 for final discharge. Slurry pumping will cease when the accumulated slurry reaches the maximum allowable slurry volume as set forth in the detailed design plans.

IMPOUNDMENT CLASSIFICATION

The total storage capacity of the proposed impoundment is less than 20 acre-feet and the crest of the emergency spillway is less than 20 feet above the upstream toe, therefore, the impoundment does not meet the criteria of 30 CFR 77.216 (a).

Based on the criteria of Technical Release 60 – Earth Dams and Reservoirs published by the USDA SCS the impoundment is a Class (a). Class (a) structures are "dams located in rural or agricultural areas where failure may damage farm buildings, agricultural land or township or county roads." There are no residences, houses or structures of public roads located downstream of the proposed impoundment that could be impacted by failure of the embankment. There is only undeveloped land downstream of the proposed impoundment.

CONSTRUCTION AND RECLAMATION

Slurry Ponds G and L are only proposed as emergency slurry disposal facilities to be constructed in the event that problems arise with other existing disposal facilities. Because of the available slurry impounding capacity (approximately 18 acre-feet per impoundment), Slurry Ponds G and L will only last approximately one month or less (each) at the maximum plant production rate.

Once the accumulated slurry reaches the slurry storage capacity as outlined on the plan sheet for each pond, the pumping of slurry will be ceased immediately and slurry will then be pumped to another impoundment. Slurry Ponds G and L will be covered with coarse refuse as Rock Dump No. 6 advances and covers the ponds. The ponds will be entirely covered by coarse refuse. Final reclamation will occur as Rock Dump No. 6 is reclaimed.

In the event that the slurry ponds must be abandoned prior to the slurry level reaching its maximum design capacity, the pool area will be dewatered in an environmentally safe manner and will be filled with coarse refuse and completely covered by Rock Dump No. 6. Final

reclamation will occur as Rock Dump No. 6 is reclaimed. The entire ponds including embankments and concrete spillways will be covered with covered with Rock Dump No. 6.

Slurry Pond G is not dependent on the construction of Slurry Pond L. The spillway and embankment of Slurry Pond G were designed to function as intended with or without Slurry Pond L being in place.

UNDERGROUND MINE LOCATIONS

Deep underground mining in the Blue Creek coal seam has previously occurred under the site of Slurry Pond G and L. JWR records indicate that longwall mining was completed in this area in 1979. The Blue Creek coal seam lies in excess of 1,500 feet from the surface at the location of proposed Slurry Ponds G and L. Any subsidence that was going to occur should have long since occurred given the approximately +30 years since the removal of coal.

SUBSIDENCE MITIGATION PLAN

In the event of minor stress cracks or settling of surface elevations of the structures, the following shall occur:

1) Minor stress cracks shall be repaired, backfilled and compacted to prevent infiltration of surface water.
2) Should settling of the embankment occur, the top of dam will be raised with suitable fill material and compacted to the design elevation to insure adequate freeboard.
3) Any repairs to the embankment shall be revegetated as soon as the repairs are completed.

SPECIFICATIONS FOR COAL PROCESSING WASTE IMPOUNDMENTS IMPOUNDING LESS THAN 20 AC-FT OR LESS THAN 20 FEET HIGH

The embankment for coal processing waste will be designed and constructed using the following as minimum criteria:

1. EMBANKMENT REQUIREMENTS

A) The minimum width of the top of the embankment will under no circumstance be less than twelve (12) feet.

B) The embankment will have a minimum front and back slope no steeper than the slopes listed on the detailed design sheet.

C) The foundation area of the embankment will be cleared and grubbed of all organic matter with no surface slope steeper than 1 horizontal to 1 vertical. The entire wet area, as measured from the upstream toe of the embankment to the normal pool level, will be cleared of trees and large brush.

D) A core will be constructed in a cutoff trench along the centerline of the embankment. The cutoff trench will be of suitable depth and width to attain relatively impervious material.

E) The embankment construction material will be free of sod, roots, stumps, rocks, etc., which exceed six (6") inches in diameter. The embankment material will be placed in layers of twelve (12") inches or less and compacted to ninety five (95%) percent of the standard proctor density, as set forth in ASTM. Coal processing waste will not be used in the construction of dams and embankments.

F) The embankment, foundation and abutments will be designed and constructed to be stable under normal construction and operating conditions, with a minimum static safety factor of 1.5 at normal pool level with steady seepage saturation conditions.

G) The actual constructed height of the embankment will be a minimum of five (5%) percent higher than the design height to allow for settling over the life of the embankment.

H) The design embankment height for temporary impoundments will be a minimum of one (1) foot above the maximum water level anticipated from a 10 Year - 24 Hour or a 25 Year - 6 Hour precipitation event (whichever is greater). The design embankment height for permanent impoundments will be a minimum of one (1) foot above the maximum water level anticipated from a 10 Year - 24 Hour or a 25 Year - 6 Hour precipitation event (whichever is greater).

I) For embankments constructed as point source discharges, the embankment will be constructed and abutments keyed into undisturbed, virgin, ground if at all possible. In the

event that this can not be achieved, additional design and construction specifications will be submitted in the detailed design plans.

J) The embankment and all areas disturbed in the construction of the embankment will be seeded with a mixture of perennial and annual grasses, fertilized and mulched to prevent erosion and ensure restabilization. Hay dams, silt fences, rock check dams, etc. will be installed, where deemed necessary, as additional erosion prevention methods.

2. DISCHARGE STRUCTURE REQUIREMENTS

A) The primary spillway will be designed to adequately carry the anticipated peak runoff from a 10 Year - 24 Hour precipitation event. The combination primary and secondary (emergency) spillway system will be designed to safely carry the anticipated peak runoff from a 25 Year - 6 Hour precipitation event. When waste impoundments are proposed in the drainage course of a public water supply, the spillway system will be designed and constructed to adequately carry the runoff from a 50 Year - 24 Hour precipitation event.

B) Channel linings, for secondary (emergency) spillways will be a trapezoidal open channel constructed in natural ground and planted with a mixture of both annual and perennial grasses being predominantly fescue and bermuda. In the event that the spillway can not be constructed in natural ground the spillway will be lined with riprap, concrete, asphalt or durable rock (See Detailed Design Plans for Spillway Lining).

C) When consisting of pipe, the primary spillway will be installed according to Class "C" pipe installation for embankment bedding.

D) Waste impoundments with a single spillway system, such as a skimmer board, will be a trapezoidal open channel constructed in consolidated, nonerodible material and lined with rip-rap, concrete, asphalt or durable rock (See Detailed Design Plans for Spillway Lining).

E) The primary spillway will be designed and constructed with device to eliminate floating solids from leaving the impoundment. This device will consist of a turned down elbow when using pipe or a skimmer system when using an open channel spillway.

F) When necessary, to prevent erosion of the embankment or discharge area, a splash pad of rip-rap, durable rock, sacrete, etc. will be installed at the discharge end of the primary spillway.

G) The combined spillway systems, for waste impoundments constructed in series, will be designed to adequately accommodate the entire drainage area.

3. INSPECTION, MAINTENANCE AND CERTIFICATION REQUIREMENTS

A) Inspections will be conducted regularly during construction of the waste impoundment by a qualified registered professional engineer or other qualified person under the direction of a professional engineer. Upon completion of construction, the sediment basin will be certified, by a qualified registered professional engineer, to the Regulatory Authority as having been constructed in accordance with the approved detailed design plans.

B) Waste impoundments will be inspected semi-monthly for erosion, instability, etc., with maintenance performed as necessary, until the removal of the structure or until a Phase III Bond Release is granted.

C) Waste impoundments will be examined quarterly for structural weakness, instability, erosion, slope failure, or other hazardous conditions with maintenance performed as necessary.

D) Formal inspections will be made annually, by a qualified registered professional engineer or other qualified person under the direction of a professional engineer, including any reports or modifications, in accordance with 880-X- 10C- .20 of the Alabama Surface Mining Regulations.

E) Slurry pumping will cease when the accumulated slurry reaches the maximum allowable slurry volume as set forth in the detailed design plans.

4. SLURRY IMPOUNDMENT REMOVAL REQUIREMENTS

Slurry pumping will be ceased when the slurry elevation reaches the design elevation set forth in the detailed design plans. The impoundments will be covered with coarse refuse as Rock Dumps 4 and 6 advance and cover the impoundment areas. The impoundments will then be considered eliminated and will be a part of Rock Dump No. 6. The area will receive final reclamation during reclamation of Rock Dump No. 6.

The following steps shall be taken to abandon Slurry Impoundments G and L in the event mining is stopped and the rock dump does not advance far enough to cover the impoundments:

A) Each slurry impoundment will be reclaimed when slurry accumulates to the design allowable slurry volume or when mining is completed, whichever comes first. Reclamation of each slurry impoundment will take place as follows:

B) The slurry discharge pipe will be disconnected and removed from the site.

C) In the event that the slurry impoundment must be abandoned prior to the slurry level reaching its maximum design capacity, the embankment will be breached down to an elevation two feet above the existing slurry level, constructing a new spillway channel

adequate to carry the anticipated flows. The impoundment will then be dewatered in an environmentally safe manner such as pumping, siphoning, etc.

D) After abandonment and/or successfully dewatering of the slurry impoundment, a composite sample will be taken of the final slurry surface. Said sample will be transported to a laboratory where the sample will be analyzed for paste pH, total sulfur and neutralization potential. Using these three parameters, the acid-base account will be calculated for sample. If the results show the material to be acid forming then lime will be administered on the impoundment for 2 feet of depth. After the lime has been applied, a working surface (using existing spoil or coarse refuse) will be constructed on the impoundment that will permit equipment travel and provide for positive drainage. All spoil material slopes on the impoundment shall have a maximum and minimum grade of 5 percent and 1 percent, respectively.

E) All spoil or refuse fill shall be spread in one (1) foot maximum layers with a minimum compaction of 90 percent of its maximum dry density as determined by the standard proctor compaction test. The thickness of the working surface will be no more than is necessary to support equipment that will be working upon the impoundment surface.

F) Including the completion of the above mentioned working surface, the final limed slurry surface will be covered with a minimum of four (4) feet of the best available non-toxic, noncombustible and non-acid forming material. The area will then be reclaimed and revegetated in accordance with the approved reclamation plan.

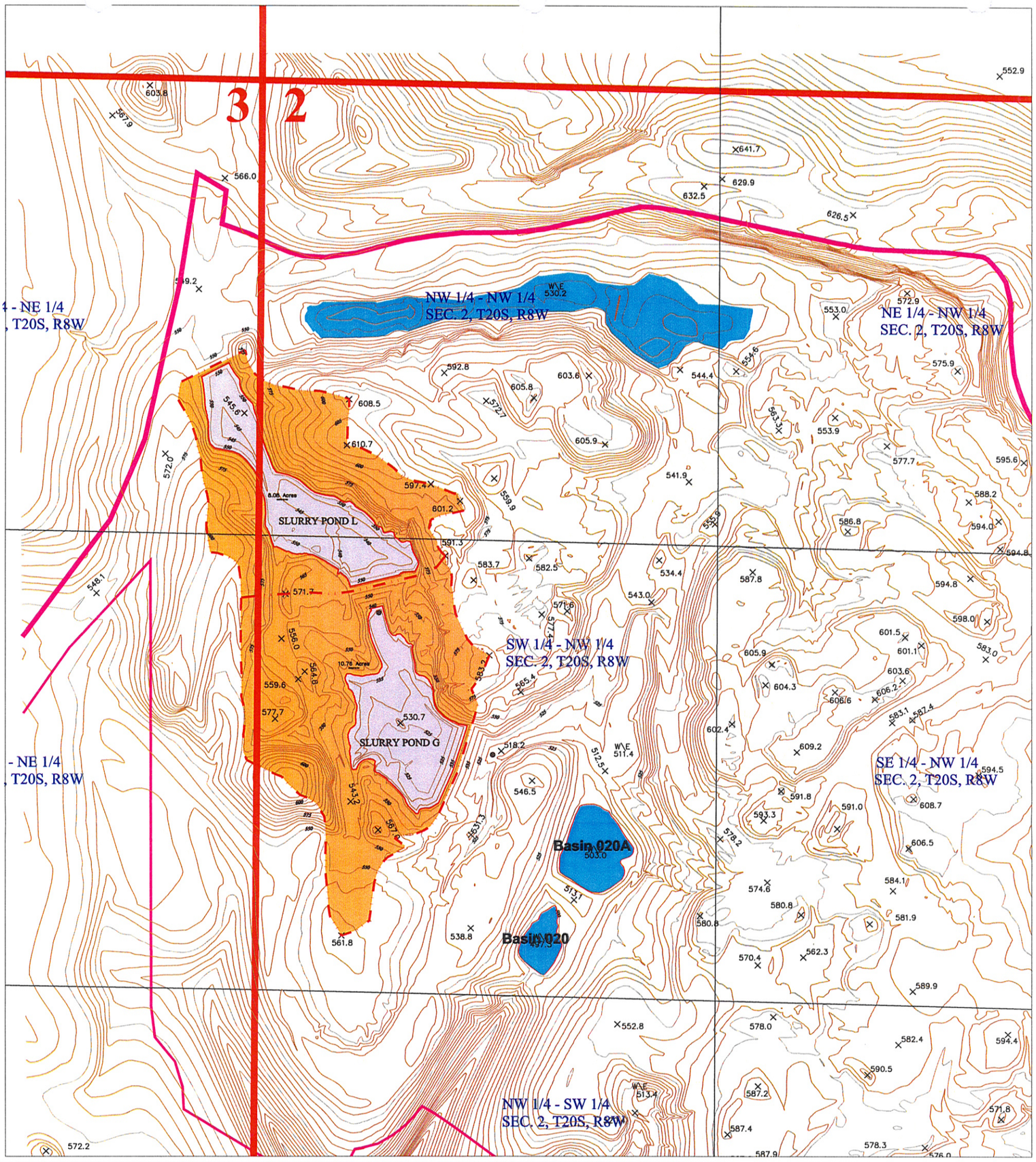

JIM WALTER RESOURCES, INC.
NO. 4 MINE, P-3260, R-40

SLURRY PONDS G and L
WATERSHED MAP

SCALE: 1" = 300'

MAP LEGEND

- PERMIT BOUNDARY
- GRADED & BARE, C.N. 81
- B — SLURRY POND, C.N. 100
- B — SEDIMENT BASIN, C.N. 100
- DRAINAGE DIVIDE
- IMPOUNDED WATER

N
W E
S

mcgehee engineering corp
post office box 3431
jasper, alabama 35502-3431
telephone: (205) 221-0686 fax: 221-7721
email: cw@mcgehee.org

JIM WALTER RESOURCES, INC.
NO. 4 MINE, P-3260, R-40

PLAN VIEW DRAWING
SCALE: 1" = 100'

SLURRY POND L

UPSTREAM TOE ELEV.: 536.0'
SEDIMENT REMOVAL ELEV.: 552.6'
EMERGENCY SPILLWAY ELEV.: 553.6'
***MAXIMUM WATER ELEV.: 554.14'*
DESIGN TOP OF DAM ELEV.: 555.14'
CONSTRUCTION TOP OF DAM ELEV.: 556.1'

EMERGENCY SPILLWAY: 10' WIDE TRAPEZOIDAL CONCRETE LINED

SLURRY POND G

UPSTREAM TOE ELEV.: 521.0'
SEDIMENT REMOVAL ELEV.: 536.8'
EMERGENCY SPILLWAY ELEV.: 537.8'
***MAXIMUM WATER ELEV.: 538.56'*
DESIGN TOP OF DAM ELEV.: 539.56'
CONSTRUCTION TOP OF DAM ELEV.: 540.5'

EMERGENCY SPILLWAY: 10' WIDE TRAPEZOIDAL CONCRETE LINED

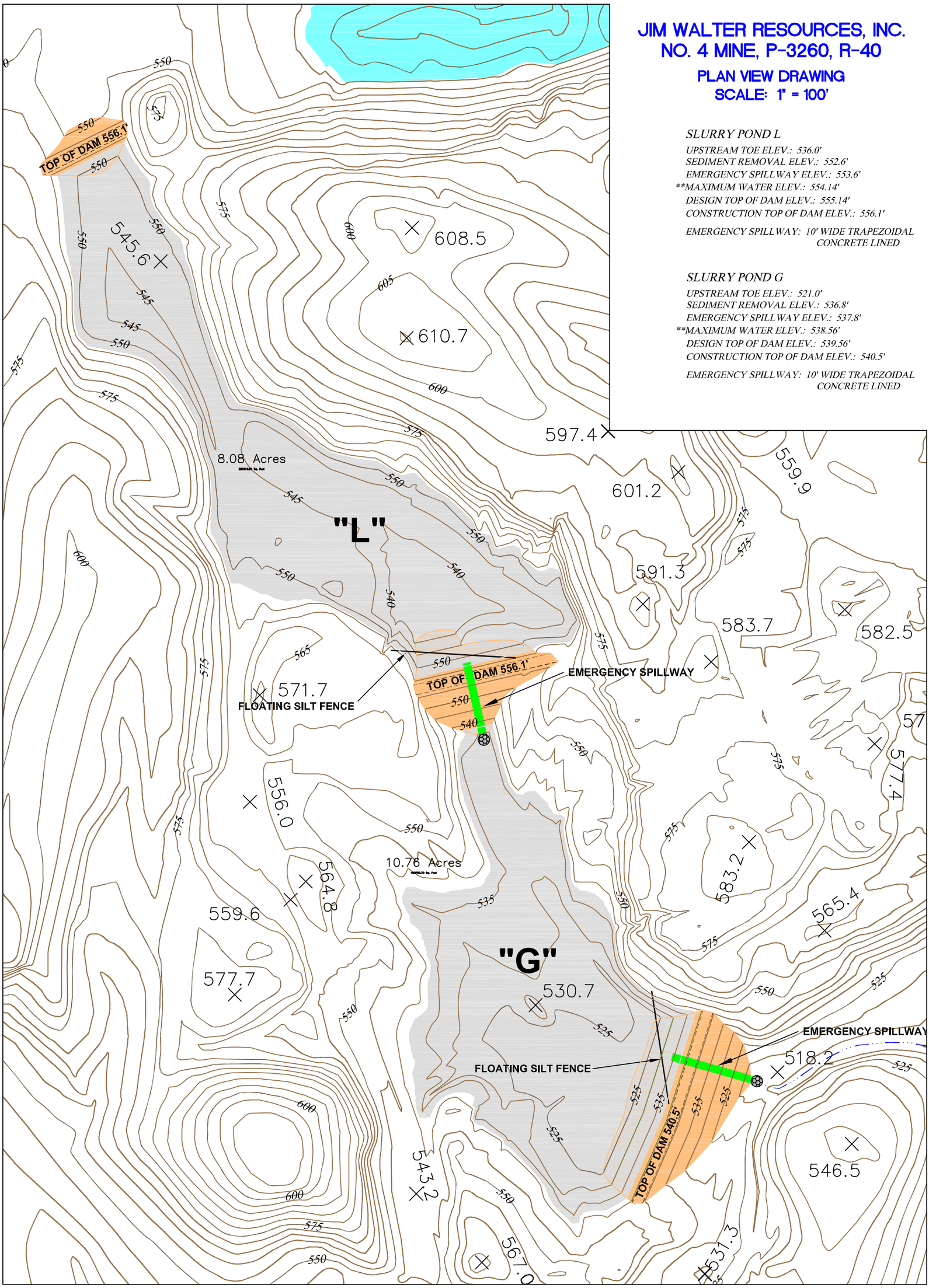

EMBANKMENT
NORMAL POOL AREA
IMPOUNDED WATER
EXISTING DRAINAGE COURSE
ENERGY DISSIPATER (CLASS II SANDSTONE RIPRAP)

**** 25 YEAR - 6 HOUR PRECIPITATION EVENT.**

5' CONTOUR INTERVAL

N
W E
S

mcgehee engineering corp
post office box 3431
jasper, alabama 35502-3431
telephone: (205) 221-0686 fax: 221-7721
email: cw@mcgehee.org

JIME WALTER RESOURCES, INC.
NO. 4 MINE, P-3260, R-40

DETAILED DESIGN PLANS
SLURRY POND G

EMBANKMENT CROSS-SECTION

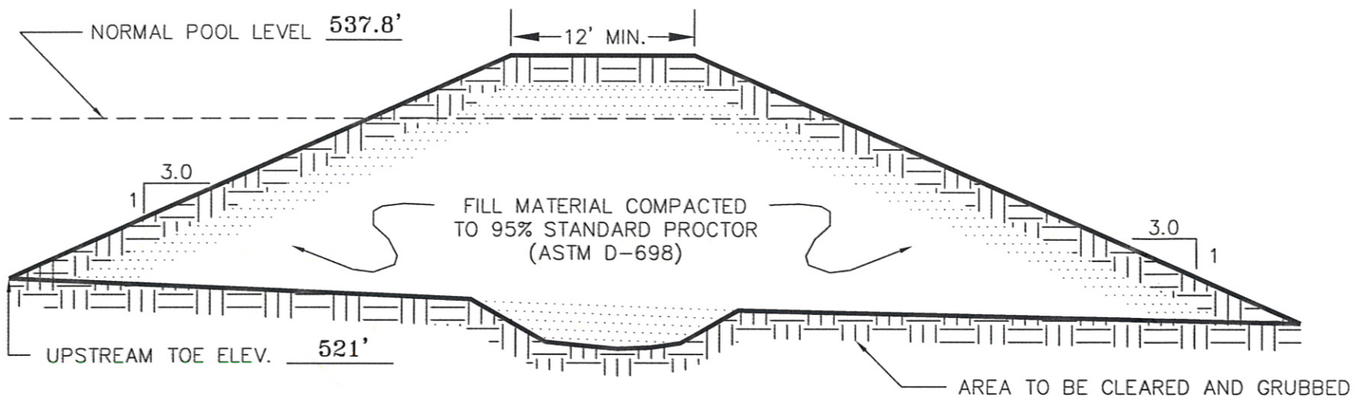

COMPANY: JIM WALTER RESOURCES, INC.

MINE NAME: NO. 4 MINE

PERMIT #: P-3260, R-40

BASIN I.D. #: SLURRY IMPOUNDMENT G

IMPOUNDMENT PROFILE

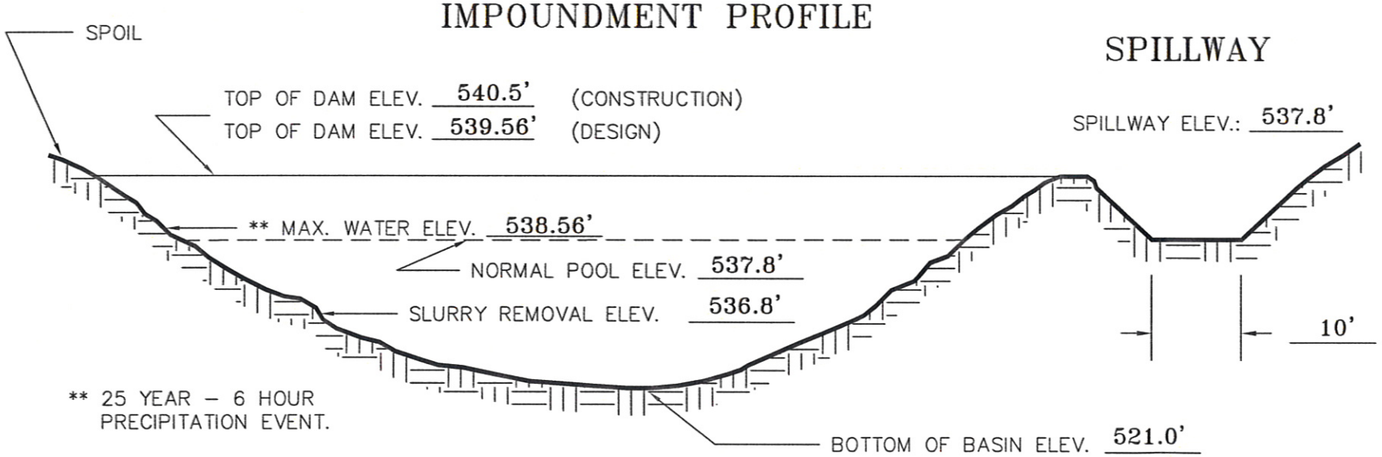

SPILLWAY

KEY BASIN PARAMETERS

DRAINAGE AREA	18.8	ACRES
DISTURBED AREA	N/A	ACRES
SLURRY STORAGE	17.06	AC.FT.
DETENTION STORAGE	2.39	AC.FT.
PERMANENT POOL CAPACITY	19.45	AC.FT.
** TOTAL BASIN STORAGE CAPACITY	21.06	AC.FT.
** PEAK INFLOW	45.09	C.F.S.
** PEAK OUTFLOW	14.81	C.F.S.

NOTE: ALL ELEVATIONS ASSUMED.

** 25 YEAR - 6 HOUR PRECIPITATION EVENT.

EMERGENCY SPILLWAY

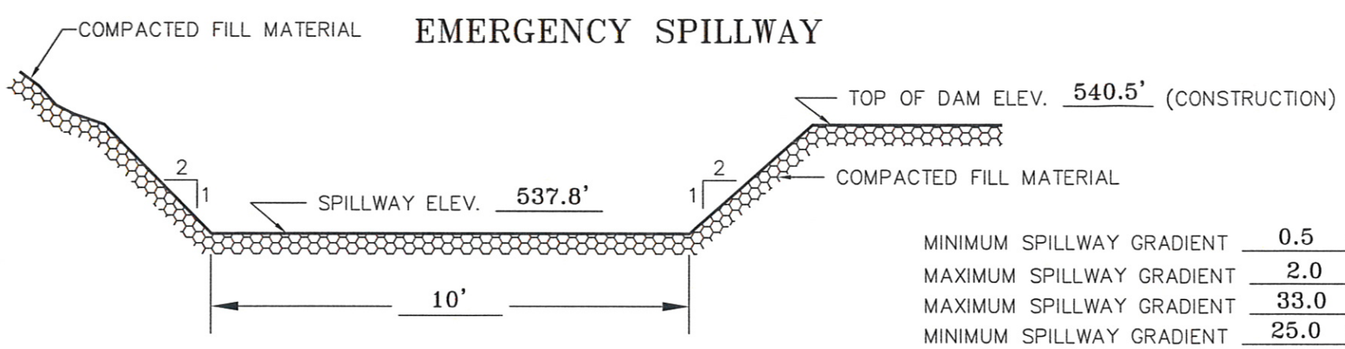

MINIMUM SPILLWAY GRADIENT 0.5 % (CONTROL SECTION)

MAXIMUM SPILLWAY GRADIENT 2.0 % (CONTROL SECTION)

MAXIMUM SPILLWAY GRADIENT 33.0 % (TAIL DITCH SECTION)

MINIMUM SPILLWAY GRADIENT 25.0 % (TAIL DITCH SECTION)

SEE SPILLWAY CONTROL SECTION AND TAIL DITCH DESIGN FOR CHANNEL LINING REQUIREMENTS.

mcgehee engineering corp
post office box 3431
jasper, alabama 35502-3431
telephone: (205) 221-0686 fax: 221-7721
email: cw@mcgehee.org

Copyright 1998-2010 Pamela J. Schwab

No. 4 Mine, P-3260, R-40 Slurry Pond G

Elevation-Area-Capacity Table

Elevation (ft)	Area (ac)	Capacity (ac-ft)
521.00	0.000	0.000
521.50	0.009	0.001
522.00	0.034	0.011
522.50	0.077	0.039
523.00	0.138	0.092
523.50	0.215	0.179
524.00	0.309	0.309
524.50	0.421	0.491
525.00	0.550	0.733
525.50	0.604	1.022
526.00	0.660	1.338
526.50	0.719	1.682
527.00	0.780	2.057
527.50	0.844	2.463
528.00	0.910	2.901
528.50	0.979	3.373
529.00	1.050	3.880
529.50	1.124	4.424
530.00	1.200	5.004
530.50	1.277	5.623
531.00	1.355	6.281
531.50	1.436	6.979
532.00	1.520	7.718
532.50	1.606	8.499
533.00	1.694	9.324
533.50	1.784	10.193
534.00	1.877	11.109
534.50	1.973	12.071
535.00	2.070	13.082
535.50	2.135	14.133
536.00	2.202	15.217
536.50	2.269	16.335
537.00	2.338	17.487
537.50	2.407	18.673
538.00	2.478	19.894
538.50	2.549	21.151

Elevation (ft)	Area (ac)	Capacity (ac-ft)
539.00	2.622	22.444
539.50	2.695	23.773
540.00	2.770	25.139
540.50	2.855	26.546
541.00	2.942	27.995
541.50	3.029	29.487
542.00	3.119	31.024
542.50	3.209	32.606
543.00	3.301	34.234
543.50	3.393	35.907
544.00	3.488	37.627
544.50	3.583	39.395
545.00	3.680	41.211

SPILLWAY CHANNEL SPECIFICATIONS
SLURRY POND G

The entire control section, transition section and tail ditch section of the emergency spillway will be cut along the centerline of the embankment into compacted fill material or existing spoil and lined as follows:

The entire control section of the emergency spillway will be lined with a minimum of four (4") inches of 3,000 psi concrete extending up the channel side a minimum of 1.76 feet as measured vertically at the control entrance tapering down to 1.49 feet at the end of the control section. The transition section will be lined similarly up the channel side a minimum of 1.49 feet at the beginning of the transition section tapering down to 1.15 feet at the end of the transition section. The entire tail ditch section will be lined similarly up the channel side a minimum of 1.15 feet as measured vertically. All concrete will be reinforced with 10 gauge, 6" x 6" welded wire mesh. Fibermesh may be added to the concrete for additional strength however, the addition of fibermesh shall not be used in place of the required 6" x 6" welded wire.

The gradient of the control section of the emergency spillway will not exceed two (2.0%) percent and not be less than 0.5%. The gradient of the tail ditch section of the emergency spillway will not exceed thirty-three (33%) percent and will not be less than twenty-five (25.0%).

See enclosed SEDCAD 4.0 spillway tail ditch section design, Plan Sheet cross-section and Spillway Profile Sheet for the minimum and maximum emergency spillway construction requirements.

Copyright 1998-2010 Pamela L Schwab

No. 4 Mine, P-3260, R-40 Slurry Pond G Spillway Control Section

Material: Concrete, Rubble

Trapezoidal Channel

Bottom Width (ft)	Left Sideslope Ratio	Right Sideslope Ratio	Slope (%)	Manning's n	Freeboard Depth (ft)	Freeboard % of Depth	Freeboard Mult. x (VxD)
10.00	2.0:1	2.0:1	0.5	0.0220	1.00		

	w/o Freeboard	w/ Freeboard
Design Discharge:	14.81 cfs	
Depth:	0.49 ft	1.49 ft
Top Width:	11.95 ft	15.95 ft
Velocity:	2.77 fps	
X-Section Area:	5.35 sq ft	
Hydraulic Radius:	0.439 ft	
Froude Number:	0.73	

Copyright 1998-2010 Pamela J. Schwab

No. 4 Mine, P-3260, R-40 Slurry Pond G Spillway Tail Ditch Section

Material: Concrete, Rubble

Trapezoidal Channel

Bottom Width (ft)	Left Sideslope Ratio	Right Sideslope Ratio	Slope (%)	Manning's n	Freeboard Depth (ft)	Freeboard % of Depth	Freeboard Mult. x (VxD)
10.00	2.0:1	2.0:1	25.0	0.0220	1.00		

	w/o Freeboard	w/ Freeboard
Design Discharge:	14.81 cfs	
Depth:	0.15 ft	1.15 ft
Top Width:	10.61 ft	14.61 ft
Velocity:	9.43 fps	
X-Section Area:	1.57 sq ft	
Hydraulic Radius:	0.147 ft	
Froude Number:	4.32	

JIM WALTER RESOURCES, INC.
NO. 4 MINE, P-3260, R-40
SLURRY POND G SPILLWAY PROFILE

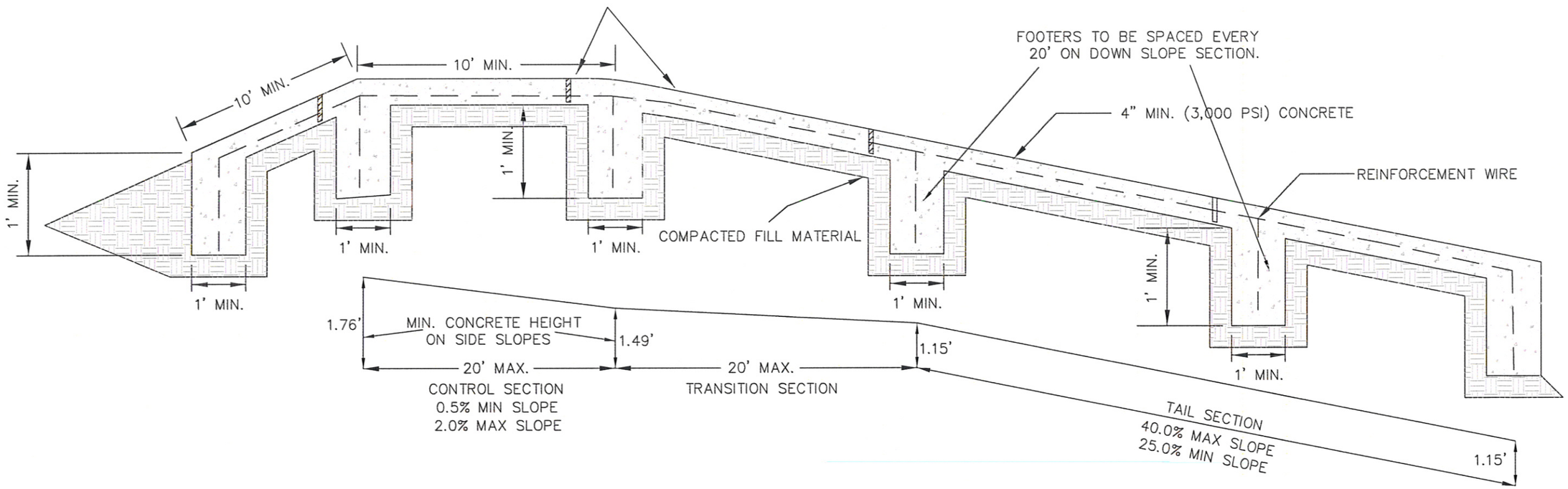

TYPICAL SPILLWAY CROSS-SECTION

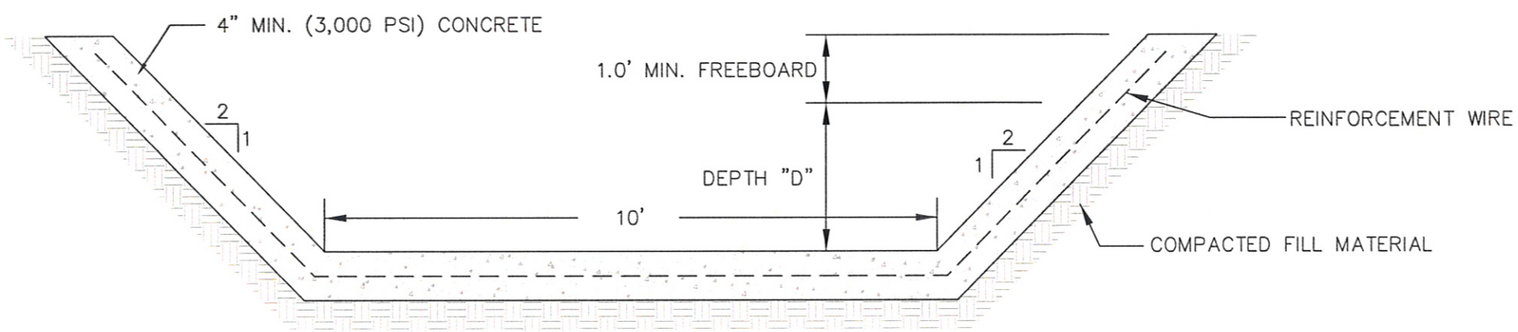

	BEGINNING OF CONTROL SECTION	END OF CONTROL SECTION	END OF TRANSITION SECTION	ENTIRE TAIL SECTION
MAXIMUM FLOW DEPTH "D"	0.76'	0.49'	0.15'	0.15'
FREEBOARD "F"	1.0'	1.0'	1.0'	1.0'
MINIMUM CONCRETE HEIGHT ON SIDE SLOPES	1.76'	1.49'	1.15'	1.15'

mcgehee engineering corp
post office box 3431
jasper, alabama 35502-3431
telephone: (205) 221-0686 fax: 221-7721
email: cw@mcgehee.org

EMBANKMENT CROSS-SECTION

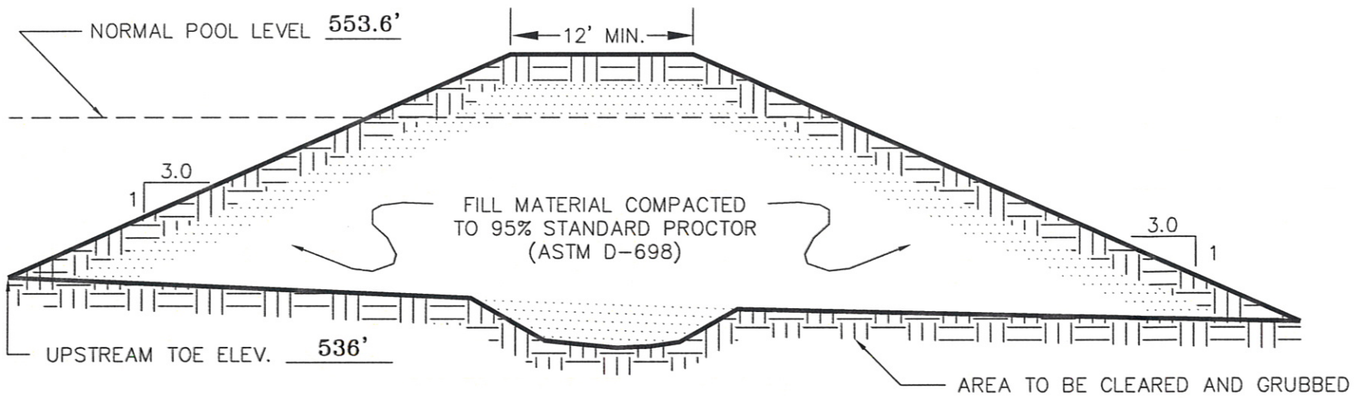

COMPANY: JIM WALTER RESOURCES, INC.

MINE NAME: NO. 4 MINE

PERMIT #: P-3260, R-40

BASIN I.D. #: SLURRY IMPOUNDMENT L

IMPOUNDMENT PROFILE

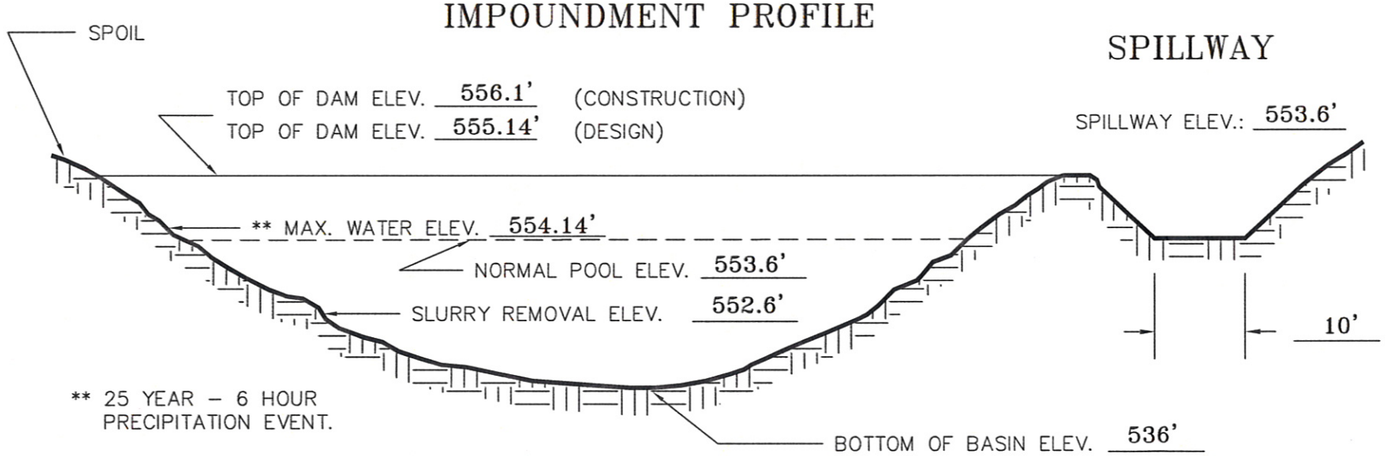

KEY BASIN PARAMETERS

DRAINAGE AREA	8	ACRES
DISTURBED AREA	N/A	ACRES
SLURRY STORAGE	16.88	AC.FT.
DETENTION STORAGE	2.61	AC.FT.
PERMANENT POOL CAPACITY	19.49	AC.FT.
** TOTAL BASIN STORAGE CAPACITY	20.9	AC.FT.
** PEAK INFLOW	19.80	C.F.S.
** PEAK OUTFLOW	5.07	C.F.S.

NOTE: ALL ELEVATIONS ASSUMED.

** 25 YEAR - 6 HOUR PRECIPITATION EVENT.

EMERGENCY SPILLWAY

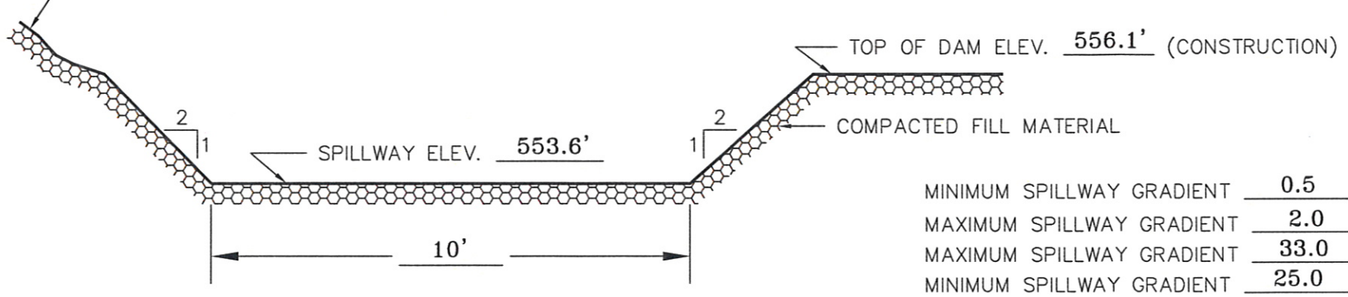

MINIMUM SPILLWAY GRADIENT 0.5 % (CONTROL SECTION)

MAXIMUM SPILLWAY GRADIENT 2.0 % (CONTROL SECTION)

MAXIMUM SPILLWAY GRADIENT 33.0 % (TAIL DITCH SECTION)

MINIMUM SPILLWAY GRADIENT 25.0 % (TAIL DITCH SECTION)

SEE SPILLWAY CONTROL SECTION AND TAIL DITCH DESIGN FOR CHANNEL LINING REQUIREMENTS.

mcgehee engineering corp
post office box 3431
jasper, alabama 35502-3431
telephone: (205) 221-0686 fax: 221-7721
email: cw@mcgehee.org

JIME WALTER RESOURCES, INC.
NO. 4 MINE, P-3260, R-40

HYDROLOGY AND SEDIMENTOLOGY PREDICTION
25 YEAR - 6 HOUR PRECIPITATION EVENT
SLURRY POND G

Copyright 1998 -2010 Pamela L Schwab

Jim Walter Resources, Inc.
No. 4 Mine, P-3260, R-40
Slurry Pond G

25 Year 6 Hour Event

Sanford M. Hendon, P.E.

General Information

Storm Information:

Storm Type:	SCS 6 HOUR
Design Storm:	25 yr - 6 hr
Rainfall Depth:	5.000 inches

Structure Networking:

Type	Stru #	(flows into)	Stru #	Musk. K (hrs)	Musk. X	Description
Pond	#1	==>	End	0.000	0.000	Slurry Pond G

#1
Pond

Structure Summary:

		Immediate Contributing Area (ac)	Total Contributing Area (ac)	Peak Discharge (cfs)	Total Runoff Volume (ac-ft)
#1	In	18.800	18.800	45.09	4.81
	Out			14.81	4.81

Structure Detail:

Structure #1 (Pond)

Slurry Pond G

Pond Inputs:

Initial Pool Elev:	537.80 ft
Initial Pool:	19.44 ac-ft

Emergency Spillway

Spillway Elev	Crest Length (ft)	Left Sideslope	Right Sideslope	Bottom Width (ft)
537.80	20.00	2.00:1	2.00:1	10.00

Pond Results:

Peak Elevation:	538.56 ft
Dewater Time:	0.62 days

Dewatering time is calculated from peak stage to lowest spillway

Elevation-Capacity-Discharge Table

Elevation	Area (ac)	Capacity (ac-ft)	Discharge (cfs)	Dewater Time (hrs)
521.00	0.000	0.000	0.000	
521.25	0.002	0.000	0.000	
521.50	0.009	0.001	0.000	
521.75	0.019	0.005	0.000	
522.00	0.034	0.011	0.000	
522.25	0.054	0.022	0.000	
522.50	0.077	0.039	0.000	
522.75	0.105	0.061	0.000	
523.00	0.138	0.092	0.000	
523.25	0.174	0.131	0.000	
523.50	0.215	0.179	0.000	
523.75	0.260	0.238	0.000	
524.00	0.309	0.309	0.000	
524.25	0.363	0.393	0.000	
524.50	0.421	0.491	0.000	
524.75	0.483	0.604	0.000	

Elevation	Area (ac)	Capacity (ac-ft)	Discharge (cfs)	Dewater Time (hrs)
525.00	0.550	0.733	0.000	
525.25	0.577	0.874	0.000	
525.50	0.604	1.022	0.000	
525.75	0.632	1.176	0.000	
526.00	0.660	1.338	0.000	
526.25	0.689	1.506	0.000	
526.50	0.719	1.682	0.000	
526.75	0.749	1.866	0.000	
527.00	0.780	2.057	0.000	
527.25	0.812	2.256	0.000	
527.50	0.844	2.462	0.000	
527.75	0.877	2.677	0.000	
528.00	0.910	2.901	0.000	
528.25	0.944	3.133	0.000	
528.50	0.979	3.373	0.000	
528.75	1.014	3.622	0.000	
529.00	1.050	3.880	0.000	
529.25	1.087	4.147	0.000	
529.50	1.124	4.423	0.000	
529.75	1.162	4.709	0.000	
530.00	1.200	5.004	0.000	
530.25	1.238	5.309	0.000	
530.50	1.277	5.623	0.000	
530.75	1.317	5.948	0.000	
531.00	1.357	6.282	0.000	
531.25	1.397	6.626	0.000	
531.50	1.439	6.980	0.000	
531.75	1.481	7.345	0.000	
532.00	1.523	7.721	0.000	
532.25	1.566	8.107	0.000	
532.50	1.610	8.504	0.000	
532.75	1.654	8.912	0.000	
533.00	1.699	9.331	0.000	
533.25	1.745	9.762	0.000	
533.50	1.791	10.204	0.000	
533.75	1.837	10.657	0.000	
534.00	1.885	11.122	0.000	
534.25	1.933	11.600	0.000	
534.50	1.981	12.089	0.000	
534.75	2.030	12.590	0.000	

Elevation	Area (ac)	Capacity (ac-ft)	Discharge (cfs)	Dewater Time (hrs)	
535.00	2.080	13.104	0.000		
535.25	2.112	13.628	0.000		
535.50	2.145	14.160	0.000		
535.75	2.177	14.700	0.000		
536.00	2.210	15.249	0.000		
536.25	2.243	15.805	0.000		
536.50	2.277	16.370	0.000		
536.75	2.310	16.944	0.000		
537.00	2.344	17.526	0.000		
537.25	2.378	18.116	0.000		
537.50	2.413	18.715	0.000		
537.75	2.447	19.322	0.000		
537.80	2.454	19.445	0.000		Spillway #1
538.00	2.482	19.938	3.649	10.80	
538.25	2.517	20.563	8.209	1.40	
538.50	2.553	21.197	12.769	1.80	
538.56	2.562	21.362	14.812	0.80	Peak Stage
538.75	2.588	21.840	20.708		
539.00	2.624	22.491	35.770		
539.25	2.660	23.152	47.502		
539.50	2.697	23.821	68.392		
539.75	2.733	24.500	84.431		
540.00	2.770	25.188	111.421		

Detailed Discharge Table

Elevation (ft)	Emergency Spillway (cfs)	Combined Total Discharge (cfs)
521.00	0.000	0.000
521.25	0.000	0.000
521.50	0.000	0.000
521.75	0.000	0.000
522.00	0.000	0.000
522.25	0.000	0.000
522.50	0.000	0.000
522.75	0.000	0.000
523.00	0.000	0.000
523.25	0.000	0.000

Elevation (ft)	Emergency Spillway (cfs)	Combined Total Discharge (cfs)
523.50	0.000	0.000
523.75	0.000	0.000
524.00	0.000	0.000
524.25	0.000	0.000
524.50	0.000	0.000
524.75	0.000	0.000
525.00	0.000	0.000
525.25	0.000	0.000
525.50	0.000	0.000
525.75	0.000	0.000
526.00	0.000	0.000
526.25	0.000	0.000
526.50	0.000	0.000
526.75	0.000	0.000
527.00	0.000	0.000
527.25	0.000	0.000
527.50	0.000	0.000
527.75	0.000	0.000
528.00	0.000	0.000
528.25	0.000	0.000
528.50	0.000	0.000
528.75	0.000	0.000
529.00	0.000	0.000
529.25	0.000	0.000
529.50	0.000	0.000
529.75	0.000	0.000
530.00	0.000	0.000
530.25	0.000	0.000
530.50	0.000	0.000
530.75	0.000	0.000
531.00	0.000	0.000
531.25	0.000	0.000
531.50	0.000	0.000
531.75	0.000	0.000
532.00	0.000	0.000
532.25	0.000	0.000
532.50	0.000	0.000
532.75	0.000	0.000
533.00	0.000	0.000

Elevation (ft)	Emergency Spillway (cfs)	Combined Total Discharge (cfs)
533.25	0.000	0.000
533.50	0.000	0.000
533.75	0.000	0.000
534.00	0.000	0.000
534.25	0.000	0.000
534.50	0.000	0.000
534.75	0.000	0.000
535.00	0.000	0.000
535.25	0.000	0.000
535.50	0.000	0.000
535.75	0.000	0.000
536.00	0.000	0.000
536.25	0.000	0.000
536.50	0.000	0.000
536.75	0.000	0.000
537.00	0.000	0.000
537.25	0.000	0.000
537.50	0.000	0.000
537.75	0.000	0.000
537.80	0.000	0.000
538.00	3.649	3.649
538.25	8.209	8.209
538.50	12.769	12.769
538.75	20.708	20.708
539.00	35.770	35.770
539.25	47.502	47.502
539.50	68.392	68.392
539.75	84.431	84.431
540.00	111.421	111.421

Subwatershed Hydrology Detail:

Stru #	SWS #	SWS Area (ac)	Time of Conc (hrs)	Musk K (hrs)	Musk X	Curve Number	UHS	Peak Discharge (cfs)	Runoff Volume (ac-ft)
#1	1	16.300	0.220	0.000	0.000	81.000	F	40.92	3.832
	2	2.500	1.000	0.000	0.000	100.000	F	5.77	0.979
	$\sum$	**18.800**						**45.09**	**4.810**

Subwatershed Time of Concentration Details:

Stru #	SWS #	Land Flow Condition	Slope (%)	Vert. Dist. (ft)	Horiz. Dist. (ft)	Velocity (fps)	Time (hrs)
#1	1	5. Nearly bare and untilled, and alluvial valley fans	3.33	5.00	150.00	1.820	0.022
		6. Grassed waterway	0.96	10.00	1,042.00	1.460	0.198
#1	**1**	**Time of Concentration:**					**0.220**

Subwatershed Muskingum Routing Details:

Stru #	SWS #	Land Flow Condition	Slope (%)	Vert. Dist. (ft)	Horiz. Dist. (ft)	Velocity (fps)	Time (hrs)
#1	2	6. Grassed waterway	0.96	10.00	1,042.00	1.460	0.198
#1	**2**	**Muskingum K:**					**0.000**

JIME WALTER RESOURCES, INC.
NO. 4 MINE, P-3260, R-40

DETAILED DESIGN PLANS
SLURRY POND L

Copyright 1998-2010 Pamela L Schwab

No. 4 Mine, P-3260, R-40 Slurry Pond L

Elevation-Area-Capacity Table

Elevation (ft)	Area (ac)	Capacity (ac-ft)
536.00	0.000	0.000
536.50	0.004	0.001
537.00	0.015	0.005
537.50	0.034	0.017
538.00	0.060	0.040
538.50	0.094	0.078
539.00	0.135	0.135
539.50	0.184	0.214
540.00	0.240	0.320
540.50	0.288	0.452
541.00	0.341	0.609
541.50	0.398	0.794
542.00	0.459	1.008
542.50	0.525	1.254
543.00	0.595	1.533
543.50	0.670	1.850
544.00	0.749	2.204
544.50	0.832	2.599
545.00	0.920	3.037
545.50	1.024	3.523
546.00	1.134	4.062
546.50	1.249	4.658
547.00	1.369	5.312
547.50	1.495	6.028
548.00	1.627	6.808
548.50	1.765	7.656
549.00	1.908	8.574
549.50	2.056	9.565
550.00	2.210	10.631
550.50	2.272	11.752
551.00	2.335	12.904
551.50	2.399	14.087
552.00	2.464	15.303
552.50	2.529	16.551
553.00	2.596	17.832
553.50	2.663	19.147

Elevation (ft)	Area (ac)	Capacity (ac-ft)
554.00	2.731	20.495
554.50	2.800	21.878
555.00	2.870	23.295
555.50	2.925	24.744
556.00	2.980	26.220
556.50	3.036	27.724
557.00	3.092	29.256
557.50	3.149	30.816
558.00	3.206	32.405
558.50	3.264	34.022
559.00	3.322	35.668
559.50	3.381	37.344
560.00	3.440	39.049

JIME WALTER RESOURCES, INC.
NO. 4 MINE, P-3260, R-40

SPILLWAY CHANNEL SPECIFICATIONS
SLURRY POND L

The entire control section, transition section and tail ditch section of the emergency spillway will be cut along the centerline of the embankment into compacted fill material or existing spoil and lined as follows:

The entire control section of the emergency spillway will be lined with a minimum of four (4") inches of 3,000 psi concrete extending up the channel side a minimum of 1.54 feet as measured vertically at the control entrance tapering down to 1.26 feet at the end of the control section. The transition section will be lined similarly up the channel side a minimum of 1.26 feet at the beginning of the transition section tapering down to 1.08 feet at the end of the transition section. The entire tail ditch section will be lined similarly up the channel side a minimum of 1.08 feet as measured vertically. All concrete will be reinforced with 10 gauge, 6" x 6" welded wire mesh. Fibermesh may be added to the concrete for additional strength however, the addition of fibermesh shall not be used in place of the required 6" x 6" welded wire.

The gradient of the control section of the emergency spillway will not exceed two (2.0%) percent and not be less than 0.5%. The gradient of the tail ditch section of the emergency spillway will not exceed thirty-three (33%) percent and will not be less than twenty-five (25.0%).

See enclosed SEDCAD 4.0 spillway tail ditch section design, Plan Sheet cross-section and Spillway Profile Sheet for the minimum and maximum emergency spillway construction requirements.

No. 4 Mine, P-3260, R-40 Slurry Pond L Spillway Control Section

Material: Concrete, Rubble

Trapezoidal Channel

Bottom Width (ft)	Left Sideslope Ratio	Right Sideslope Ratio	Slope (%)	Manning's n	Freeboard Depth (ft)	Freeboard % of Depth	Freeboard Mult. x (VxD)
10.00	2.0:1	2.0:1	0.5	0.0220	1.00		

	w/o Freeboard	w/ Freeboard
Design Discharge:	5.07 cfs	
Depth:	0.26 ft	1.26 ft
Top Width:	11.03 ft	15.03 ft
Velocity:	1.87 fps	
X-Section Area:	2.72 sq ft	
Hydraulic Radius:	0.244 ft	
Froude Number:	0.66	

No. 4 Mine, P-3260, R-40 Slurry Pond L Spillway Tail Ditch Section

Material: Concrete, Rubble

Trapezoidal Channel

Bottom Width (ft)	Left Sideslope Ratio	Right Sideslope Ratio	Slope (%)	Manning's n	Freeboard Depth (ft)	Freeboard % of Depth	Freeboard Mult. x (VxD)
10.00	2.0:1	2.0:1	25.0	0.0220	1.00		

	w/o Freeboard	w/ Freeboard
Design Discharge:	5.07 cfs	
Depth:	0.08 ft	1.08 ft
Top Width:	10.32 ft	14.32 ft
Velocity:	6.22 fps	
X-Section Area:	0.82 sq ft	
Hydraulic Radius:	0.079 ft	
Froude Number:	3.90	

JIM WALTER RESOURCES, INC.
NO. 4 MINE, P-3260, R-40
SLURRY POND L SPILLWAY PROFILE

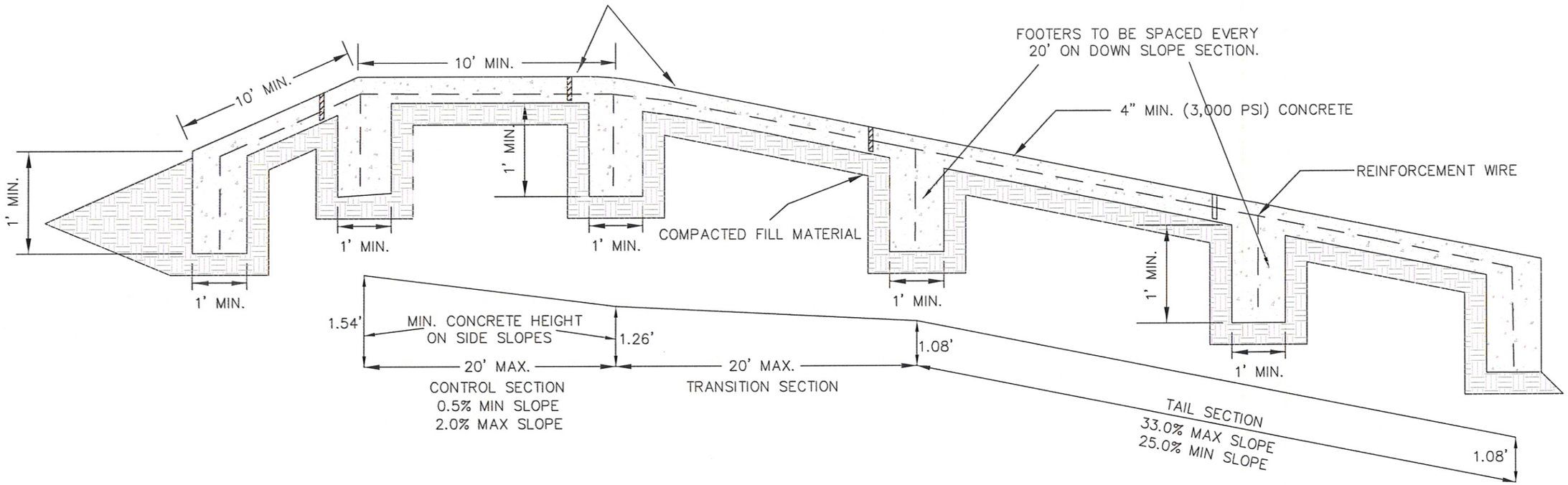

TYPICAL SPILLWAY CROSS-SECTION

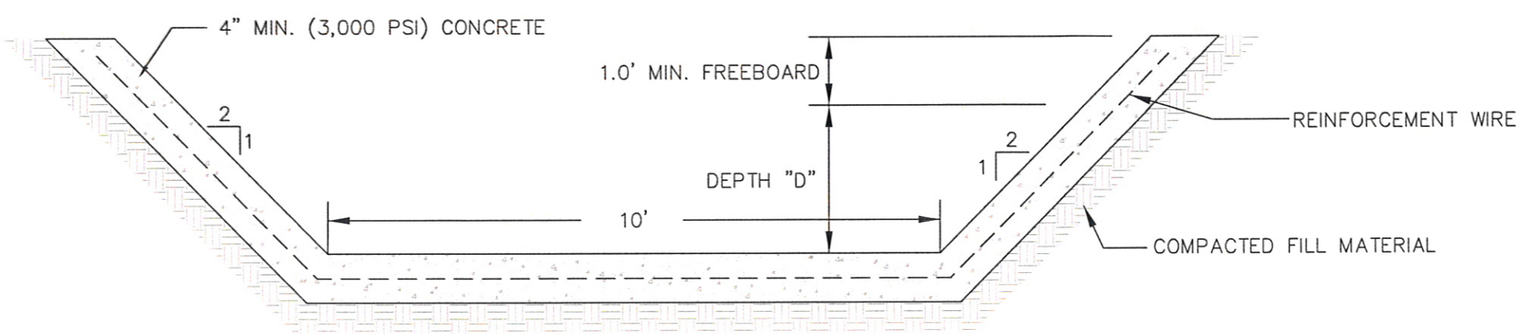

	BEGINNING OF CONTROL SECTION	END OF CONTROL SECTION	END OF TRANSITION SECTION	ENTIRE TAIL SECTION
MAXIMUM FLOW DEPTH "D"	0.54'	0.26'	0.08'	0.08'
FREEBOARD "F"	1.0'	1.0'	1.0'	1.0'
MINIMUM CONCRETE HEIGHT ON SIDE SLOPES	1.54'	1.26	1.08	1.08

mcgehee engineering corp
post office box 3431
jasper, alabama 35502-3431
telephone: (205) 221-0686 fax: 221-7721
email: cw@mcgehee.org

JIME WALTER RESOURCES, INC.
NO. 4 MINE, P-3260, R-40

HYDROLOGY AND SEDIMENTOLOGY PREDICTION
25 YEAR - 6 HOUR PRECIPITATION EVENT
SLURRY POND L

Copyright 1998 -2010 Pamela L Schwab

Jim Walter Resources, Inc.
No. 4 Mine, P-3260, R-40
Slurry Pond L

25 Year 6 Hour Event

Sanford M. Hendon, P.E.

General Information

Storm Information:

Storm Type:	SCS 6 HOUR
Design Storm:	25 yr - 6 hr
Rainfall Depth:	5.000 inches

Structure Networking:

Type	Stru #	(flows into)	Stru #	Musk. K (hrs)	Musk. X	Description
Pond	#1	==>	End	0.000	0.000	Slurry Pond L

#1
Pond

Structure Summary:

		Immediate Contributing Area (ac)	Total Contributing Area (ac)	Peak Discharge (cfs)	Total Runoff Volume (ac-ft)
#1	In	8.070	8.070	19.80	2.38
	Out			5.07	2.37

Structure Detail:

Structure #1 (Pond)

Slurry Pond L

Pond Inputs:

Initial Pool Elev:	553.60 ft
Initial Pool:	19.49 ac-ft

Emergency Spillway

Spillway Elev	Crest Length (ft)	Left Sideslope	Right Sideslope	Bottom Width (ft)
553.60	20.00	2.00:1	2.00:1	10.00

Pond Results:

Peak Elevation:	554.14 ft
Dewater Time:	1.06 days

Dewatering time is calculated from peak stage to lowest spillway

Elevation-Capacity-Discharge Table

Elevation	Area (ac)	Capacity (ac-ft)	Discharge (cfs)	Dewater Time (hrs)
535.00	0.000	0.000	0.000	
535.10	0.000	0.000	0.000	
535.20	0.000	0.000	0.000	
535.30	0.001	0.000	0.000	
535.40	0.002	0.000	0.000	
535.50	0.002	0.000	0.000	
535.60	0.003	0.001	0.000	
535.70	0.005	0.001	0.000	
535.80	0.006	0.002	0.000	
535.90	0.008	0.002	0.000	
536.00	0.010	0.003	0.000	
536.10	0.012	0.004	0.000	
536.20	0.014	0.006	0.000	
536.30	0.016	0.007	0.000	
536.40	0.019	0.009	0.000	
536.50	0.022	0.011	0.000	

Elevation	Area (ac)	Capacity (ac-ft)	Discharge (cfs)	Dewater Time (hrs)
536.60	0.025	0.013	0.000	
536.70	0.028	0.016	0.000	
536.80	0.031	0.019	0.000	
536.90	0.035	0.022	0.000	
537.00	0.038	0.026	0.000	
537.10	0.042	0.030	0.000	
537.20	0.046	0.034	0.000	
537.30	0.051	0.039	0.000	
537.40	0.055	0.044	0.000	
537.50	0.060	0.050	0.000	
537.60	0.065	0.056	0.000	
537.70	0.070	0.063	0.000	
537.80	0.075	0.070	0.000	
537.90	0.081	0.078	0.000	
538.00	0.086	0.086	0.000	
538.10	0.092	0.095	0.000	
538.20	0.098	0.105	0.000	
538.30	0.105	0.115	0.000	
538.40	0.111	0.126	0.000	
538.50	0.118	0.137	0.000	
538.60	0.124	0.149	0.000	
538.70	0.131	0.162	0.000	
538.80	0.139	0.176	0.000	
538.90	0.146	0.190	0.000	
539.00	0.154	0.205	0.000	
539.10	0.161	0.221	0.000	
539.20	0.169	0.237	0.000	
539.30	0.178	0.254	0.000	
539.40	0.186	0.273	0.000	
539.50	0.194	0.292	0.000	
539.60	0.203	0.312	0.000	
539.70	0.212	0.332	0.000	
539.80	0.221	0.354	0.000	
539.90	0.231	0.377	0.000	
540.00	0.240	0.400	0.000	
540.10	0.249	0.425	0.000	
540.20	0.259	0.450	0.000	
540.30	0.268	0.476	0.000	
540.40	0.278	0.504	0.000	
540.50	0.288	0.532	0.000	

Elevation	Area (ac)	Capacity (ac-ft)	Discharge (cfs)	Dewater Time (hrs)
540.60	0.298	0.561	0.000	
540.70	0.309	0.592	0.000	
540.80	0.319	0.623	0.000	
540.90	0.330	0.655	0.000	
541.00	0.341	0.689	0.000	
541.10	0.352	0.724	0.000	
541.20	0.363	0.759	0.000	
541.30	0.374	0.796	0.000	
541.40	0.386	0.834	0.000	
541.50	0.398	0.873	0.000	
541.60	0.410	0.914	0.000	
541.70	0.422	0.955	0.000	
541.80	0.434	0.998	0.000	
541.90	0.447	1.042	0.000	
542.00	0.459	1.087	0.000	
542.10	0.472	1.134	0.000	
542.20	0.485	1.182	0.000	
542.30	0.498	1.231	0.000	
542.40	0.511	1.282	0.000	
542.50	0.525	1.333	0.000	
542.60	0.539	1.386	0.000	
542.70	0.553	1.441	0.000	
542.80	0.567	1.497	0.000	
542.90	0.581	1.554	0.000	
543.00	0.595	1.613	0.000	
543.10	0.610	1.673	0.000	
543.20	0.624	1.735	0.000	
543.30	0.639	1.798	0.000	
543.40	0.654	1.863	0.000	
543.50	0.670	1.929	0.000	
543.60	0.685	1.997	0.000	
543.70	0.701	2.066	0.000	
543.80	0.717	2.137	0.000	
543.90	0.733	2.210	0.000	
544.00	0.749	2.284	0.000	
544.10	0.765	2.359	0.000	
544.20	0.782	2.437	0.000	
544.30	0.798	2.516	0.000	
544.40	0.815	2.596	0.000	
544.50	0.832	2.679	0.000	

Elevation	Area (ac)	Capacity (ac-ft)	Discharge (cfs)	Dewater Time (hrs)
544.60	0.849	2.763	0.000	
544.70	0.867	2.849	0.000	
544.80	0.884	2.936	0.000	
544.90	0.902	3.026	0.000	
545.00	0.920	3.117	0.000	
545.10	0.940	3.210	0.000	
545.20	0.961	3.305	0.000	
545.30	0.982	3.402	0.000	
545.40	1.003	3.501	0.000	
545.50	1.024	3.602	0.000	
545.60	1.045	3.706	0.000	
545.70	1.067	3.811	0.000	
545.80	1.089	3.919	0.000	
545.90	1.111	4.029	0.000	
546.00	1.133	4.141	0.000	
546.10	1.156	4.256	0.000	
546.20	1.179	4.373	0.000	
546.30	1.202	4.492	0.000	
546.40	1.225	4.613	0.000	
546.50	1.249	4.737	0.000	
546.60	1.272	4.863	0.000	
546.70	1.296	4.991	0.000	
546.80	1.320	5.122	0.000	
546.90	1.345	5.255	0.000	
547.00	1.369	5.391	0.000	
547.10	1.394	5.529	0.000	
547.20	1.419	5.670	0.000	
547.30	1.444	5.813	0.000	
547.40	1.470	5.959	0.000	
547.50	1.495	6.107	0.000	
547.60	1.521	6.258	0.000	
547.70	1.548	6.411	0.000	
547.80	1.574	6.567	0.000	
547.90	1.600	6.726	0.000	
548.00	1.627	6.887	0.000	
548.10	1.654	7.051	0.000	
548.20	1.682	7.218	0.000	
548.30	1.709	7.388	0.000	
548.40	1.737	7.560	0.000	
548.50	1.765	7.735	0.000	

Elevation	Area (ac)	Capacity (ac-ft)	Discharge (cfs)	Dewater Time (hrs)
548.60	1.793	7.913	0.000	
548.70	1.821	8.094	0.000	
548.80	1.850	8.277	0.000	
548.90	1.878	8.464	0.000	
549.00	1.908	8.653	0.000	
549.10	1.937	8.845	0.000	
549.20	1.966	9.040	0.000	
549.30	1.996	9.238	0.000	
549.40	2.026	9.440	0.000	
549.50	2.056	9.644	0.000	
549.60	2.086	9.851	0.000	
549.70	2.117	10.061	0.000	
549.80	2.148	10.274	0.000	
549.90	2.179	10.490	0.000	
550.00	2.210	10.710	0.000	
550.10	2.222	10.931	0.000	
550.20	2.235	11.154	0.000	
550.30	2.247	11.378	0.000	
550.40	2.260	11.604	0.000	
550.50	2.272	11.830	0.000	
550.60	2.285	12.058	0.000	
550.70	2.297	12.287	0.000	
550.80	2.310	12.518	0.000	
550.90	2.322	12.749	0.000	
551.00	2.335	12.982	0.000	
551.10	2.348	13.216	0.000	
551.20	2.361	13.452	0.000	
551.30	2.373	13.688	0.000	
551.40	2.386	13.926	0.000	
551.50	2.399	14.166	0.000	
551.60	2.412	14.406	0.000	
551.70	2.425	14.648	0.000	
551.80	2.438	14.891	0.000	
551.90	2.451	15.136	0.000	
552.00	2.464	15.381	0.000	
552.10	2.477	15.628	0.000	
552.20	2.490	15.877	0.000	
552.30	2.503	16.126	0.000	
552.40	2.516	16.377	0.000	
552.50	2.529	16.629	0.000	

Elevation	Area (ac)	Capacity (ac-ft)	Discharge (cfs)	Dewater Time (hrs)	
552.60	2.542	16.883	0.000		
552.70	2.556	17.138	0.000		
552.80	2.569	17.394	0.000		
552.90	2.582	17.652	0.000		
553.00	2.596	17.911	0.000		
553.10	2.609	18.171	0.000		
553.20	2.623	18.432	0.000		
553.30	2.636	18.695	0.000		
553.40	2.649	18.960	0.000		
553.50	2.663	19.225	0.000		
553.60	2.677	19.492	0.000		Spillway #1
553.70	2.690	19.761	0.366	8.87*	
553.80	2.704	20.030	0.732	6.20	
553.90	2.717	20.301	1.098	3.65	
554.00	2.731	20.574	1.464	2.55	
554.10	2.745	20.847	1.830	2.30	
554.14	2.750	20.958	5.074	1.85	Peak Stage
554.20	2.759	21.123	9.889		
554.30	2.772	21.399	12.769		
554.40	2.786	21.677	16.759		
554.50	2.800	21.957	20.708		
554.60	2.814	22.237	25.483		
554.70	2.828	22.519	30.444		
554.80	2.842	22.803	35.770		
554.90	2.856	23.088	41.456		
555.00	2.870	23.374	47.502		
555.10	2.881	23.661	53.905		
555.20	2.892	23.950	60.955		
555.30	2.903	24.240	68.392		
555.40	2.914	24.531	76.217		
555.50	2.925	24.823	84.431		
555.60	2.936	25.116	93.036		
555.70	2.947	25.410	102.032		
555.80	2.958	25.705	111.421		
555.90	2.969	26.001	121.206		
556.00	2.980	26.299	131.389		
556.10	2.991	26.597	141.972		
556.20	3.002	26.897	152.957		
556.30	3.013	27.198	164.347		
556.40	3.024	27.500	176.144		

Elevation	Area (ac)	Capacity (ac-ft)	Discharge (cfs)	Dewater Time (hrs)
556.50	3.036	27.803	188.351	
556.60	3.047	28.107	200.972	
556.70	3.058	28.412	214.007	
556.80	3.069	28.718	227.462	
556.90	3.081	29.026	241.337	
557.00	3.092	29.334	255.637	
557.10	3.103	29.644	270.364	
557.20	3.114	29.955	285.521	
557.30	3.126	30.267	301.111	
557.40	3.137	30.580	317.136	
557.50	3.149	30.895	333.601	
557.60	3.160	31.210	350.507	
557.70	3.171	31.527	367.859	
557.80	3.183	31.844	385.658	
557.90	3.194	32.163	403.908	
558.00	3.206	32.483	422.612	
558.10	3.217	32.804	441.772	
558.20	3.229	33.127	461.393	
558.30	3.240	33.450	481.476	
558.40	3.252	33.775	502.024	
558.50	3.264	34.100	523.042	
558.60	3.275	34.427	544.530	
558.70	3.287	34.755	566.494	
558.80	3.298	35.085	588.934	
558.90	3.310	35.415	611.856	
559.00	3.322	35.747	635.260	
559.10	3.334	36.079	659.150	
559.20	3.345	36.414	683.530	
559.30	3.357	36.749	708.401	
559.40	3.369	37.085	733.768	
559.50	3.381	37.422	759.631	
559.60	3.392	37.761	785.996	
559.70	3.404	38.101	812.863	
559.80	3.416	38.442	840.237	
559.90	3.428	38.784	868.119	
560.00	3.440	39.128	896.513	

**Designates time(s) to dewater have been extrapolated beyond the 50 hour hydrograph limit.*

Detailed Discharge Table

Elevation (ft)	Emergency Spillway (cfs)	Combined Total Discharge (cfs)
535.00	0.000	0.000
535.10	0.000	0.000
535.20	0.000	0.000
535.30	0.000	0.000
535.40	0.000	0.000
535.50	0.000	0.000
535.60	0.000	0.000
535.70	0.000	0.000
535.80	0.000	0.000
535.90	0.000	0.000
536.00	0.000	0.000
536.10	0.000	0.000
536.20	0.000	0.000
536.30	0.000	0.000
536.40	0.000	0.000
536.50	0.000	0.000
536.60	0.000	0.000
536.70	0.000	0.000
536.80	0.000	0.000
536.90	0.000	0.000
537.00	0.000	0.000
537.10	0.000	0.000
537.20	0.000	0.000
537.30	0.000	0.000
537.40	0.000	0.000
537.50	0.000	0.000
537.60	0.000	0.000
537.70	0.000	0.000
537.80	0.000	0.000
537.90	0.000	0.000
538.00	0.000	0.000
538.10	0.000	0.000
538.20	0.000	0.000
538.30	0.000	0.000
538.40	0.000	0.000
538.50	0.000	0.000
538.60	0.000	0.000
538.70	0.000	0.000
538.80	0.000	0.000

Elevation (ft)	Emergency Spillway (cfs)	Combined Total Discharge (cfs)
538.90	0.000	0.000
539.00	0.000	0.000
539.10	0.000	0.000
539.20	0.000	0.000
539.30	0.000	0.000
539.40	0.000	0.000
539.50	0.000	0.000
539.60	0.000	0.000
539.70	0.000	0.000
539.80	0.000	0.000
539.90	0.000	0.000
540.00	0.000	0.000
540.10	0.000	0.000
540.20	0.000	0.000
540.30	0.000	0.000
540.40	0.000	0.000
540.50	0.000	0.000
540.60	0.000	0.000
540.70	0.000	0.000
540.80	0.000	0.000
540.90	0.000	0.000
541.00	0.000	0.000
541.10	0.000	0.000
541.20	0.000	0.000
541.30	0.000	0.000
541.40	0.000	0.000
541.50	0.000	0.000
541.60	0.000	0.000
541.70	0.000	0.000
541.80	0.000	0.000
541.90	0.000	0.000
542.00	0.000	0.000
542.10	0.000	0.000
542.20	0.000	0.000
542.30	0.000	0.000
542.40	0.000	0.000
542.50	0.000	0.000
542.60	0.000	0.000
542.70	0.000	0.000

Elevation (ft)	Emergency Spillway (cfs)	Combined Total Discharge (cfs)
542.80	0.000	0.000
542.90	0.000	0.000
543.00	0.000	0.000
543.10	0.000	0.000
543.20	0.000	0.000
543.30	0.000	0.000
543.40	0.000	0.000
543.50	0.000	0.000
543.60	0.000	0.000
543.70	0.000	0.000
543.80	0.000	0.000
543.90	0.000	0.000
544.00	0.000	0.000
544.10	0.000	0.000
544.20	0.000	0.000
544.30	0.000	0.000
544.40	0.000	0.000
544.50	0.000	0.000
544.60	0.000	0.000
544.70	0.000	0.000
544.80	0.000	0.000
544.90	0.000	0.000
545.00	0.000	0.000
545.10	0.000	0.000
545.20	0.000	0.000
545.30	0.000	0.000
545.40	0.000	0.000
545.50	0.000	0.000
545.60	0.000	0.000
545.70	0.000	0.000
545.80	0.000	0.000
545.90	0.000	0.000
546.00	0.000	0.000
546.10	0.000	0.000
546.20	0.000	0.000
546.30	0.000	0.000
546.40	0.000	0.000
546.50	0.000	0.000
546.60	0.000	0.000

Elevation (ft)	Emergency Spillway (cfs)	Combined Total Discharge (cfs)
546.70	0.000	0.000
546.80	0.000	0.000
546.90	0.000	0.000
547.00	0.000	0.000
547.10	0.000	0.000
547.20	0.000	0.000
547.30	0.000	0.000
547.40	0.000	0.000
547.50	0.000	0.000
547.60	0.000	0.000
547.70	0.000	0.000
547.80	0.000	0.000
547.90	0.000	0.000
548.00	0.000	0.000
548.10	0.000	0.000
548.20	0.000	0.000
548.30	0.000	0.000
548.40	0.000	0.000
548.50	0.000	0.000
548.60	0.000	0.000
548.70	0.000	0.000
548.80	0.000	0.000
548.90	0.000	0.000
549.00	0.000	0.000
549.10	0.000	0.000
549.20	0.000	0.000
549.30	0.000	0.000
549.40	0.000	0.000
549.50	0.000	0.000
549.60	0.000	0.000
549.70	0.000	0.000
549.80	0.000	0.000
549.90	0.000	0.000
550.00	0.000	0.000
550.10	0.000	0.000
550.20	0.000	0.000
550.30	0.000	0.000
550.40	0.000	0.000
550.50	0.000	0.000

Elevation (ft)	Emergency Spillway (cfs)	Combined Total Discharge (cfs)
550.60	0.000	0.000
550.70	0.000	0.000
550.80	0.000	0.000
550.90	0.000	0.000
551.00	0.000	0.000
551.10	0.000	0.000
551.20	0.000	0.000
551.30	0.000	0.000
551.40	0.000	0.000
551.50	0.000	0.000
551.60	0.000	0.000
551.70	0.000	0.000
551.80	0.000	0.000
551.90	0.000	0.000
552.00	0.000	0.000
552.10	0.000	0.000
552.20	0.000	0.000
552.30	0.000	0.000
552.40	0.000	0.000
552.50	0.000	0.000
552.60	0.000	0.000
552.70	0.000	0.000
552.80	0.000	0.000
552.90	0.000	0.000
553.00	0.000	0.000
553.10	0.000	0.000
553.20	0.000	0.000
553.30	0.000	0.000
553.40	0.000	0.000
553.50	0.000	0.000
553.60	0.000	0.000
553.70	0.366	0.366
553.80	0.732	0.732
553.90	1.098	1.098
554.00	1.464	1.464
554.10	1.830	1.830
554.20	9.889	9.889
554.30	12.769	12.769
554.40	16.759	16.759

Elevation (ft)	Emergency Spillway (cfs)	Combined Total Discharge (cfs)
554.50	20.708	20.708
554.60	25.483	25.483
554.70	30.444	30.444
554.80	35.770	35.770
554.90	41.456	41.456
555.00	47.502	47.502
555.10	53.905	53.905
555.20	60.955	60.955
555.30	68.392	68.392
555.40	76.217	76.217
555.50	84.431	84.431
555.60	93.036	93.036
555.70	102.032	102.032
555.80	111.421	111.421
555.90	121.206	121.206
556.00	131.389	131.389
556.10	141.972	141.972
556.20	152.957	152.957
556.30	164.347	164.347
556.40	176.144	176.144
556.50	188.351	188.351
556.60	200.972	200.972
556.70	214.007	214.007
556.80	227.462	227.462
556.90	241.337	241.337
557.00	255.637	255.637
557.10	270.364	270.364
557.20	285.521	285.521
557.30	301.111	301.111
557.40	317.136	317.136
557.50	333.601	333.601
557.60	350.507	350.507
557.70	367.859	367.859
557.80	385.658	385.658
557.90	403.908	403.908
558.00	422.612	422.612
558.10	441.772	441.772
558.20	461.393	461.393
558.30	481.476	481.476

Elevation (ft)	Emergency Spillway (cfs)	Combined Total Discharge (cfs)
558.40	502.024	502.024
558.50	523.042	523.042
558.60	544.530	544.530
558.70	566.494	566.494
558.80	588.934	588.934
558.90	611.856	611.856
559.00	635.260	635.260
559.10	659.150	659.150
559.20	683.530	683.530
559.30	708.401	708.401
559.40	733.768	733.768
559.50	759.631	759.631
559.60	785.996	785.996
559.70	812.863	812.863
559.80	840.237	840.237
559.90	868.119	868.119
560.00	896.513	896.513

Subwatershed Hydrology Detail:

Stru #	SWS #	SWS Area (ac)	Time of Conc (hrs)	Musk K (hrs)	Musk X	Curve Number	UHS	Peak Discharge (cfs)	Runoff Volume (ac-ft)
#1	1	5.400	0.120	0.000	0.000	81.000	F	16.14	1.336
	2	2.670	1.000	0.000	0.000	100.000	F	6.16	1.045
	$\sum$	**8.070**						**19.80**	**2.381**

Subwatershed Time of Concentration Details:

Stru #	SWS #	Land Flow Condition	Slope (%)	Vert. Dist. (ft)	Horiz. Dist. (ft)	Velocity (fps)	Time (hrs)
#1	1	5. Nearly bare and untilled, and alluvial valley fans	3.33	5.00	150.00	1.820	0.022
		6. Grassed waterway	0.96	10.00	1,042.00	1.460	0.198
#1	**1**	**Time of Concentration:**					**0.120**

Subwatershed Muskingum Routing Details:

Stru #	SWS #	Land Flow Condition	Slope (%)	Vert. Dist. (ft)	Horiz. Dist. (ft)	Velocity (fps)	Time (hrs)
#1	2	6. Grassed waterway	0.96	10.00	1,042.00	1.460	0.198
#1	**2**	**Muskingum K:**					**0.000**

JIME WALTER RESOURCES, INC.
NO. 4 MINE, P-3260, R-40

STABILITY ANALYSIS

STABILITY ANALYSIS PROCEDURE

The computer program used to analyze the slope stability was the REAME Slope Stability Program as developed by Dr. Yang H. Huang, P.E. of the University of Kentucky. A static case and seismic case was performed on the embankment.

FOUNDATION INVESTIGATION

Slurry Ponds G and L will be constructed in an abandoned mine area that was left un-reclaimed for use as Rock Dump No. 6 for JWR's No. 4 Mine. The embankments will be constructed on spoil and of spoil. Bottom of pit elevation was determined from exploration mapping compiled by the Drummond Company, Inc. Depth of spoil at the location of the embankments is 11' for Slurry Pond G and 19' for Slurry Pond L.

The adjacent spoil will be used to construct the embankments. The foundation material is also spoil as described above. All undesirable material will be removed from the entire footprint of the embankment. The entire footprint will be excavated to either the stiff base (pit bottom) OR to a level of the spoil material suitable to be used as the embankment foundation. The entire footprint of the embankment will be backfilled and compacted with spoil once all undesirable material has been excavated.

The adjacent spoil will be used to construct the embankments. The foundation material is also spoil as described above.

SOIL PROPERTIES

The foundation and embankment material soil properties for Slurry Ponds G and L spoil.

MATERIAL	COHESION (psf)	INTERNAL ANGLE OF FRICTION	EFFECTIVE DENSITY (pcf)
Slurry Pond G and L			
Foundation (Spoil)	50.00	30.00	135.00
Embankment (Spoil)	50.00	30.00	135.00

ANALYSIS RESULTS

EMBANKMENT	STATIC SAFETY FACTOR
Slurry Pond G	1.447
Slurry Pond L	1.429

These results indicate static and dynamic factors of safety in excess of those required by ASMC regulations. The computer outputs for the above safety factors are included within this report.

JIME WALTER RESOURCES, INC.
NO. 4 MINE, P-3260, R-40

STABILITY ANALYSIS - COMPUTER OUTPUT
SLURRY POND G
STATIC

REAME (Rotational Equilibrium Analysis of Multilayered Embankments)

Jim Walter Resources, Inc.
No. 4 Mine, P-3260, R-40
Slurry Pond G
Static Case

Slurry Pond G

Number of cases to be analyzed 1

Case Number 1

Number of boundary lines= 4
Number of points on boundary lines are: 2 2 3 7

On boundary line no. 1 Point no. and coordinates are:
1 .000 5.000 2 500.000 .000

On boundary line no. 2 Point no. and coordinates are:
1 200.000 18.000 2 322.938 16.771

On boundary line no. 3 Point no. and coordinates are:
1 .000 20.000 2 200.000 18.000 3 250.400 34.800

On boundary line no. 4 Point no. and coordinates are:
1 .000 34.800 2 250.400 34.800 3 248.750 37.500 4 260.750 37.500 5 307.793 21.819
6 322.938 16.771 7 500.000 15.000

Line no. and slope of each segment are:
1 -.010
2 -.010
3 -.010 .333
4 .000 -1.636 .000 -.333 -.333 -.010

No. of radius control zones= 1 Plot or no plot= 1 No. of seepage cases= 1

Total no. of lines at bottom of radius control zones is: 1

For rad. cont. zone no. 1 Radius decrement= .000 No. of Circles= 5 Id no. for first circle=, 1
Line no.= 1 Begin pt. no.= 1 End pt. no.= 2

Soil no.	Cohesion	F. angle	Unit wt.
1	50.000	30.000	135.000
2	50.000	30.000	135.000

3 .000 .000 62.400

Seismic coefficient= .000 Min. depth of tallest slice= .000 Unit weight of water= 62.400

The factors of safety are determined by the SIMPLIFIED BISHOP method

NSPG= 1 NSRCH= 0 No. of slices= 10 No. of add. radii= 2

No. of points on water table for each case= 6

Under seepage condition 1point no. and coordinates of water table are:
1 .000 34.800 2 250.400 34.800 3 271.537 29.932 4 307.793 21.819 5 322.938 16.771
6 500.000 15.000

point1=(262.000, 59.000) point2=(262.000, 39.000) point3=(324.000, 39.000) NJ= 2 NI= 2
Automatic search will follow after grid with XINC= 10.000 and YINC= 10.000

****WARNING AT NEXT CENTER**** When radius is 26.214
center of circle lies below ground line or circle does not intercept ground line properly, or the circle cuts the slope very slightly, so a large factor of safety is assigned.

At point (262.000, 59.000) under seepage 1,the radius and the corresponding factor of safety are:
56.617 9.534 49.601 9.633 42.585 9.906 35.569 10.091 28.552 8.907
26.214********** 23.875 7.434
Lowest factor of safety= 7.434 and occurs at radius = 23.875

At point (262.000, 49.000) under seepage 1,the radius and the corresponding factor of safety are:
46.618 10.100 39.608 10.224 32.598 10.070 25.588 9.398 18.578 6.462
16.241 5.734 13.904 6.445
Lowest factor of safety= 5.734 and occurs at radius = 16.241

****WARNING AT NEXT CENTER**** When radius is 4.138
center of circle lies below ground line or circle does not intercept ground line properly, or the circle cuts the slope very slightly, so a large factor of safety is assigned.

At point (262.000, 39.000) under seepage 1,the radius and the corresponding factor of safety are:
36.618 11.315 29.658 11.676 22.698 11.012 15.738 8.798 8.778 6.470
6.458 6.539 4.138**********
Lowest factor of safety= 6.470 and occurs at radius = 8.778

At point (293.000, 59.000) under seepage 1,the radius and the corresponding factor of safety are:
56.927 2.008 51.661 1.802 46.394 1.679 41.128 1.674 35.861 1.967
44.639 1.673 42.883 1.660 39.372 1.714 37.617 1.804
Lowest factor of safety= 1.660 and occurs at radius = 42.883

At point (293.000, 49.000) under seepage 1,the radius and the corresponding factor of safety are:
46.928 1.975 41.764 1.821 36.600 1.754 31.436 1.760 26.272 2.024
40.042 1.788 38.321 1.775 34.879 1.747 33.157 1.743
Lowest factor of safety= 1.743 and occurs at radius = 33.157

At point (293.000, 39.000) under seepage 1,the radius and the corresponding factor of safety are:

36.928 2.152 31.867 2.046 26.805 2.007 21.744 2.007 16.683 2.190
30.180 2.024 28.493 2.006 25.118 1.985 23.431 1.990
Lowest factor of safety= 1.985 and occurs at radius = 25.118

At point (324.000, 59.000) under seepage 1,the radius and the corresponding factor of safety are:
57.237 2.362 53.869 2.240 50.501 2.109 47.134 1.995 43.766 1.945
42.643 2.020 41.521 2.538
Lowest factor of safety= 1.945 and occurs at radius = 43.766

At point (324.000, 49.000) under seepage 1,the radius and the corresponding factor of safety are:
47.238 2.568 43.972 2.435 40.707 2.290 37.442 2.151 34.176 2.105
33.088 2.207 32.000 2.532
Lowest factor of safety= 2.105 and occurs at radius = 34.176

At point (324.000, 39.000) under seepage 1,the radius and the corresponding factor of safety are:
37.238 2.930 34.075 2.751 30.913 2.595 27.750 2.430 24.587 2.400
23.533 2.528 22.478 3.145
Lowest factor of safety= 2.400 and occurs at radius = 24.587

For piezometric line No. 1

At point (293.000, 59.000) ,RADIUS 42.883
the minimum factor of safety is 1.660

At point (293.000, 59.000) under seepage 1,the radius and the corresponding factor of safety are:
56.927 2.008 51.661 1.802 46.394 1.679 41.128 1.674 35.861 1.967
44.639 1.673 42.883 1.660 39.372 1.714 37.617 1.804
Lowest factor of safety= 1.660 and occurs at radius = 42.883

At point (303.000, 59.000) under seepage 1,the radius and the corresponding factor of safety are:
57.027 1.799 52.373 1.631 47.719 1.519 43.065 1.536 38.411 1.797
50.822 1.587 49.271 1.544 46.168 1.512 44.617 1.515
Lowest factor of safety= 1.512 and occurs at radius = 46.168

At point (313.000, 59.000) under seepage 1,the radius and the corresponding factor of safety are:
57.127 1.913 53.086 1.755 49.044 1.609 45.003 1.484 40.961 1.649
47.697 1.561 46.350 1.515 43.655 1.473 42.308 1.528
Lowest factor of safety= 1.473 and occurs at radius = 43.655

At point (323.000, 59.000) under seepage 1,the radius and the corresponding factor of safety are:
57.227 2.303 53.798 2.175 50.369 2.035 46.940 1.910 43.511 1.839
42.368 1.887 41.225 2.538
Lowest factor of safety= 1.839 and occurs at radius = 43.511

At point (313.000, 69.000) under seepage 1,the radius and the corresponding factor of safety are:
67.127 1.872 62.983 1.701 58.839 1.569 54.695 1.467 50.550 1.680
57.457 1.527 56.076 1.489 53.313 1.469 51.932 1.541
Lowest factor of safety= 1.467 and occurs at radius = 54.695

At point (313.000, 79.000) under seepage 1,the radius and the corresponding factor of safety are:
77.126 1.866 72.880 1.693 68.633 1.545 64.386 1.461 60.140 1.706
67.217 1.507 65.802 1.473 62.971 1.475 61.555 1.561
Lowest factor of safety= 1.461 and occurs at radius = 64.386

****WARNING AT NEXT CENTER**** When radius is 82.777
center of circle lies below ground line or circle does not intercept ground line properly, or the circle cuts the slope very slightly, so a large factor of safety is assigned.

At point (313.000, 89.000) under seepage 1,the radius and the corresponding factor of safety are:
87.126 1.936 82.777**********
Lowest factor of safety= 1.936 and occurs at radius = 87.126

At point (323.000, 79.000) under seepage 1,the radius and the corresponding factor of safety are:
77.226 2.082 73.592 1.966 69.958 1.855 66.324 1.742 62.690 1.712
61.478 1.884 60.267 2.697
Lowest factor of safety= 1.712 and occurs at radius = 62.690

At point (303.000, 79.000) under seepage 1,the radius and the corresponding factor of safety are:
77.026 1.931 72.167 1.690 67.308 1.514 62.449 1.517 57.590 1.827
70.547 1.620 68.928 1.556 65.688 1.498 64.069 1.497
Lowest factor of safety= 1.497 and occurs at radius = 64.069

At point (315.500, 79.000) under seepage 1,the radius and the corresponding factor of safety are:
77.151 1.889 73.058 1.735 68.964 1.592 64.871 1.491 60.777 1.680
67.600 1.552 66.235 1.519 63.506 1.485 62.142 1.539
Lowest factor of safety= 1.485 and occurs at radius = 63.506

At point (310.500, 79.000) under seepage 1,the radius and the corresponding factor of safety are:
77.101 1.874 72.701 1.658 68.302 1.512 63.902 1.447 59.502 1.732
66.835 1.478 65.369 1.452 62.436 1.493 60.969 1.586
Lowest factor of safety= 1.447 and occurs at radius = 63.902

****WARNING AT NEXT CENTER**** When radius is 72.523
center of circle lies below ground line or circle does not intercept ground line properly, or the circle cuts the slope very slightly, so a large factor of safety is assigned.

At point (308.000, 79.000) under seepage 1,the radius and the corresponding factor of safety are:
77.076 1.884 72.523**********
Lowest factor of safety= 1.884 and occurs at radius = 77.076

At point (310.500, 81.500) under seepage 1,the radius and the corresponding factor of safety are:
79.601 1.891 75.176 1.665 70.750 1.516 66.325 1.447 61.900 1.739
69.275 1.477 67.800 1.454 64.850 1.497 63.375 1.591
Lowest factor of safety= 1.447 and occurs at radius = 66.325

JIME WALTER RESOURCES, INC.
NO. 4 MINE, P-3260, R-40

At point (310.500, 76.500) under seepage 1,the radius and the corresponding factor of safety are:

74.601	1.856	70.227	1.658	65.853	1.512	61.479	1.448	57.105	1.725
64.395	1.478	62.937	1.452	60.021	1.490	58.563	1.580		

Lowest factor of safety= 1.448 and occurs at radius = 61.479

For piezometric line No. 1

At point (310.500, 79.000) ,RADIUS 63.902
the minimum factor of safety is 1.447

Cross section in distorted scale. Numerals indicate boundary line no. If there area more than 10 bound. lines, alphabets will then be used. P indicates Piezometric line. If a portion of Piezometric line coincides with the ground or another boundary line, only the ground or boundary line will be shown. X indicates intersection of two boundary lines. * indicates failure surface.

The minimum factor of safety is 1.447

JIME WALTER RESOURCES, INC.
NO. 4 MINE, P-3260, R-40

```
4.000E+01 X+++++++++X++++++++++X++++++++++X++++++++++X++++++++++X
          +  +                          +
          +  +                          +
          +  +          4               +
          +  +                          +
3.600E+01 X   X  +      +      +      +      X
          +  +          *               +
          +  4444444444444444X                 +
          +  +                          +
          +  +          4               +
3.200E+01 X   X  +      +      +      +      X
          +  +                          +
          +  +                          +
          +  +          P               +
          +  +         3                +
2.800E+01 X   X  +      +      +      +      X
          +  +          4               +
          +  +                          +
          +  +          P               +
          +  +                          +
2.400E+01 X   X  +      +      +      +      X
          +  +         3  *             +
          +  +                          +
          +  +          4               +
          +  +                          +
2.000E+01 X   X3333+      +      +      +      X
          +  +  3333                    +
          +  +     3333                 +
          +  +        X222222              +
          +  +           *X44444           +
1.600E+01 X   X  +      +      +44444  +      X
          +  +                 4        +
          +  +                          +
          +  +                          +
          +  +                          +
1.200E+01 X   X  +      +      +      +      X
          +  +                          +
          +  +                          +
          +  +                          +
          +  +                          +
8.000E+00 X   X  +      +      +      +      X
          +  +                          +
          +  +                          +
          +  +                          +
          +  111111                     +
4.000E+00 X   X  +11111  +      +      +      X
          +  +      11111               +
          +  +         11111            +
          +  +            11111         +
          +  +               11111      +
 .000E+00 X++++++++X++++++++X++++++++X+++++1+++X++++++++X
0      -8.00E+01  8.00E+01  2.40E+02  4.00E+02  5.60E+02  7.20E+02
```

JIME WALTER RESOURCES, INC.
NO. 4 MINE, P-3260, R-40

STABILITY ANALYSIS - COMPUTER OUTPUT
SLURRY POND L
STATIC

REAME (Rotational Equilibrium Analysis of Multilayered Embankments)

Jim Walter Resources, Inc.
No. 4 Mine, P-3260, R-40
Slurry Pond L
Static Case

Slurry Pond L

Number of cases to be analyzed 1

Case Number 1

Number of boundary lines= 4
Number of points on boundary lines are: 2 2 3 7

On boundary line no. 1 Point no. and coordinates are:
1 .000 5.000 2 500.000 .000

On boundary line no. 2 Point no. and coordinates are:
1 200.000 18.000 2 326.340 16.737

On boundary line no. 3 Point no. and coordinates are:
1 .000 20.000 2 200.000 18.000 3 252.800 35.600

On boundary line no. 4 Point no. and coordinates are:
1 .000 35.600 2 252.800 35.600 3 250.250 38.100 4 262.250 38.100 5 310.495 22.018
6 326.340 16.737 7 500.000 15.000

Line no. and slope of each segment are:
1 -.010
2 -.010
3 -.010 .333
4 .000 -.980 .000 -.333 -.333 -.010

No. of radius control zones= 1 Plot or no plot= 1 No. of seepage cases= 1

Total no. of lines at bottom of radius control zones is: 1

For rad. cont. zone no. 1 Radius decrement= .000 No. of Circles= 5 Id no. for first circle=, 1
Line no.= 1 Begin pt. no.= 1 End pt. no.= 2

Soil no.	Cohesion	F. angle	Unit wt.
1	50.000	30.000	135.000
2	50.000	30.000	135.000
3	.000	.000	62.400

Seismic coefficient= .000 Min. depth of tallest slice= .000 Unit weight of water= 62.400

The factors of safety are determined by the SIMPLIFIED BISHOP method

NSPG= 1 NSRCH= 0 No. of slices= 10 No. of add. radii= 2

No. of points on water table for each case= 6

Under seepage condition 1point no. and coordinates of water table are:
1 .000 35.600 2 252.800 35.600 3 273.727 30.507 4 310.495 22.018 5 326.340 16.737
6 500.000 15.000

point1=(263.000, 59.000) point2=(263.000, 39.000) point3=(327.000, 39.000) NJ= 2 NI= 2
Automatic search will follow after grid with XINC= 10.000 and YINC= 10.000

At point (263.000, 59.000) under seepage 1,the radius and the corresponding factor of safety are:
56.627 10.188 49.484 10.403 42.342 10.912 35.199 11.633 28.056 11.069
25.675 9.090 23.294 7.875
Lowest factor of safety= 7.875 and occurs at radius = 23.294

At point (263.000, 49.000) under seepage 1,the radius and the corresponding factor of safety are:
46.628 10.910 39.487 11.163 32.347 11.329 25.207 11.182 18.066 8.187
15.686 6.343 13.306 6.987
Lowest factor of safety= 6.343 and occurs at radius = 15.686

****WARNING AT NEXT CENTER**** When radius is 3.460
center of circle lies below ground line or circle does not intercept ground line properly, or the circle cuts the slope very slightly, so a large factor of safety is assigned.

At point (263.000, 39.000) under seepage 1,the radius and the corresponding factor of safety are:
36.628 12.420 29.521 13.198 22.413 13.033 15.306 11.198 8.198 7.228
5.829 7.672 3.460**********
Lowest factor of safety= 7.228 and occurs at radius = 8.198

At point (295.000, 59.000) under seepage 1,the radius and the corresponding factor of safety are:
56.947 1.983 51.595 1.794 46.242 1.665 40.889 1.659 35.537 1.942
44.458 1.653 42.674 1.646 39.105 1.696 37.321 1.782
Lowest factor of safety= 1.646 and occurs at radius = 42.674

At point (295.000, 49.000) under seepage 1,the radius and the corresponding factor of safety are:
46.948 1.970 41.698 1.813 36.448 1.752 31.197 1.758 25.947 2.001
39.948 1.787 38.198 1.773 34.697 1.739 32.947 1.743
Lowest factor of safety= 1.739 and occurs at radius = 34.697

At point (295.000, 39.000) under seepage 1,the radius and the corresponding factor of safety are:
36.948 2.166 31.801 2.057 26.653 2.016 21.506 2.011 16.358 2.181
24.937 1.991 23.221 2.000 19.790 2.035 18.074 2.074
Lowest factor of safety= 1.991 and occurs at radius = 24.937

At point (327.000, 59.000) under seepage 1,the radius and the corresponding factor of safety are:
57.267 2.326 53.874 2.201 50.482 2.065 47.089 1.944 43.696 1.888
42.565 1.950 41.434 2.516
Lowest factor of safety= 1.888 and occurs at radius = 43.696

At point (327.000, 49.000) under seepage 1,the radius and the corresponding factor of safety are:

47.268	2.526	43.977	2.389	40.687	2.239	37.397	2.094	34.107	2.031
33.010	2.121	31.913	2.518						

Lowest factor of safety= 2.031 and occurs at radius = 34.107

At point (327.000, 39.000) under seepage 1,the radius and the corresponding factor of safety are:

37.268	2.876	34.080	2.695	30.893	2.530	27.705	2.354	24.517	2.301
23.455	2.410	22.392	2.937						

Lowest factor of safety= 2.301 and occurs at radius = 24.517

For piezometric line No. 1

At point (295.000, 59.000) ,RADIUS 42.674
the minimum factor of safety is 1.646

At point (295.000, 59.000) under seepage 1,the radius and the corresponding factor of safety are:

56.947	1.983	51.595	1.794	46.242	1.665	40.889	1.659	35.537	1.942
44.458	1.653	42.674	1.646	39.105	1.696	37.321	1.782		

Lowest factor of safety= 1.646 and occurs at radius = 42.674

At point (305.000, 59.000) under seepage 1,the radius and the corresponding factor of safety are:

57.047	1.770	52.307	1.609	47.567	1.512	42.827	1.528	38.087	1.780
50.727	1.567	49.147	1.525	45.987	1.507	44.407	1.511		

Lowest factor of safety= 1.507 and occurs at radius = 45.987

At point (315.000, 59.000) under seepage 1,the radius and the corresponding factor of safety are:

57.147	1.864	53.019	1.706	48.892	1.565	44.764	1.452	40.636	1.637
47.516	1.519	46.140	1.481	43.388	1.461	42.012	1.521		

Lowest factor of safety= 1.452 and occurs at radius = 44.764

At point (325.000, 59.000) under seepage 1,the radius and the corresponding factor of safety are:

57.247	2.216	53.732	2.079	50.217	1.930	46.701	1.793	43.186	1.710
42.014	1.783	40.843	2.514						

Lowest factor of safety= 1.710 and occurs at radius = 43.186

At point (315.000, 69.000) under seepage 1,the radius and the corresponding factor of safety are:

67.147	1.826	62.916	1.656	58.686	1.531	54.456	1.436	50.226	1.663
57.276	1.488	55.866	1.454	53.046	1.456	51.636	1.528		

Lowest factor of safety= 1.436 and occurs at radius = 54.456

At point (315.000, 79.000) under seepage 1,the radius and the corresponding factor of safety are:

77.146	1.827	72.813	1.647	68.481	1.506	64.148	1.430	59.815	1.690
67.036	1.468	65.592	1.440	62.704	1.459	61.259	1.544		

Lowest factor of safety= 1.430 and occurs at radius = 64.148

At point (315.000, 89.000) under seepage 1,the radius and the corresponding factor of safety are:

87.146	1.890	82.710	1.661	78.275	1.510	73.840	1.430	69.404	1.715
76.797	1.466	75.318	1.441	72.361	1.472	70.883	1.567		

Lowest factor of safety= 1.430 and occurs at radius = 73.840

At point (315.000, 99.000) under seepage 1,the radius and the corresponding factor of safety are:

97.145	1.956	92.607	1.724	88.069	1.525	83.532	1.444	78.994	1.746
86.557	1.485	85.044	1.454	82.019	1.489	80.506	1.583		

Lowest factor of safety= 1.444 and occurs at radius = 83.532

At point (325.000, 89.000) under seepage 1,the radius and the corresponding factor of safety are:

87.246	1.980	83.423	1.838	79.600	1.724	75.777	1.617	71.954	1.636
78.326	1.686	77.051	1.652	74.503	1.593	73.229	1.588		

Lowest factor of safety= 1.588 and occurs at radius = 73.229

At point (305.000, 89.000) under seepage 1,the radius and the corresponding factor of safety are:

87.046	1.980	81.998	1.725	76.950	1.542	71.902	1.532	66.855	1.824
75.268	1.512	73.585	1.509	70.220	1.572	68.537	1.658		

Lowest factor of safety= 1.509 and occurs at radius = 73.585

At point (317.500, 89.000) under seepage 1,the radius and the corresponding factor of safety are:

87.171	1.888	82.888	1.680	78.606	1.534	74.324	1.447	70.042	1.693
77.179	1.499	75.752	1.463	72.897	1.458	71.469	1.546		

Lowest factor of safety= 1.447 and occurs at radius = 74.324

At point (312.500, 89.000) under seepage 1,the radius and the corresponding factor of safety are:

87.121	1.898	82.532	1.667	77.944	1.489	73.355	1.437	68.767	1.741
76.414	1.456	74.885	1.431	71.826	1.491	70.297	1.585		

Lowest factor of safety= 1.431 and occurs at radius = 74.885

At point (315.000, 91.500) under seepage 1,the radius and the corresponding factor of safety are:

89.646	1.906	85.185	1.677	80.724	1.514	76.263	1.432	71.802	1.723
79.237	1.469	77.750	1.442	74.776	1.476	73.289	1.571		

Lowest factor of safety= 1.432 and occurs at radius = 76.263

At point (315.000, 86.500) under seepage 1,the radius and the corresponding factor of safety are:

84.646	1.874	80.236	1.653	75.826	1.505	71.417	1.429	67.007	1.708
74.357	1.464	72.887	1.438	69.947	1.468	68.477	1.561		

Lowest factor of safety= 1.429 and occurs at radius = 71.417

At point (315.000, 84.000) under seepage 1,the radius and the corresponding factor of safety are:

82.146	1.858	77.762	1.643	73.378	1.503	68.994	1.430	64.610	1.702
71.917	1.466	70.455	1.437	67.533	1.465	66.071	1.555		

Lowest factor of safety= 1.430 and occurs at radius = 68.994

JIME WALTER RESOURCES, INC.
NO. 4 MINE, P-3260, R-40

At point (317.500, 86.500) under seepage 1,the radius and the corresponding factor of safety are:

84.671	1.873	80.414	1.680	76.158	1.534	71.901	1.447	67.645	1.686
74.739	1.501	73.320	1.464	70.482	1.456	69.063	1.540		

Lowest factor of safety= 1.447 and occurs at radius = 71.901

At point (312.500, 86.500) under seepage 1,the radius and the corresponding factor of safety are:

84.621	1.881	80.058	1.651	75.495	1.487	70.932	1.434	66.370	1.734
73.974	1.450	72.453	1.429	69.412	1.488	67.891	1.582		

Lowest factor of safety= 1.429 and occurs at radius = 72.453

For piezometric line No. 1

At point (315.000, 86.500) ,RADIUS 71.417
the minimum factor of safety is 1.429

Cross section in distorted scale. Numerals indicate boundary line no. If there area more than 10 bound. lines, alphabets will then be used. P indicates Piezometric line. If a portion of Piezometric line coincides with the ground or another boundary line, only the ground or boundary line will be shown. X indicates intersection of two boundary lines. * indicates failure surface.

The minimum factor of safety is 1.429

JIME WALTER RESOURCES, INC.
NO. 4 MINE, P-3260, R-40

```
4.000E+01 X+++++++++X+++++++++X+++++++++X+++++++++X+++++++++X
      +  +                        +
      +  +         4              +
      +  +                        +
      +  +         *              +
3.600E+01 X  X  +     +     +     +     X
      +  4444444444444444X                +
      +  +                        +
      +  +         4              +
      +  +                        +
3.200E+01 X  X  +     +     +     +     X
      +  +                        +
      +  +         P              +
      +  +                        +
      +  +        3               +
2.800E+01 X  X  +     + 4   +     +     X
      +  +                        +
      +  +         P              +
      +  +                        +
      +  +                        +
2.400E+01 X  X  +     + *   +     +     X
      +  +        3               +
      +  +          4             +
      +  +                        +
      +  +                        +
2.000E+01 X  X3333+     +     +     +     X
      +  +  3333                  +
      +  +    3333                +
      +  +       X222222            +
      +  +          X44444          +
1.600E+01 X  X  +     +     +44444  +     X
      +  +          *     4       +
      +  +                        +
      +  +                        +
      +  +                        +
1.200E+01 X  X  +     +     +     +     X
      +  +                        +
      +  +                        +
      +  +                        +
      +  +                        +
8.000E+00 X  X  +     +     +     +     X
      +  +                        +
      +  +                        +
      +  +                        +
      +  111111                   +
4.000E+00 X  X  +11111  +     +     +     X
      +  +      11111             +
      +  +        11111           +
      +  +          11111         +
      +  +             11111      +
.000E+00 X+++++++++X+++++++++X+++++++++X+++++1+++X+++++++++X
0      -8.00E+01  8.00E+01  2.40E+02  4.00E+02  5.60E+02  7.20E+02
```