SHANNON, LLC

ATTACHMENT III-B-5(b)

SHANNON MINE

P-3859

JEFFERSON COUNTY, ALABAMA

BY

DRUMMOND COMPANY, INC.
POST OFFICE BOX 1549
JASPER, ALABAMA 35502

NOVEMBER 1, 2011

Post Office Box 1549
Jasper, Alabama 35502-1549

Telephone: (205) 387-0501
Facsimile: (205) 384-2456

DRUMMOND COMPANY, INC.

November 1, 2011

Mr. Michael Harrison, P.E.
Alabama Surface Mining Commission
Post Office Box 2390
Jasper, Alabama 35502-2390

RE: Shannon, LLC
Shannon Mine
P- 3859

Dear Michael:

I hereby certify the attached detailed design plans for Primary Road 7P for the above referenced mine are in accordance with current prudent engineering practices and the Regulations of the Alabama Surface Mining Commission and are true and correct to the best of my knowledge and belief.

If you have any questions or required additional information, please feel free to call.

Sincerely,
PERC Engineering Co., Inc.

Steven R. Ingle, P.E.
Alabama Registration No. 18213

ALABAMA REGISTERED NO. 18213 PROFESSIONAL ENGINEER STEVEN R. INGLE

Applicant: Shannon, LLC
Mine Name: Shannon Mine
Permit Number: P- 3859, Revision R-17

SPECIFICATIONS FOR THE CONSTRUCTION, MAINTENANCE AND RECLAMATION OF PRIMARY ROADS

1. Primary roads shall be designed by or under the direction of a registered professional engineer in accordance with the Alabama Surface Mining Commission rules and regulations and prudent engineering practice.

2. Each roadway embankment will be designed and constructed so as to have a minimum static safety factor of 1.3.

3. To the extent possible, roads will be located on ridges or on the most stable available slopes to prevent or minimize erosion, downstream sedimentation and flooding in an effort to prevent adverse effects to fish, wildlife and related environmental values.

4. To the extent possible, roads will be located above the sediment basins to be constructed for the mining operation in an effort to control or prevent additional contributions of suspended solids to stream flow or runoff outside the permit area and to comply with State and Federal water quality standards applicable to receiving waters and avoid the alteration of the normal flow of water in streambeds or drainage channels while preventing or controlling damage to public or private property. Where it is not possible or is impractical to locate roads in this manner, sediment control devices such as silt fencing, hay bale check dams and rock filter check dams will be used as necessary to maintain water quality. No fording of intermittent or perennial streams will be conducted unless specifically approved by the Alabama Surface Mining Commission as temporary routes to be used during road construction.

5. Prior to construction, the roadway will be cleared, grubbed and will have the topsoil removed. The clearing limits will be kept to the minimum necessary to accommodate the roadbed and associated ditch construction.

6. Roads will be constructed of suitable compacted subgrade material. The material will be free of sod, roots, stones over 12 inches in diameter, and other objectionable materials. The material will be placed and spread over the entire fill area, starting at the lowest point in layers not to exceed 12 inches in thickness. The material will be compacted to 95 percent of the density, based on standard proctor as outlined in ASTM.

7) Primary roads will have a minimum width of eighteen feet and a maximum width necessary to accommodate the largest equipment traveling the road.

8) Roadbeds will be cut to consolidated non-erodible material or will be surfaced with durable non-toxic, non-acid forming substances. The wearing surface will consist of durable sandstone, chert, crushed limestone, crushed concrete, crushed asphalt, red rock, ironore refuse, gravel, or other durable non-toxic, non-acid forming material approved by the Regulatory Authority. The wearing surface will be placed on the roadbed to a depth of four inches.

9. No sustained grades will exceed ten percent unless deemed necessary, in which case appropriate sediment control facilities will be constructed. If grades in excess of fifteen percent are required, cross drains, ditch relief drains and road drainways will be located at a minimum distance of three-hundred feet.

10. Roads will be constructed so as to have adequate drainage utilizing ditches, culverts, cross drains and ditch relief drains designed to safely pass the peak runoff from a ten year, six hour precipitation event. Drainage pipes and culverts shall be installed as designed and will be maintained in a free and operating condition to prevent and control erosion at inlets and outlets. Culverts have been designed to support the load of the heaviest equipment to travel the road and are based on the Handbook of Steel Drainage and Highway Construction Products by the American Iron and Steel Institute and the equipment specifications. Drainage ditches will be constructed and maintained in accordance with the approved design to prevent uncontrolled drainage over the road surface and embankment. Roads will not be located in the channel of an intermittent or perennial stream unless specifically approved by the Alabama Surface Mining Commission. Additionally, no relocation and/or alteration of an intermittent or perennial stream will be done unless specifically approved by the Alabama Surface Mining Commission. In the event that it becomes evident that any drainage structures including culverts, bridges and/or low water crossings will be required in order to cross an intermittent or perennial stream, the structure will be designed and constructed in accordance with Alabama Surface Mining Commission requirements and prudent engineering practice and the approval of the design(s) will be acquired prior to the commencement of construction. Hay bale check dams and silt fences will be used at strategic locations when necessary to control sediment runoff. Immediately upon completion of construction, the side slopes of the road embankments and/or cuts will be fertilized, seeded with annual and perennial grasses and mulch will be added to aid in the prevention of erosion and to enhance seed germination. The seed mix will consist of, but is not limited to, some combination of the following species: Bermuda grass, fescue, lespedeza, rye grass, brown top millet, clover and vetch. The

particular species to be planted will vary with the planting season at the time of seed application. Upon completion of construction of each phase of the roadway the construction will be certified to the Alabama Surface Mining Commission as having been done in accordance with the approved plans for the roadway and associated facilities.

11. Routine maintenance will be required to assure that the road continually meets performance standards and will consist of periodic grading, resurfacing, dust suppression and maintenance of sediment control facilities. Dust suppression will consist of the application of water, chemical binders and/or other dust suppressants. No oil will be utilized in this process. Spot seeding, fertilizing and mulching will be performed as necessary to improve vegetative cover on roadway slopes. A road damaged by a catastrophic event shall be repaired as soon as practicable after the damage has occurred.

12. Roads not to be retained as part of the post mine land use shall be reclaimed in accordance with the approved reclamation plan for this permit as soon as practicable after they are no longer needed as part of the mining and reclamation operation, using the following procedures:

    a. The road will be closed to traffic.
    b. All bridges, culverts and other drainage structures not approved as part of the post mine land use will be removed.
    c. All road surfacing materials that are not compatible with the post mine land use or revegetation requirements will be properly disposed of on-site or removed from the site for re-use.
    d. Roadway cut and fill slopes shall be regraded and reshaped to be compatible with the post mine land use and to compliment the natural drainage pattern of the surrounding terrain.
    e. The natural drainage patterns shall be protected from surface runoff and erosion utilizing the installation of dikes and/or cross drains as necessary.
    f. The roadbed shall be ripped or scarified as necessary, the topsoil or substitute or approved growing medium shall be replaced and revegetated in accordance with the approved reclamation plan for this permit.

13. The drawings and data contained in the specific design plans illustrate typical roadbed configurations for primary roads as well as site specific design of drainage structures, stability analysis and ditch sections.

TYPICAL HAUL ROAD
CUT SECTION

NO SCALE

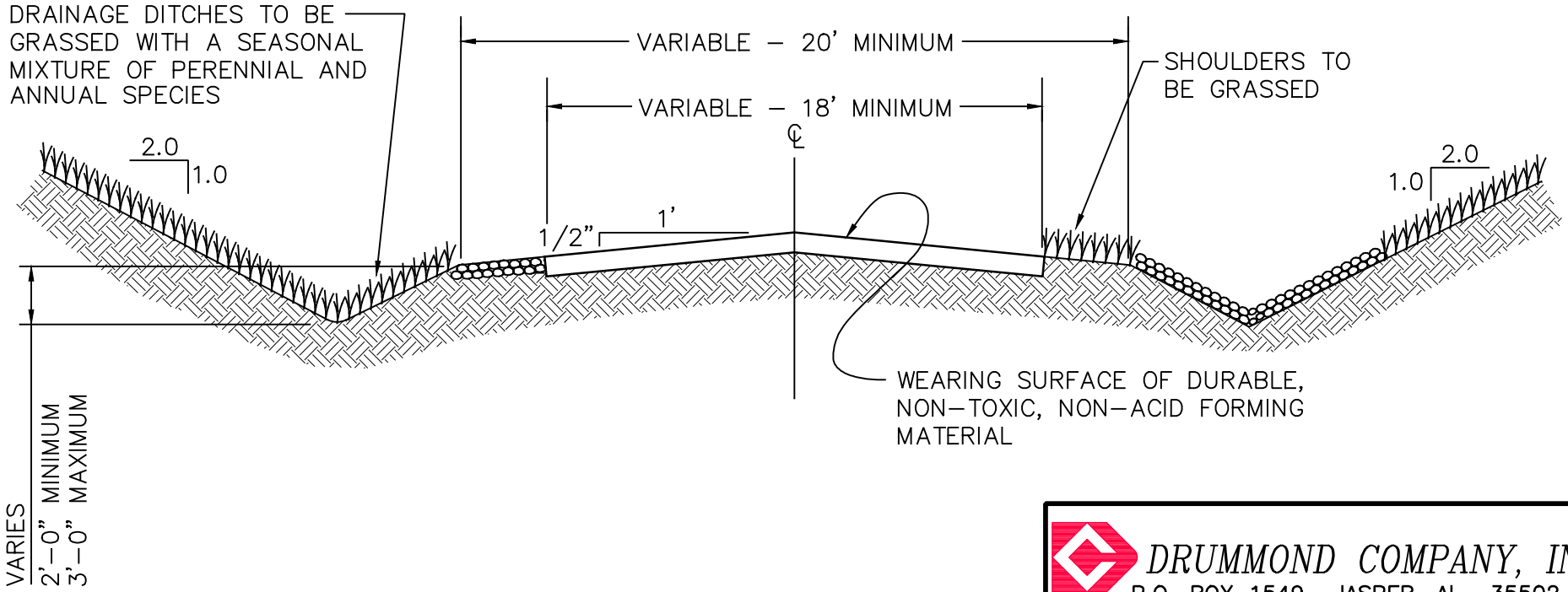

DRUMMOND COMPANY, INC.
P.O. BOX 1549 JASPER, AL 35502

TYPICAL CUT SECTION
PRIMARY HAUL ROAD

DRAWN BY:	P.T.O.	DATE:	2–22–11
DWG. NAME:	PRIMARY ROAD TYPICALS		
APPROVED BY:	–	SCALE:	NONE

ATTACHMENT III.–B.–5.

G:\Todd Odom\PTO\S\Drummond ASMC Typical Dwgs\Primary Road Typicals.dwg 11/17/11 08:51

TYPICAL HAUL ROAD
FILL SECTION

NO SCALE

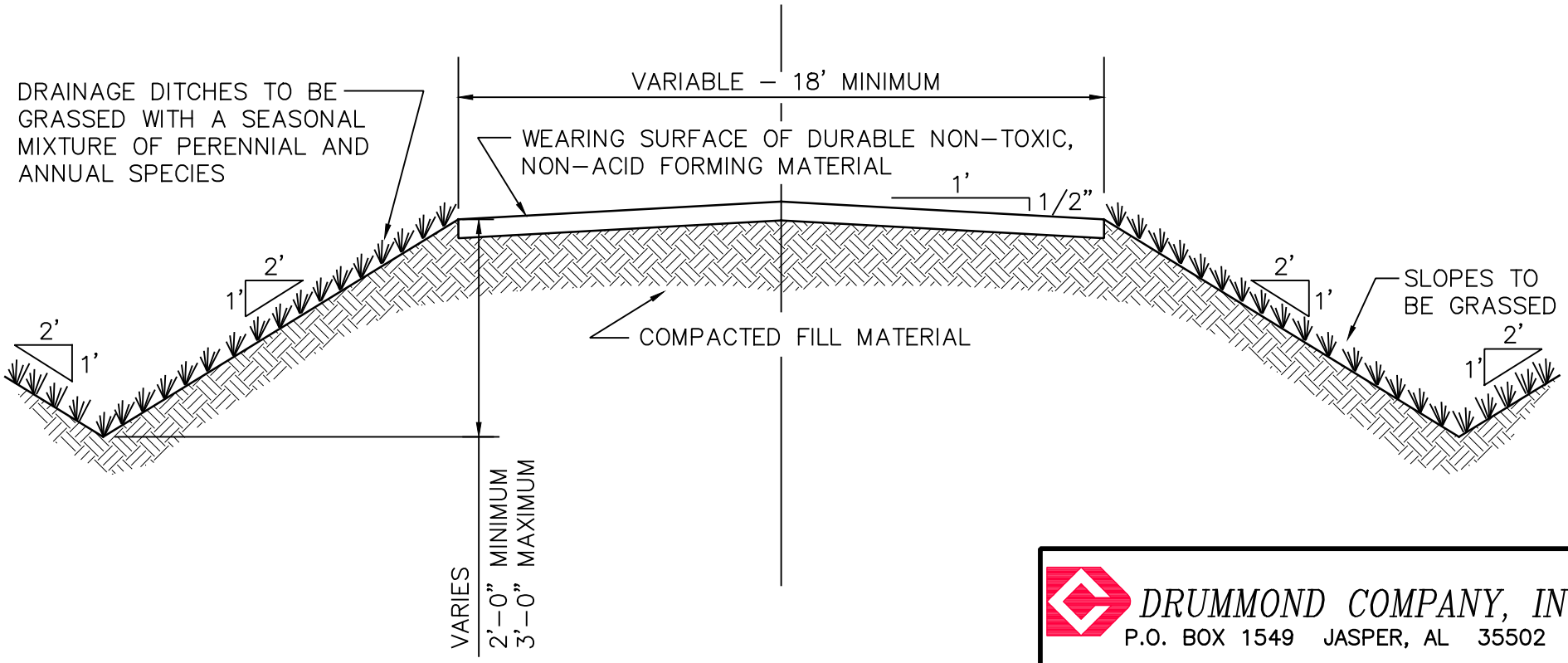

DRUMMOND COMPANY, INC.
P.O. BOX 1549 JASPER, AL 35502

TYPICAL FILL SECTION
PRIMARY HAUL ROAD

DRAWN BY:	P.T.O.	DATE:	2–22–11
DWG. NAME:	PRIMARY ROAD TYPICALS		
APPROVED BY:	–	SCALE:	NONE

ATTACHMENT III.–B.–5.

G:\Todd Odom\PTO\S\Drummond ASMC Typical Dwgs\Primary Road Typicals.dwg 11/17/11 08:51

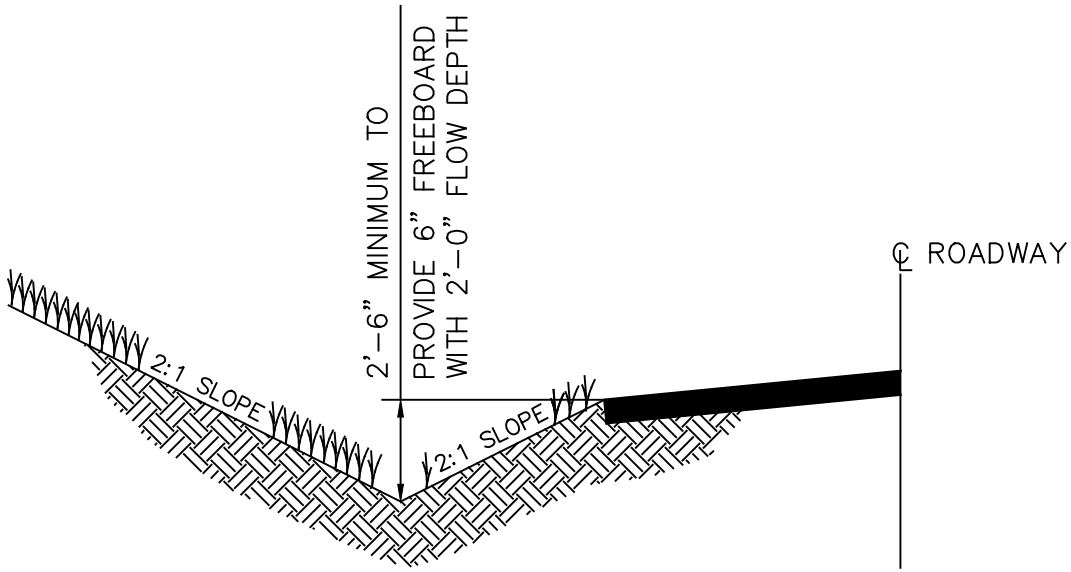

MINIMUM DITCH GRADIENT = 1%

MAXIMUM DITCH GRADIENT = 5%

DITCH CHANNEL TO BE VEGETATED WITH A MIXTURE OF BERMUDA GRASS, FESCUE, AND LESPEDEZA TO CONFORM TO CLASS "D" RETARDANT CLASS.

ATTACHMENT III.–B.–5.

DRUMMOND COMPANY, INC.
P.O. BOX 1549 JASPER, AL 35502

TYPICAL PRIMARY ROADWAY DITCH CROSS SECTION

DRAWN BY:	P.T.O.	DATE:	2–22–11
DWG. NAME:	PRIMARY ROAD TYPICALS		
APPROVED BY:	–	SCALE:	NONE

G:\Todd Odom\PTO\S\Drummond ASMC Typical Dwgs\Primary Road Typicals.dwg 11/17/11 08:51

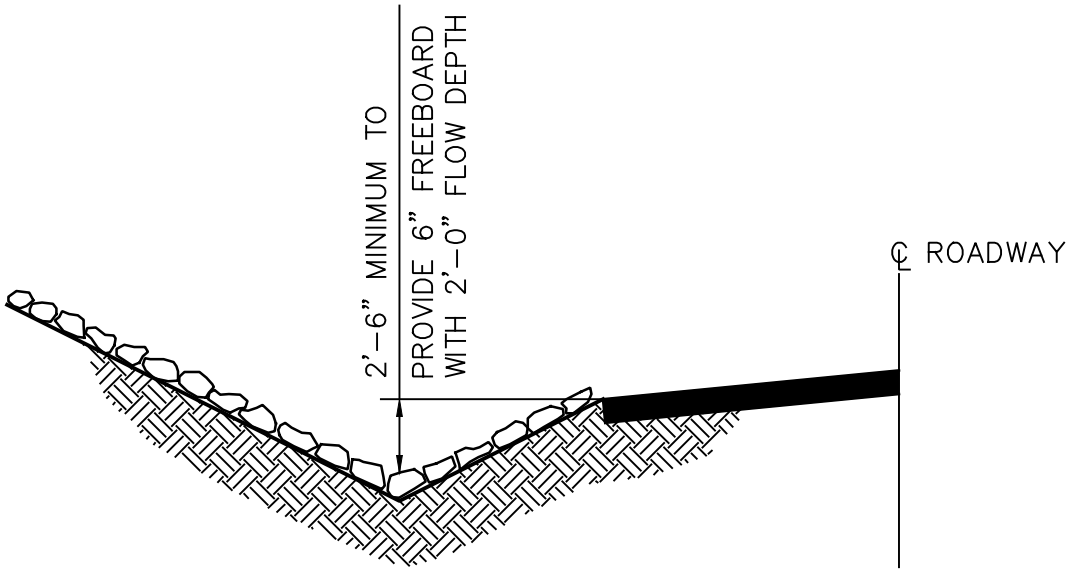

DITCH GRADIENT 5% TO 10%

DITCH CHANNEL TO BE LINED WITH NON-ERODIBLE NON-TOXIC, NON-ACID FORMING SANDSTONE OR LIMESTONE RIP-RAP. THE RIP-RAP WILL BE "CLASS 1" RIP-RAP AND HAVE A MINIMUM THICKNESS OF 12".

ATTACHMENT III.-B.-5.

DRUMMOND COMPANY, INC.
P.O. BOX 1549 JASPER, AL 35502

TYPICAL PRIMARY ROADWAY DITCH CROSS SECTION

DRAWN BY:	P.T.O.	DATE:	2-22-11
DWG. NAME:	PRIMARY ROAD TYPICALS		
APPROVED BY:	-	SCALE:	NONE

G:\Todd Odom\PTO\S\Drummond ASMC Typical Dwgs\Primary Road Typicals.dwg 11/17/11 08:51

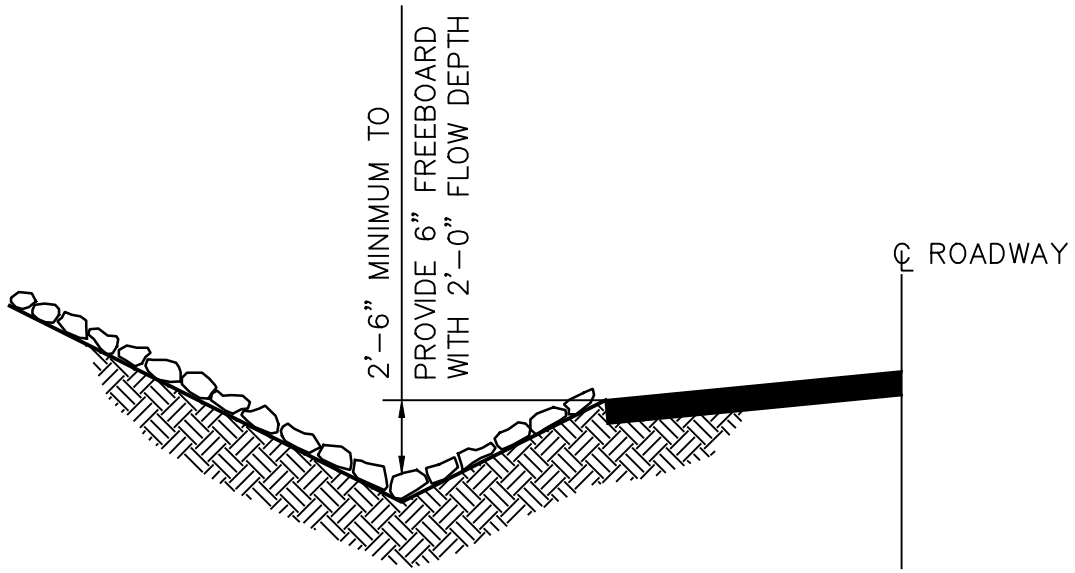

DITCH GRADIENT 11% TO 17%

DITCH CHANNEL TO BE LINED WITH NON-ERODIBLE NON-TOXIC, NON-ACID FORMING SANDSTONE OR LIMESTONE RIP-RAP. THE RIP-RAP WILL BE "CLASS 2" RIP-RAP AND HAVE A MINIMUM THICKNESS OF 16".

ATTACHMENT III.-B.-5.

DRUMMOND COMPANY, INC.
P.O. BOX 1549 JASPER, AL 35502

TYPICAL PRIMARY ROADWAY DITCH CROSS SECTION

DRAWN BY:	P.T.O.	DATE:	2-22-11
DWG. NAME:	PRIMARY ROAD TYPICALS		
APPROVED BY:	-	SCALE:	NONE

G:\Todd Odom\PTO\S\Drummond ASMC Typical Dwgs\Primary Road Typicals.dwg 11/17/11 08:51

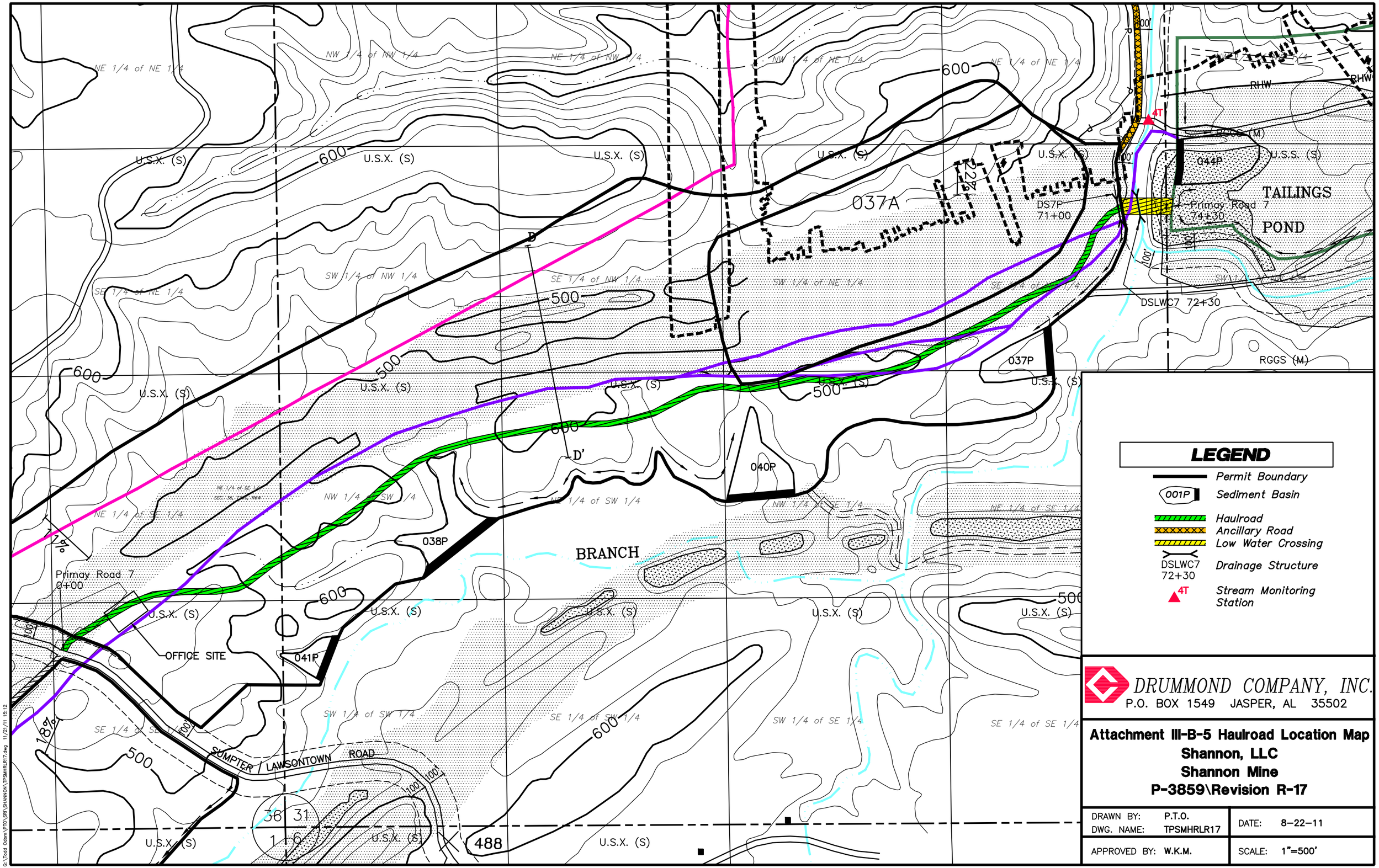

DRUMMOND COMPANY, INC.
P.O. BOX 1549 JASPER, AL 35502

Attachment III-B-5 Haulroad Location Map
Shannon, LLC
Shannon Mine
P-3859\Revision R-17

DRAWN BY:	P.T.O.	DATE:	8-22-11
DWG. NAME:	TPSMHRLR17		
APPROVED BY:	W.K.M.	SCALE:	1"=500'

c:\Todd Odom\PTP\SR\SHANNON\TPSMHRLR17.dwg 11/21/11 15:12

NOTES

1) Drainage Structure DSLWC7 72+30 is a low water crossing across Blue Creek used to transport personnel, equipment, supplies, coal, and as general access between Shannon Mine, P-3859 and Shannon Mine No. 2, P-3925. The low water crossing will only be used during times when the crossing is not inundated by Blue Creek.

2) The flow rate of Blue Creek used in the design of Drainage Structure DSLWC7 72+30, 148.7 cfs, was based on the maximum flow reported from a stream monitoring site, 4T for permits P-3534, P-3630, and P-3925. From the reported flow data for 4T on file at the ASMC it was determined that the maximum flow, 148.7 cfs, was observed on 3/28/96. The drainage area for 4T was calculated to be 6,720 acres.

The $7Q_2$ method of estimating stream flow was also evaluated to determine the base flow at Drainage Structure DSLWC7 72+30.

$7Q_2$ = flow rate cfs = $0.24 \times 10^{-4} (G-30)^{1.07} (A)^{0.94} (P-30)^{1.51}$
G = Stream Flow Resession Index = 65
A = Drainage Area, mi^2 = 10.5
P = Mean Annual Rainfall = 56 inches

$7Q_2$ = flow rate cfs = $0.24 \times 10^{-4} (65-30)^{1.07} (10.5)^{0.94} (56-30)^{1.51}$
$7Q_2$ = flow rate cfs = 1.346 cfs

With the above information in mind, a flow rate of 148.7 cfs was used to size Drainage Structure DSLWC7 72+30. It was determined that 2 - 48 inch diameter reinforced concrete metal pipes will be used to carry the base flow of Blue Creek.

Drainage Structure DSLWC7 72+30 was also designed to carry the peak flow from a 25 year - 6 hour precipitation event, 748.5 cfs. The roadway surface of Drainage Structure DSLWC7 72+30 will be surfaced with 8 inches of concrete reinforced with 2 layers of #5 rebar on 6 inch centers, while the side slopes will be surfaced with 4 inches of concrete reinforced with standard concrete reinforcement wire. With this surfacing in mind, the crossing was treated as a spillway system and will safely convey the peak flow predicted from the design event.

4) In an effort to control siltation from the roadway surface and road ditches of Road 7P, sediment traps consisting of sumps approximately 10' X 10' X 3' will be placed at the corner of the approaches of Drainage Structure DSLWC7 72+30. The sediment traps will be inspected weekly. Maintenance will be performed as necessary to ensure that the sediment traps are functioning properly. When the sumps fill with sediment, the sediment will be removed and transported back to the permit area within drainage control.

5) Any debris, mud, or dust accumulated upon the roadway surface along Drainage Structure DSLWC7 72+30 will be periodically removed and transported back to the permit area within drainage control to prevent it entering Blue Creek during periods of inundation.

6) Roadway safety rails will be placed along the side slopes of the embankment of Drainage Structure DSLWC7 72+30 as per Mine Safety and Health Administration regulations. The safety rails will consist of steel post and cables of sufficient size to retain the vehicles traveling the road and be placed at the a spacing which will not impede flow when the crossing in inundated and placed at a height equal to the height of the axle of the largest vehicle traveling the roadway. The height is anticipated to be approximately 4 feet.

7) Due to the Drainage Structure DSLWC7 72+30 affecting less than 3,300 linear feet of stream channel during the peak flow of the 25 year - 6 hour precipitation event, which is very small as compared to the large total length of the stream channel, and due to there being no floodplains associated with the stream channel along the impacted section, and the fact that there are no structures located along the impacted area or within the entire reach of the stream channel, and the fact that the property along the impacted area is controlled by Shannon, LLC there will be no adverse impacts to the stream channel or adjacent properties either upstream or downstream of the proposed crossing as a result of its construction.

Madison, Keith

From: Madison, Keith
Sent: Wednesday, August 24, 2011 11:48 AM
To: 'Wheelahan, Candice'
Subject: Shanoon Mine - Blue Creek Crossing
Attachments: Shannon Corp Map.pdf

Candice,

Please accept this e-mail as notification of Shannon, LLC's intention to construct a temporary low water crossing on Blue Creek near North Johns, Alabama. The purpose of this crossing is to move mining equipment from one area to another. The crossing is located in the SE ¼ of NE ¼ of Section 31, Township 19 South, Range 5 West, Jefferson County, Alabama, at Latitude 33 Degrees 20 Minutes, 40 Seconds and Longitude 87 Degrees 05 Minutes, 35 Seconds. The crossing will disturb less than 0.1 acres of Blue Creek. Also, there are no wetlands adjacent to Blue Creek at the proposed crossing location. Please see attached map for the location of the crossing.

Please notify me of your decision. Your prompt consideration will be appreciated.

Thanks,

Keith Madison
Twin Pines, LLC
74 Industrial Parkway
Jasper, AL 35501
email: kmadison@twinpinescoal.com
Phone: (205)295-0995
Direct : (205)295-2890
Fax: (205)295-2923

Twin Pines, LLC
74 Industrial Parkway
P.O. Box 621 Jasper, Alabama 35502
(205) 295-0995 Office (205) 295-0799 Fax

SHANNON, LLC
SHANNON MINE
PROPOSED BLUE CREEK CROSSING

LATITUDE 33°-20'-40"
LONGITUDE 87°-05'-35"

DRAWN BY:	P.T.O.	DATE:	8-24-11
DWG. NAME:	TPSMCOPR		
APPROVED BY:	W.K.M.	SCALE:	1"=2000'

P:\PTO\WKM\TPSMCORP.dwg 08/24/11 08:54

Madison, Keith

From: Wheelahan, Candice [Candice.M.Wheelahan@usace.army.mil]
Sent: Wednesday, August 24, 2011 1:02 PM
To: Madison, Keith
Subject: RE: Shannon Mine - Blue Creek Crossing (UNCLASSIFIED)

Classification: UNCLASSIFIED
Caveats: NONE

Keith,

Thank you for the notification. Temporary roads to move mining equipment are exempt under the Clean Water Act Section 404(f), subsection (E). You will not need a permit as long as you meet these conditions:

(E) for the purpose of construction or maintenance or farm roads or forest roads, or temporary roads for moving mining equipment, where such roads are constructed and maintained, in accordance with best management practices, to assure that flow and circulation patterns and chemical and biological characteristics of the navigable waters are not impaired, that the reach of the navigable waters is not reduced, and that any adverse effect on the aquatic environment will be otherwise minimized;

Which Shannon Mine will this belong to? I will put a note in the file.

Thank you!!

Candice

From: Madison, Keith [mailto:KMadison@twinpinescoal.com]
Sent: Wednesday, August 24, 2011 11:48 AM
To: Wheelahan, Candice
Subject: Shanoon Mine - Blue Creek Crossing

Candice,

Please accept this e-mail as notification of Shannon, LLC's intention to construct a temporary low water crossing on Blue Creek near North Johns, Alabama. The purpose of this crossing is to move mining equipment from one area to another. The crossing is located in the SE ¼ of NE ¼ of Section 31, Township 19 South, Range 5 West, Jefferson County, Alabama, at Latitude 33 Degrees 20 Minutes, 40 Seconds and Longitude 87 Degrees 05 Minutes, 35 Seconds. The crossing will disturb less than 0.1 acres of Blue Creek. Also, there are no wetlands adjacent to Blue Creek at the proposed crossing location. Please see attached map for the location of the crossing.

Please notify me of your decision. Your prompt consideration will be appreciated.

Thanks,

Keith Madison
Twin Pines, LLC
74 Industrial Parkway
Jasper, AL 35501
email: kmadison@twinpinescoal.com
Phone: (205)295-0995
Direct : (205)295-2890
Fax: (205)295-2923

TABLE 3.2A
Surface Water Monitoring Analyses
Blue Creek at Black Diamond
Station 4T

Date	Discharge (cfs)	Discharge per area (cfsm)	Specific Conductance (umhos/cm)	pH (s.u.)	Total Iron (mg/l)	Total Manganese (mg/l)	TSS (mg/l)
011580	-	-	-	5.60	1.00	0.10	5.0
021580	-	-	-	5.00	3.00	0.20	35.0
051580	-	-	-	4.50	5.00	-	-
071580	-	-	-	4.50	-	-	35.0
081580	-	-	-	4.50	-	-	40.0
091580	-	-	-	4.50	1.00	-	100
101580	6.7	0.64	-	4.50	3.50	-	14.0
111580	18.1	1.72	-	5.50	2.50	0.20	42.0
121580	8.30	0.791	-	5.50	6.00	0.50	90.0
011581	7.17	0.682	-	5.60	1.00	0.10	5.0
021581	29.7	2.83	-	5.00	3.00	0.20	35.0
031581	10.4	0.986	-	5.50	1.50	0.20	0
041581	13.6	1.29	-	5.80	3.00	0.40	7.0
051581	14.8	1.41	-	4.50	3.00	0.60	20.0
061581	6.7	0.64	-	5.50	4.50	0.70	38.0
071581	6.8	0.65	-	4.50	4.50	0.80	28.0
091581	5.2	0.50	-	4.50	5.00	3.00	35.0
101581	-	-	-	4.50	2.50	1.40	8.0
111581	-	-	-	4.50	10.0	1.30	59.0
121581	-	-	-	4.50	4.50	0.70	500
011582	-	-	-	5.50	2.50	0.20	0
021582	-	-	-	5.50	3.50	0.40	13.0
031582	-	-	-	6.00	3.50	0.40	6.0
041582	-	-	-	5.50	1.50	0.20	8.0
051582	-	-	-	6.50	2.50	0.40	29.0
061582	-	-	-	6.50	0.50	-	4.0
071582	-	-	-	5.00	0.50	0.90	31.0
081582	-	-	-	6.50	1.50	-	0
111582	4.8	0.46	-	5.50	3.50	-	186
121582	100	9.52	-	5.50	1.50	0.20	0
031583	17.8	1.70	-	6.00	3.00	0.10	80.0
061583	16.5	1.58	-	5.50	-	0.10	78.0
010384	5.0	0.45	220	5.70	0.20	0.10	60.0
032684	20.5	1.95	1000	6.30	0.40	0.10	25.0
092884	5.0	0.47	720	7.30	0.40	0.40	-
121584	7.38	0.703	280	5.40	0.40	0.20	-
031585	9.29	0.885	240	-	0.40	0.20	-
062685	7.17	0.682	-	7.50	0.60	1.50	0
092585	6.03	0.574	-	7.00	0.60	-	21.0
122785	8.44	0.804	-	5.90	2.30	1.30	8.0
032686	10.9	1.04	200	6.00	1.25	-	5.0
062586	6.88	0.655	440	4.37	0.35	-	0
121086	125	11.9	77	6.48	0.41	-	77.0
032387	23.8	2.27	150	5.92	0.65	-	15.2
062587	17.9	1.70	230	5.69	1.09	0.60	18.8

Copied From ASMC File P-3630

TABLE 3.2A (continued)
Surface Water Monitoring Analyses
Blue Creek at Black Diamond
Station 4T

Date	Discharge (cfs)	Discharge per area (cfsm)	Specific Conductance (umhos/cm)	pH (s.u.)	Total Iron (mg/l)	Total Manganese (mg/l)	TSS (mg/l)
090987	5.32	0.507	360	7.00	0.06	0.10	1.4
121087	7.73	0.736	440	6.54	0.19	0.49	8.6
030788	15.6	1.49	670	6.80	0.40	0.60	7.0
062488	0.00	0.00					
081988	0.00	0.00					
110788	23.4	1.42	170	5.99	1.08	0.60	19.6
020189	58.0	5.52	120	6.30	0.72	0.40	16.8
052589	10.9	1.04	230	5.63	0.82	0.46	14
081889	8.56	0.815	440	6.22	0.18	1.60	4.6
122989	45.4	4.32	100	6.94	0.84	0.21	6.2

Copied From ASMC File P-3630

W A L K E R S E R V I C E S C O.

MONITORING REPORT

Company: ALABAMA LAND AND MINERAL
Pit/Mine: OSWAYO #6
Permit#: P-3534

Stream I. D.	Date	Flow cfs	pH s.u.	Fe mg/l	Mn mg/l	Spec. Cond.	TSS mg/l	Temp. deg. C
4T	12/30/93	1.47	6.90	.090	.100	344	3.0	8.3

ALL WATER ANALYSIS DONE ACCORDING TO EPA AND ASTM STANDARDS.

3630

R V I C E S C O.

MONITORING REPORT

ALABAMA LAND AND MINERAL
Mine: OSWAYO #9
Permit#: P-3630

Stream I. D.	Date	Flow cfs	pH s.u.	Fe mg/l	Mn mg/l	Spec. Cond.	TSS mg/l	Temp. deg. C
-02461703	3/28/94	61.65	7.37	1.500	.140	79	36.0	15.0
4T	3/29/94	66.02	6.86	.610	.290	103	11.8	15.7

ALL WATER ANALYSIS DONE ACCORDING TO EPA AND ASTM STANDARDS.

Copied From ASMC File P-3630

3534

W A L K E R S E R V I C E S C O.

MONITORING REPORT

Company: ALABAMA LAND AND MINERAL
Pit/Mine: OSWAYO #6
Permit#: P-3534

Stream I. D.	Date	Flow cfs	pH s.u.	Fe mg/l	Mn mg/l	Spec. Cond.	TSS mg/l	Temp. deg. C
4T	6/07/94	.74	6.92	2.760	.710	351	1.0	27.0

ALL WATER ANALYSIS DONE ACCORDING TO EPA AND ASTM STANDARDS.

Copied From ASMC File P-3534

P-3534

W A L K E R S E R V I C E S C O.

MONITORING REPORT

Company: ALABAMA LAND & MINERAL, INC.
Pit/Mine: OSWAYO #6
Permit#: P-3534

Stream I. D.	Date	Flow cfs	pH s.u.	Fe mg/l	Mn mg/l	Spec. Cond.	TSS mg/l	Temp. deg. C
4T	9/29/94	.75	6.60	.096	1.129	341	4.7	22.0

ALL WATER ANALYSIS DONE ACCORDING TO EPA AND ASTM STANDARDS.

Copied From ASMC File P-3534

2021 — 12 3 4 5 6 7 8 9 10 11 12 13 14 15 16 17 18 19 20
RECEIVED
MINING
MISSION

P-3534

W A L K E R S E R V I C E S C O.

MONITORING REPORT

Company: ALABAMA LAND & MINERAL, INC.
Pit/Mine: [illegible] OSWAYO #6
Permit#: P-3534

Stream I. D.	Date	Flow cfs	pH s.u.	Fe mg/l	Mn mg/l	Spec. Cond.	TSS mg/l	Temp. deg. C
4T	12/08/94	21.29	7.51	.800	.330	150	9.9	17.1

ALL WATER ANALYSIS DONE ACCORDING TO EPA AND ASTM STANDARDS.

Copied From ASMC File P-3534

3534

W A L K E R S E R V I C E S C O.

MONITORING REPORT

Company: ALABAMA LAND & MINERAL CORP.
Pit/Mine: [illegible] OSWAYO # 6
Permit#: P-3534

Stream I. D.	Date	Flow cfs	pH s.u.	Fe mg/l	Mn mg/l	Spec. Cond.	TSS mg/l	Temp. deg. C
4T	3/20/95	10.90	7.00	1.040	.540	186	5.0	18.3

ALL WATER ANALYSIS DONE ACCORDING TO EPA AND ASTM STANDARDS.

Copied From ASMC File P-3534

3630

W A L K E R S E R V I C E S C O.

MONITORING REPORT

Company: ALABAMA LAND & MINERAL CORP.
Pit/Mine: OSWAYO #9
Permit#: P-3630

Stream I. D.	Date	Flow cfs	pH s.u.	Fe mg/l	Mn mg/l	Spec. Cond.	TSS mg/l	Temp. deg. C
-2461703	6/13/95	.31	6.83	1.107	.300	226	5.0	23.7
4T	6/15/95	.94	6.68	.126	.698	281	6.0	23.8

ALL WATER ANALYSIS DONE ACCORDING TO EPA AND ASTM STANDARDS.

Copied From ASMC File P-3630

3630

W A L K E R S E R V I C E S C O.

MONITORING REPORT

Company: ALABAMA LAND & MINERAL CORP.
Pit/Mine: OSWAYO #9
Permit#: P-3630

Stream I. D.	Date	Flow cfs	pH s.u.	Fe mg/l	Mn mg/l	Spec. Cond.	TSS mg/l	Temp. deg. C
-2461703	9/14/95	DRY						
4T	9/14/95	DRY						

ALL WATER ANALYSIS DONE ACCORDING TO EPA AND ASTM STANDARDS.

Copied From ASMC File P-3630

P-3630

W A L K E R S E R V I C E S C O.

MONITORING REPORT

Company: ALABAMA LAND & MINERAL CORP.
Pit/Mine: OSWAYO #9
Permit#: P-3630

Stream I. D.	Date	Flow cfs	pH s.u.	Fe mg/l	Mn mg/l	Spec. Cond.	TSS mg/l	Temp. deg. C
-2461703	12/29/95	7.42	8.03	.404	.000	111	2.0	5.4
4T	12/29/95	8.82	7.56	.512	.455	165	8.0	7.9

ALL WATER ANALYSIS DONE ACCORDING TO EPA AND ASTM STANDARDS.

Copied From ASMC File P-3630

RECEIVED MINING

W A L K E R S E R V I C E S C O.

MONITORING REPORT

ıpany: ALABAMA LAND & MINERAL CORP.
ıt/Mine: OSWAYO #9
ermit#: P-3630

Stream I. D.	Date	Flow cfs	pH s.u.	Fe mg/l	Mn mg/l	Spec. Cond.	TSS mg/l	Temp. deg. C
-2461703	3/28/96	53.75	6.86	.594	.069	80	9.0	12.9
4T	3/28/96	148.67	6.78	.721	.126	80	12.0	12.8

ALL WATER ANALYSIS DONE ACCORDING TO EPA AND ASTM STANDARDS.

Copied From ASMC File P-3630

RECEIVED
SURFACE MINING
COMMISSION

P-3630

W A L K E R S E R V I C E S C O.

MONITORING REPORT

Company: ALABAMA LAND & MINERAL CORP.
Pit/Mine: OSWAYO #9
Permit#: P-3630

Stream I. D.	Date	Flow cfs	pH s.u.	Fe mg/l	Mn mg/l	Spec. Cond.	TSS mg/l	Temp. deg. C
-2461703	4/01/96	14.14	7.38	.627	.069	116	5.0	15.8
4T	6/28/96	.12	4.89	.047	.714	381	2.0	27.3

ALL WATER ANALYSIS DONE ACCORDING TO EPA AND ASTM STANDARDS.

Copied From ASMC File P-3630

1996 27 28 29 30 31

P-3632

W A L K E R S E R V I C E S C O.

MONITORING REPORT

Company: ALABAMA LAND & MINERAL CORP.
Pit/Mine: OSWAYO #9
Permit#: P-3630

Stream I. D.	Date	Flow cfs	pH s.u.	Fe mg/l	Mn mg/l	Spec. Cond.	TSS mg/l	Temp. deg. C
-2461703	9/23/96	.24	7.29	.851	.165	257	.0	24.0
4T	9/25/96	.21	6.85	.098	.712	327	5.0	22.8

ALL WATER ANALYSIS DONE ACCORDING TO EPA AND ASTM STANDARDS.

Copied From ASMC File P-3630

P-3630

W A L K E R S E R V I C E S C O.

MONITORING REPORT

Company: ALABAMA LAND & MINERAL CORP.
Pit/Mine: OSWAYO #9
Permit#: P-3630

Stream I. D.	Date	Flow cfs	pH s.u.	Fe mg/l	Mn mg/l	Spec. Conc.	TSS mg/l	Temp. deg. C
-2461703	12/14/95	1.15	7.27	.703	.097	137	13.0	11.1
4T	12/30/95	4.02	7.85	.762	.311	122	12.0	16.1

ALL WATER ANALYSIS DONE ACCORDING TO EPA AND ASTM STANDARDS.

Copied From ASMC File P-3630

JAN 1996
RECEIVED
SURFACE MINING
COMMISSION

P-3630

W A L K E R S E R V I C E S C O.

MONITORING REPORT

Company: ALABAMA LAND & MINERAL CORP.
Pit/Mine: OSWAYO #9
Permit#: P-3630

Stream I. D.	Date	Flow cfs	pH s.u.	Fe mg/l	Mn mg/l	Spec. Cond.	TSS mg/l	Temp. deg. C
-2461700	3/21/97	.84	7.52	.834	.155	216	1.0	20.2
-2461703	3/21/97	.48	7.36	.676	.125	245	6.0	15.6
4T	3/21/97	.44	7.82	.382	.425	167	7.0	20.9

ALL WATER ANALYSIS DONE ACCORDING TO EPA AND ASTM STANDARDS.

Copied From ASMC File P-3630

APR 1997
RECEIVED
SURFACE MINING
COMMISSION

P-3630

W A L K E R S E R V I C E S C O.

MONITORING REPORT

Company: ALABAMA LAND & MINERAL CORP.
Pit/Mine: OSWAYO #9
Permit#: P-3630

Stream I. D.	Date	Flow cfs	pH s.u.	Fe mg/l	Mn mg/l	Spec. Cond.	TSS mg/l	Temp. deg. C
-2461700	4/01/97	2.57	7.93	.464	.145	45.	8.0	18.5
-2461703	4/01/97	3.72	7.75	.200	.092	735	25.0	17.5
9T	6/16/97	.27	6.56	.982	.166	75	9.0	22.0
4T	8/15/97	1.15	7.52	.260	.699	250	11.0	19.5

ALL WATER ANALYSIS DONE ACCORDING TO EPA AND ASTM STANDARDS.

Copied From ASMC File P-3630

P-3630

W A L K E R S E R V I C E S C O.

MONITORING REPORT

Company: ALABAMA LAND & MINERAL CORP.
Pit/Mine: OSWAYO #9
Permit#: P-3630

Stream I. D.	Date	Flow cfs	pH s.u.	Fe mg/l	Mn mg/l	Spec. Cond.	TSS mg/l	Temp. deg. C
-2461700	8/07/97	1.26	7.27	.984	.206	221	7.0	25.6
-2461703	8/07/97	.44	7.37	.891	.160	190	2.0	24.6
3T	8/18/97	DRY						
4T	8/07/97	1.84	6.89	.173	.911	307	7.0	27.2

ALL WATER ANALYSIS DONE ACCORDING TO EPA AND ASTM STANDARDS.

Copied From ASMC File P-3630

W A L K E R S E R V I C E S C O.

P-3630

MONITORING REPORT

Company: ALABAMA LAND & MINERAL CORP.
Pit/Mine: OSWAYO #9
Permit#: P-3630

Stream I. D.	Date	Flow cfs	pH s.u.	Fe mg/l	Mn mg/l	Spec. Cond.	TSS mg/l	Temp. deg. C
-2461700	11/05/97	2.41	8.14	.658	.143	427	5.0	15.8
-2461703	12/13/97	3.20	7.68	.648	.046	170	10.0	8.3
3T	10/24/97	.02	7.80	.272	1.306	368	5.0	20.4
4T	11/05/97	.70	7.46	.397	1.316	352	13.0	15.1

ALL WATER ANALYSIS DONE ACCORDING TO EPA AND ASTM STANDARDS.

Copied From ASMC File P-3630

W A L K E R S E R V I C E S C O.

MONITORING REPORT

Company: ALABAMA LAND & MINERAL CORP.
Pit/Mine: OSWAYO #9
Permit#: P-3630

Stream I. D.	Date	Flow cfs	pH s.u.	Fe mg/l	Mn mg/l	Spec. Cond.	TSS mg/l	Temp. deg. C
-2461700	2/23/98	16.45	8.22	1.155	.109	233	9.0	11.1
-2461703	2/23/98	17.30	8.22	1.574	.098	233	9.0	11.1
3T	2/11/98	.32	7.10	.195	.019	247	4.0	15.0
4T	2/16/96	19.08	7.08	.647	.461	182	11.0	13.0

ALL WATER ANALYSIS DONE ACCORDING TO EPA AND ASTM STANDARDS.

Copied From ASMC File P-3630

P-3630

W A L K E R S E R V I C E S C O.

MONITORING REPORT

Company: ALABAMA LAND & MINERAL CORP.
Pit/Mine: OSWAYO #9
Permit#: P-3630

Stream I. D.	Date	Flow cfs	pH s.u.	Fe mg/l	Mn mg/l	Spec. Cond.	TSS mg/l	Temp. deg. C
-2461700	4/22/98	10.21	7.28	1.077	.124	89	17.0	15.7
-2461703	4/24/98	3.75	7.30	1.001	.084	93	23.0	15.5
3T	4/22/98	.08	7.10	1.015	.119	53	10.0	15.4
4T	4/24/98	.82	6.92	.892	.461	165	9.0	16.9

ALL WATER ANALYSIS DONE ACCORDING TO EPA AND ASTM STANDARDS.

Copied From ASMC File P-3630

JUL 1998
RECEIVED
SURFACE MINING
COMMISSION

P-3630

W A L K E R S E R V I C E S C O.

MONITORING REPORT

Company: ALABAMA LAND & MINERAL CORP.
Pit/Mine: OSWAYO #9
Permit#: P-3630

Stream I. D.	Date	Flow cfs	pH s.u.	Fe mg/l	Mn mg/l	Spec. Cond.	TSS mg/l	Temp. deg. C
-2461700	7/23/98	DRY						
-2461703	7/25/98	DRY						
3T	7/23/98	DRY						
4T	7/25/98	DRY						

ALL WATER ANALYSIS DONE ACCORDING TO EPA AND ASTM STANDARDS.

Copied From ASMC File P-3630

P-3630

W A L K E R S E R V I C E S C O.

MONITORING REPORT

Company: ALABAMA LAND & MINERAL CORP.
Pit/Mine: OSWAYO #9
Permit#: P-3630

Stream I. D.	Date	Flow cfs	pH s.u.	Fe mg/l	Mn mg/l	Spec. Cond.	TSS mg/l	Temp. deg. C
-2461700	10/06/98	.22	6.80	.489	.427	380	8.0	23.0
-2461703	10/06/98	1.67	6.72	.545	.512	362	4.0	23.1
3T	10/06/98	DRY						
4T	10/26/98	DRY						

ALL WATER ANALYSIS DONE ACCORDING TO EPA AND ASTM STANDARDS.

Copied From ASMC File P-3630

P-3630

W A L K E R S E R V I C E S C O.

MONITORING REPORT

Company: ALABAMA LAND & MINERAL CORP.
Pit/Mine: OSWAYO #9
Permit#: P-3630

Stream I. D.	Date	Flow cfs	pH s.u.	Fe mg/l	Mn mg/l	Spec. Cond.	TSS mg/l	Temp. deg. C
-2461700	2/13/99	5.54	7.93	.658	.010	94	13.0	9.3
-2461703	2/13/99	5.65	7.95	.563	.050	91	4.0	8.8
3T	1/22/99	.08	5.83	.476	.827	343	17.0	14.4
4T	1/22/99	3.34	6.70	.390	.757	299	16.0	14.8

ALL WATER ANALYSIS DONE ACCORDING TO EPA AND ASTM STANDARDS.

Copied From ASMC File P-3630

P-3630

W A L K E R S E R V I C E S C O.

MONITORING REPORT

Company: ALABAMA LAND & MINERAL CORP.
Pit/Mine: OSWAYO #9
Permit#: P-3630

Stream I. D.	Date	Flow cfs	pH s.u.	Fe mg/l	Mn mg/l	Spec. Cond.	TSS mg/l	Temp. deg. C
-2461700	5/11/99	2.30	7.51	.892	.108	101	7.0	24.5
-2461703	6/15/99	1.71	6.88	.736	.172	165	2.0	23.0
3T	5/11/99	1.32	6.97	.310	.673	319	5.0	22.8
4T	5/11/99	.83	7.09	.497	.725	205	7.0	23.6

ALL WATER ANALYSIS DONE ACCORDING TO EPA AND ASTM STANDARDS.

Copied From ASMC File P-3630

P-3630

W A L K E R S E R V I C E S C O.

MONITORING REPORT

Company: ALABAMA LAND & MINERAL CORP.
Pit/Mine: OSWAYO #9
Permit#: P-3630

Stream I. D.	Date	Flow cfs	pH s.u.	Fe mg/l	Mn mg/l	Spec. Cond.	TSS mg/l	Temp. deg. C
-2461700	7/12/99	3.10	6.58	.951	.198	127	11.0	25.7
-2461703	7/16/99	1.40	6.86	.976	.125	165	5.0	24.1
3T	7/12/99	.23	6.64	.991	3.167	398	3.0	23.7
4T	7/12/99	.81	6.71	.467	.795	415	4.0	23.9

ALL WATER ANALYSIS DONE ACCORDING TO EPA AND ASTM STANDARDS.

Copied From ASMC File P-3630

P-3630

W A L K E R S E R V I C E S C O.

MONITORING REPORT

Company: ALABAMA LAND & MINERAL CORP.
Pit/Mine: OSWAYO #9
Permit#: P-3630

Stream I. D.	Date	Flow cfs	pH s.u.	Fe mg/l	Mn mg/l	Spec. Cond.	TSS mg/l	Temp. deg. C
-2461700	10/06/99	.20	7.43	1.461	.178	175	6.0	21.0
-2461703	12/03/99	3.47	7.77	.872	.127	159	5.0	11.2
3T	10/06/99	DRY						
4T	10/06/99	.09	6.96	.126	1.155	488	4.0	17.9

ALL WATER ANALYSIS DONE ACCORDING TO EPA AND ASTM STANDARDS.

Copied From ASMC File P-3630

PERC ENGINEERING CO., INC.
P.O. Box 1712
Jasper, Alabama 35502
(205) 384-5553

Sample Number : 119014
Client : Twin Pines Coal Company, Inc.
Facility : Shannon Mine No. 2
Job Number :
NPDES Permit # :
Basin,Stream,Well ID: 4T
Code : s
Date Taken : 01/22/2009
Sampled By : dcm
Time Taken : 1225
Depth or Flow : 11.55cfs
Tests to be done : pH, Fe, Mn, SO4, Cond, Acid, Alk, Report, TSS,

Parameter	Result	Units	Analyst	Date	Time	Method
Acidity	8	mg/l	Heath Brown	01/26/2009	0830	305.1 (1)
Alkalinity	220	mg/l	Heath Brown	01/26/2009	1045	310.1 (1)
Conductivity	1041	umhos	Heath Brown	01/23/2009	1450	120.1 (1)
Iron	0.64	mg/l	Ryan H. Clement	02/03/2009	1035	236.1 (1)
Manganese	0.80	mg/l	Ryan H. Clement	02/03/2009	1135	243.1 (1)
pH	8.36	s.u.	Danny C. Mays	01/22/2009	1225	150.1 (1)
Report			Sherri Fields	02/03/2009		
Sulfate	390	mg/l	Heath Brown	01/23/2009	1545	8051 (3)
TSS	13	mg/l	Heath Brown	01/23/2009	1045	160.2 (1)

1) EPA-600/4-79-020 Revised March 1983

2) Standard Methods for the Examination Water and Wastes Water

3) HACH Water Analysis Handbook, 2nd Edition

4) EPA-600/4-88/039 Revised July 1991

5) EPA, Test Methods for Evaluating Solid Waste, SW-846, 3rd Edition

6) Code of Federal Regulations, Title 40, Part 136, Appendix A

APPROVED BY: Mark Williams

PERC ENGINEERING CO., INC.
P.O. Box 1712
Jasper, Alabama 35502
(205) 384-5553

Sample Number : 119756
Client : Twin Pines Coal Company, Inc.
Facility : Shannon Mine No. 2
Job Number :
NPDES Permit # :
Basin,Stream,Well ID: 4T
Code : s
Date Taken : 02/19/2009
Sampled By : dcm
Time Taken : 1100
Depth or Flow : 11.53cfs
Tests to be done : pH, Fe, Mn, SO4, Acid, Alk, Cond, Report, TSS,

Parameter	Result	Units	Analyst	Date	Time	Method
Acidity	6	mg/l	Heath Brown	02/20/2009	0800	305.1 (1)
Alkalinity	226	mg/l	Heath Brown	02/20/2009	0945	310.1 (1)
Conductivity	1134	umhos	Heath Brown	02/23/2009	0900	120.1 (1)
Iron	0.88	mg/l	Ryan H. Clement	02/20/2009	1904	236.1 (1)
Manganese	0.36	mg/l	Ryan H. Clement	02/20/2009	2013	243.1 (1)
pH	7.47	s.u.	Danny C. Mays	02/19/2009	1100	150.1 (1)
Report			Sherri Fields	02/23/2009		
Sulfate	430	mg/l	Heath Brown	02/20/2009	1400	8051 (3)
TSS	3	mg/l	Heath Brown	02/20/2009	1440	160.2 (1)

1) EPA-600/4-79-020 Revised March 1983

2) Standard Methods for the Examination Water and Wastes Water

3) HACH Water Analysis Handbook, 2nd Edition

4) EPA-600/4-88/039 Revised July 1991

5) EPA, Test Methods for Evaluating Solid Waste, SW-846, 3rd Edition

6) Code of Federal Regulations, Title 40, Part 136, Appendix A

APPROVED BY: Mark Williams

PERC ENGINEERING CO., INC.
P.O. Box 1712
Jasper, Alabama 35502
(205) 384-5553

Sample Number : 120637
Client : Twin Pines Coal Company, Inc.
Facility : Shannon Mine No. 2
Job Number :
NPDES Permit # :
Basin,Stream,Well ID: 4T
Code : s
Date Taken : 03/24/2009
Sampled By : dcm
Time Taken : 1100
Depth or Flow : 8.728cfs
Tests to be done : pH, Fe, Mn, Cond, SO4, Acid, Alk, Report, TSS,

Parameter	Result	Units	Analyst	Date	Time	Method
Acidity	6	mg/l	Heath Brown	03/27/2009	0745	305.1 (1)
Alkalinity	230	mg/l	Heath Brown	03/27/2009	0955	310.1 (1)
Conductivity	204	umhos	Danny C. Mays	03/24/2009	1100	120.1 (1)
Iron	0.82	mg/l	Ryan H. Clement	03/30/2009	1225	236.1 (1)
Manganese	0.48	mg/l	Ryan H. Clement	03/30/2009	1336	243.1 (1)
pH	6.70	s.u.	Danny C. Mays	03/24/2009	1100	150.1 (1)
Report			Sherri Fields	03/30/2009		
Sulfate	72	mg/l	Heath Brown	03/25/2009	0745	8051 (3)
TSS	12	mg/l	Heath Brown	03/25/2009	1650	160.2 (1)

1) EPA-600/4-79-020 Revised March 1983

2) Standard Methods for the Examination Water and Wastes Water

3) HACH Water Analysis Handbook, 2nd Edition

4) EPA-600/4-88/039 Revised July 1991

5) EPA, Test Methods for Evaluating Solid Waste, SW-846, 3rd Edition

6) Code of Federal Regulations, Title 40, Part 136, Appendix A

APPROVED BY: Mark Williams

PERC ENGINEERING CO., INC.
P.O. Box 1712
Jasper, Alabama 35502
(205) 384-5553

Sample Number : 122652
Client : Twin Pines Coal Company, Inc.
Facility : Shannon Mine No. 2 P-3925
Job Number :
NPDES Permit # :
Basin,Stream,Well ID: 4T
Code : s
Date Taken : 06/04/2009
Sampled By : swr
Time Taken : 1350
Depth or Flow : 4.139cfs
Tests to be done : pH, Fe, Mn, Cond, TSS, Report,

Parameter	Result	Units	Analyst	Date	Time	Method
Conductivity	247	umhos	Heath Brown	06/09/2009	0800	120.1 (1)
Iron	0.80	mg/l	Mark Williams	06/12/2009	1505	236.1 (1)
Manganese	0.44	mg/l	Allen Bailey	06/12/2009	1605	243.1 (1)
pH	7.34	s.u.	Steve Riddlesperger	06/04/2009	1350	150.1 (1)
Report			Sherri Fields	06/15/2009		
TSS	6	mg/l	Heath Brown	06/08/2009	1415	160.2 (1)

1) EPA-600/4-79-020 Revised March 1983

2) Standard Methods for the Examination Water and Wastes Water

3) HACH Water Analysis Handbook, 2nd Edition

4) EPA-600/4-88/039 Revised July 1991

5) EPA, Test Methods for Evaluating Solid Waste, SW-846, 3rd Edition

6) Code of Federal Regulations, Title 40, Part 136, Appendix A

APPROVED BY: Mark Williams

PERC ENGINEERING CO., INC.
P.O. Box 1712
Jasper, Alabama 35502
(205) 384-5553

Sample Number : 125213
Client : Twin Pines Coal Company, Inc.
Facility : Shannon Mine No. 2 P-3925
Job Number :
NPDES Permit # :
Basin,Stream,Well ID: 4T
Code : s
Date Taken : 09/15/2009
Sampled By : swr
Time Taken : 0932
Depth or Flow : 1.355cfs
Tests to be done : pH, Fe, Mn, Cond, TSS, Report,

Parameter	Result	Units	Analyst	Date	Time	Method
Conductivity	321	umhos	Heath Brown	09/21/2009	1025	120.1 (1)
Iron	0.71	mg/l	Allen Bailey	09/22/2009	0805	236.1 (1)
Manganese	1.01	mg/l	Allen Bailey	09/22/2009	0910	243.1 (1)
pH	9.81	s.u.	Steve Riddlesperger	09/15/2009	0932	150.1 (1)
Report			Sherri Fields	09/22/2009		
TSS	11	mg/l	Heath Brown	09/16/2009	0950	160.2 (1)

1) EPA-600/4-79-020 Revised March 1983

2) Standard Methods for the Examination Water and Wastes Water

3) HACH Water Analysis Handbook, 2nd Edition

4) EPA-600/4-88/039 Revised July 1991

5) EPA, Test Methods for Evaluating Solid Waste, SW-846, 3rd Edition

6) Code of Federal Regulations, Title 40, Part 136, Appendix A

APPROVED BY: Mark Williams

PERC ENGINEERING CO., INC.
P.O. Box 1712
Jasper, Alabama 35502
(205) 384-5553

Sample Number : 126643
Client : Twin Pines Coal Company, Inc.
Facility : Shannon Mine No. 2 P-3925
Job Number :
NPDES Permit # :
Basin,Stream,Well ID: 4T
Code : s
Date Taken : 10/29/2009
Sampled By : swr
Time Taken : 1355
Depth or Flow : 4.586cfs
Tests to be done : pH, Cond, Fe, Mn, TSS, Report,

Parameter	Result	Units	Analyst	Date	Time	Method
Conductivity	224	umhos	Heath Brown	11/02/2009	1500	120.1 (1)
Iron	1.68	mg/l	Allen Bailey	11/03/2009	1600	236.1 (1)
Manganese	0.58	mg/l	Allen Bailey	11/04/2009	0630	243.1 (1)
pH	8.58	s.u.	Steve Riddlesperger	10/29/2009	1355	150.1 (1)
Report			Sherri Fields	11/04/2009		
TSS	9	mg/l	Heath Brown	10/29/2009	1540	160.2 (1)

1) EPA-600/4-79-020 Revised March 1983

2) Standard Methods for the Examination Water and Wastes Water

3) HACH Water Analysis Handbook, 2nd Edition

4) EPA-600/4-88/039 Revised July 1991

5) EPA, Test Methods for Evaluating Solid Waste, SW-846, 3rd Edition

6) Code of Federal Regulations, Title 40, Part 136, Appendix A

APPROVED BY: Mark Williams

PERC ENGINEERING CO., INC.
P.O. Box 1712
Jasper, Alabama 35502
(205) 384-5553

Sample Number : 125213
Client : Twin Pines Coal Company, Inc.
Facility : Shannon Mine No. 2 P-3925
Job Number :
NPDES Permit # :
Basin,Stream,Well ID: 4T
Code : s
Date Taken : 09/15/2009
Sampled By : swr
Time Taken : 0932
Depth or Flow : 1.355cfs
Tests to be done : pH, Fe, Mn, Cond, TSS, Report,

Parameter	Result	Units	Analyst	Date	Time	Method
Conductivity	321	umhos	Heath Brown	09/21/2009	1025	120.1 (1)
Iron	0.71	mg/l	Allen Bailey	09/22/2009	0805	236.1 (1)
Manganese	1.01	mg/l	Allen Bailey	09/22/2009	0910	243.1 (1)
pH	9.81	s.u.	Steve Riddlesperger	09/15/2009	0932	150.1 (1)
Report			Sherri Fields	09/22/2009		
TSS	11	mg/l	Heath Brown	09/16/2009	0950	160.2 (1)

1) EPA-600/4-79-020 Revised March 1983

2) Standard Methods for the Examination Water and Wastes Water

3) HACH Water Analysis Handbook, 2nd Edition

4) EPA-600/4-88/039 Revised July 1991

5) EPA, Test Methods for Evaluating Solid Waste, SW-846, 3rd Edition

6) Code of Federal Regulations, Title 40, Part 136, Appendix A

APPROVED BY: _____

PERC ENGINEERING CO., INC.
P.O. Box 1712
Jasper, Alabama 35502
(205) 384-5553

Sample Number : 130787
Client : Twin Pines Coal Company, Inc.
Facility : Shannon Mine No. 2 P-3925
Job Number :
NPDES Permit # :
Basin,Stream,Well ID: 4T
Code : s
Date Taken : 03/19/2010
Sampled By : dcm
Time Taken : 1335
Depth or Flow : 12.06cfs
Tests to be done : pH, Fe, Mn, Cond, TSS, Report,

Parameter	Result	Units	Analyst	Date	Time	Method
Acidity	8	mg/l	Heath Brown	03/26/2010	0900	305.1 (1)
Alkalinity	220	mg/l	Heath Brown	03/26/2010	1050	310.1 (1)
Conductivity	154	umhos	Danny C. Mays	03/19/2010	1335	120.1 (1)
Iron	1.04	mg/l	Allen Bailey	03/29/2010	1440	236.1 (1)
Manganese	0.42	mg/l	Allen Bailey	03/29/2010	1525	243.1 (1)
pH	7.06	s.u.	Danny C. Mays	03/19/2010	1335	150.1 (1)
Report			Sherri Fields	03/30/2010		
Sulfate	460	mg/l	Heath Brown	03/26/2010	0800	8051 (3)
TSS	10	mg/l	Heath Brown	03/23/2010	0955	160.2 (1)

1) EPA-600/4-79-020 Revised March 1983

2) Standard Methods for the Examination Water and Wastes Water

3) HACH Water Analysis Handbook, 2nd Edition

4) EPA-600/4-88/039 Revised July 1991

5) EPA, Test Methods for Evaluating Solid Waste, SW-846, 3rd Edition

6) Code of Federal Regulations, Title 40, Part 136, Appendix A

APPROVED BY: _____

PERC ENGINEERING CO., INC.
P.O. Box 1712
Jasper, Alabama 35502
(205) 384-5553

Sample Number : 134218
Client : Twin Pines Coal Company, Inc.
Facility : Shannon Mine No. 2 P-3925
Job Number :
NPDES Permit # :
Basin,Stream,Well ID: 4T
Code : s
Date Taken : 07/15/2010
Sampled By : swr
Time Taken : 1317
Depth or Flow : 0.585cfs
Tests to be done : pH, Cond, Fe, Mn, TSS, Report,

Parameter	Result	Units	Analyst	Date	Time	Method
Conductivity	452	umhos	Heath Brown	07/20/2010	1600	120.1 (1)
Iron	0.30	mg/l	Allen Bailey	07/20/2010	1425	236.1 (1)
Manganese	2.18	mg/l	Allen Bailey	07/20/2010	1515	243.1 (1)
pH	7.09	s.u.	Steve Riddlesperger	07/15/2010	1317	150.1 (1)
Report			Sherri Fields	08/03/2010		
TSS	7	mg/l	Heath Brown	07/19/2010	1405	160.2 (1)

1) EPA-600/4-79-020 Revised March 1983

2) Standard Methods for the Examination Water and Wastes Water

3) HACH Water Analysis Handbook, 2nd Edition

4) EPA-600/4-88/039 Revised July 1991

5) EPA, Test Methods for Evaluating Solid Waste, SW-846, 3rd Edition

6) Code of Federal Regulations, Title 40, Part 136, Appendix A

APPROVED BY:_____

PERC ENGINEERING CO., INC.
P.O. Box 1712
Jasper, Alabama 35502
(205) 384-5553

Sample Number : 137978
Client : Twin Pines Coal Company, Inc.
Facility : Shannon Mine No. 2 P-3925
Job Number :
NPDES Permit # :
Basin,Stream,Well ID: 4T
Code : s
Date Taken : 12/03/2010
Sampled By : dcm
Time Taken : 1120
Depth or Flow : 2.72 cfs
Tests to be done : pH, Fe, Mn, Cond, TSS, Report,

Parameter	Result	Units	Analyst	Date	Time	Method
Conductivity	911	umhos	Danny C. Mays	12/03/2010	1120	120.1 (1)
Iron	0.23	mg/l	Allen Bailey	12/07/2010	1450	236.1 (1)
Manganese	0.95	mg/l	Allen Bailey	12/07/2010	1505	243.1 (1)
pH	7.47	s.u.	Danny C. Mays	12/03/2010	1120	150.1 (1)
Report			Sherri Fields	12/09/2010		
TSS	4	mg/l	Heath Brown	12/06/2010	1545	160.2 (1)

1) EPA-600/4-79-020 Revised March 1983

2) Standard Methods for the Examination Water and Wastes Water

3) HACH Water Analysis Handbook, 2nd Edition

4) EPA-600/4-88/039 Revised July 1991

5) EPA, Test Methods for Evaluating Solid Waste, SW-846, 3rd Edition

5) Code of Federal Regulations, Title 40, Part 136, Appendix A

APPROVED BY:_____

PERC ENGINEERING CO., INC.
P.O. Box 1712
Jasper, Alabama 35502
(205) 384-5553

Sample Number : 141219
Client : Shannon, LLC.
Facility : Shannon Mine No. 2 P-3925
Job Number :
NPDES Permit # :
Basin,Stream,Well ID: 4T
Code : s
Date Taken : 03/21/2011
Sampled By : swr
Time Taken : 1440
Depth or Flow : 3.208cfs
Tests to be done : pH, Cond, Fe, Mn, TSS, Report,

Parameter	Result	Units	Analyst	Date	Time	Method
Conductivity	352	us/cm	Heath Brown	03/28/2011	1350	120.1 (1)
Iron	0.77	mg/l	Allen Bailey	04/01/2011	1220	236.1 (1)
Manganese	0.61	mg/l	Allen Bailey	04/01/2011	1325	243.1 (1)
pH	8.13	s.u.	Steve Riddlesperger	03/21/2011	1440	150.1 (1)
Report			Sherri Fields	04/01/2011		
TSS	20	mg/l	Heath Brown	03/22/2011	1555	160.2 (1)

1) EPA-600/4-79-020 Revised March 1983

2) Standard Methods for the Examination Water and Wastes Water

3) HACH Water Analysis Handbook, 2nd Edition

4) EPA-600/4-88/039 Revised July 1991

5) EPA, Test Methods for Evaluating Solid Waste, SW-846, 3rd Edition

6) Code of Federal Regulations, Title 40, Part 136, Appendix A

APPROVED BY:_____

PERC ENGINEERING CO., INC.
P.O. Box 1712
Jasper, Alabama 35502
(205) 384-5553

Sample Number : 142903
Client : Shannon, LLC.
Facility : Shannon Mine No. 2 P-3925
Job Number :
NPDES Permit # :
Basin,Stream,Well ID: 4T
Code : s
Date Taken : 05/09/2011
Sampled By : swr
Time Taken : 1049
Depth or Flow : 1.558cfs
Tests to be done : pH, Fe, Mn, Cond, TSS, Report,

Parameter	Result	Units	Analyst	Date	Time	Method
Conductivity	267	us/cm	Heath Brown	05/11/2011	1515	120.1 (1)
Iron	0.48	mg/l	Allen Bailey	05/17/2011	1015	236.1 (1)
Manganese	0.64	mg/l	Allen Bailey	05/17/2011	1050	243.1 (1)
pH	7.70	s.u.	Steve Riddlesperger	05/09/2011	1049	150.1 (1)
Report			Sherri Fields	05/17/2011		
TSS	6	mg/l	Heath Brown	05/10/2011	1505	160.2 (1)

1) EPA-600/4-79-020 Revised March 1983

2) Standard Methods for the Examination Water and Wastes Water

3) HACH Water Analysis Handbook, 2nd Edition

4) EPA-600/4-88/039 Revised July 1991

5) EPA, Test Methods for Evaluating Solid Waste, SW-846, 3rd Edition

6) Code of Federal Regulations, Title 40, Part 136, Appendix A

APPROVED BY: Mark Williams

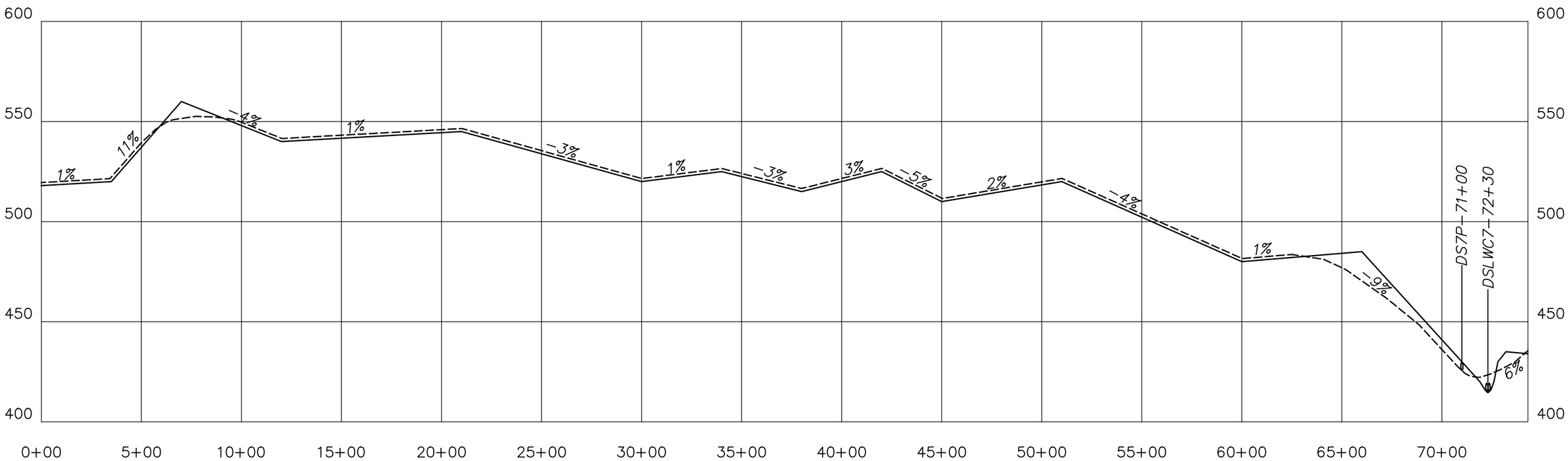

ROAD 7P

1"=400' HORZ.
1"=50' VERT.

——— *EXISTING GRADE*
– – – – – *PROPOSED FINISHED GRADE*

NOTES:

1. *FINISHED GRADES SHOWN HEREON MAY VARY FROM BETWEEN 0% AND 17%.*
2. *SEE INDIVIDUAL CROSS SECTION SHEETS FOR SPECIFIC DRAINAGE STRUCTURE INFORMATION.*

DRUMMOND COMPANY, INC.
P.O. BOX 1549 JASPER, AL 35502

Shannon, LLC
Shannon Mine
P-3859
Haulroad 7P Profile

DRAWN BY: P.T.O. DWG. NAME: DCSMHR7PPR	DATE: 11-17-11
APPROVED BY: S.R.I.	SCALE: AS NOTED

G:\Todd Odom\PTO\SRI\SHANNON\DCSMHR7PPR.dwg 11/18/11 11:02

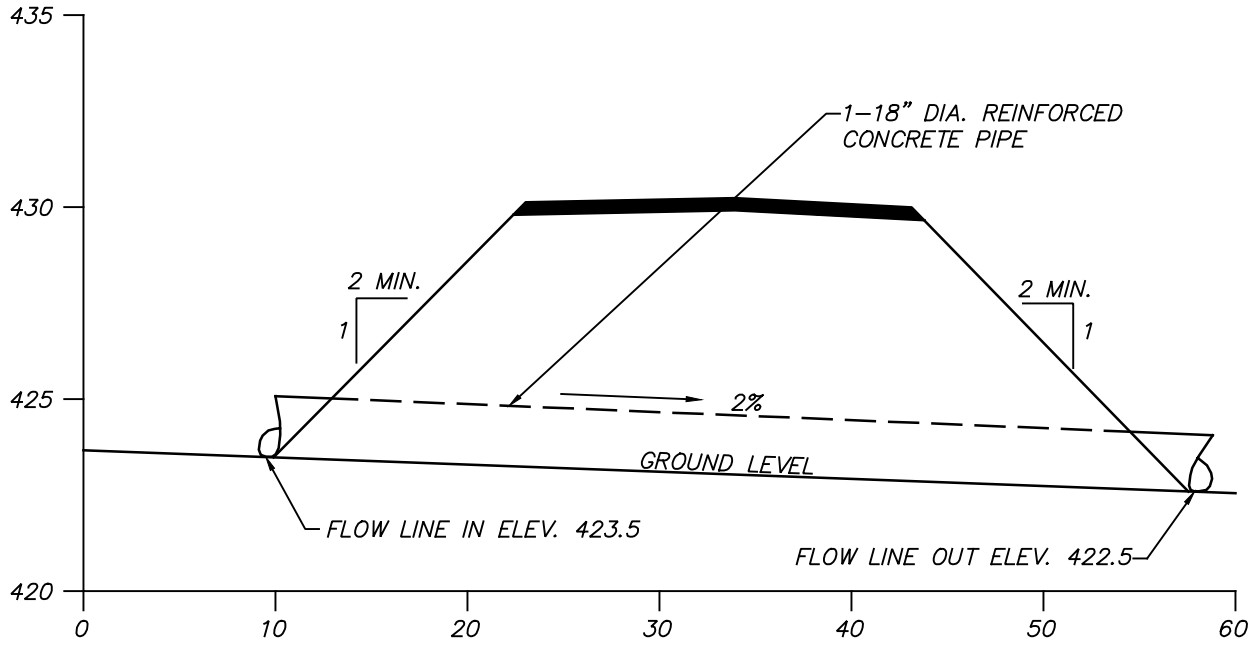

HYDRAULICS INFORMATION

DRAINAGE AREA = 2.0 ACRES
10 YR.-6YR., Q = 5.4
MAXIMUM WATER ELEV. = 424.9
MINIMUM FILL ELEV. = 430.0
MAXIMUM ALLOWABLE COVER 18" R.C.P. = 100'
MINIMUM ALLOWABLE COVER 18" R.C.P. = 2'
MINIMUM FREEBOARD = 2'

DRUMMOND COMPANY, INC.
P.O. BOX 1549 JASPER, AL 35502

Shannon, LLC
Shannon Mine
P-3859
Haulroad Cross-Section
DS7P 71+00

DRAWN BY: P.T.O. DWG. NAME: DCSMDS7P71+00	DATE: 11-21-11
APPROVED BY: S.R.I.	SCALE: AS NOTED

G:\Todd Odom\PTO\SRI\SHANNON\DCSMDS7P71+00.dwg 11/21/11 15:43

Copyright 1998 -2002 Pamela J. Schwab

Shannon, LLC
Shannon Mine
P-3859
Drainage Structure DS7P 71+00

4.8 Inches, 25 Year-6 Hour,

SCS 6 Hour

sri

General Information

Storm Information:

Storm Type:	Rainfall Event

Accumulated Time (hrs)	Accumulated Depth (in)
0.00	0.0000
0.50	0.1680
1.00	0.3840
1.50	0.6480
2.00	1.1040
2.50	2.8800
3.00	3.3600
3.50	3.7440
4.00	4.0080
4.50	4.2480
5.00	4.4400
5.50	4.6320
6.00	4.8000

Peak 30-minute Intensity: 3.552 in/hr

Structure Networking:

Type	Stru #	(flows into)	Stru #	Musk. K (hrs)	Musk. X	Description
Pond	#3	==>	End	0.000	0.000	Drainage Structure DS7P 71+00

#3
Pond

Structure Summary:

		Immediate Contributing Area (ac)	Total Contributing Area (ac)	Peak Discharge (cfs)	Total Runoff Volume (ac-ft)
#3	In	2.000	2.000	5.35	0.47
	Out			5.35	0.47

Structure Detail:

Structure #3 (Pond)

Drainage Structure DS7P 71+00

Pond Inputs:

Initial Pool Elev:	423.51 ft
Initial Pool:	0.00 ac-ft

Straight Pipe

Barrel Diameter (in)	Barrel Length (ft)	Barrel Slope (%)	Manning's n	Spillway Elev (ft)	Entrance Loss Coefficient	Tailwater Depth (ft)
18.00	100.00	2.00	0.0160	423.51	0.90	0.00

Pond Results:

Peak Elevation:	424.93 ft
Dewater Time:	0.14 days

Dewatering time is calculated from peak stage to lowest spillway

Elevation-Capacity-Discharge Table

Elevation	Area (ac)	Capacity (ac-ft)	Discharge (cfs)	Dewater Time (hrs)	
423.50	0.000	0.000	0.000		
423.51	0.000	0.000	0.000		Spillway #1
424.00	0.000	0.000	1.079	2.45	
424.50	0.000	0.000	3.094		
424.93	0.000	0.000	5.354	1.00	Peak Stage
425.00	0.000	0.000	5.715		
425.50	0.000	0.000	8.377		
426.00	0.000	0.000	10.434		
426.50	0.000	0.000	12.141		
427.00	0.000	0.000	13.428		
427.50	0.000	0.001	14.252		
428.00	0.000	0.001	14.976		
428.50	0.001	0.001	15.667		
429.00	0.001	0.001	16.358		
429.50	0.001	0.002	16.998		
430.00	0.001	0.002	17.611		

Detailed Discharge Table

Elevation (ft)	Straight Pipe (cfs)	Combined Total Discharge (cfs)
423.50	0.000	0.000
423.51	0.000	0.000
424.00	(3)>1.079	1.079
424.50	(3)>3.094	3.094
425.00	(3)>5.715	5.715
425.50	(5)>8.377	8.377
426.00	(5)>10.434	10.434
426.50	(5)>12.141	12.141
427.00	(6)>13.428	13.428
427.50	(6)>14.252	14.252
428.00	(6)>14.976	14.976
428.50	(6)>15.667	15.667
429.00	(6)>16.358	16.358
429.50	(6)>16.998	16.998
430.00	(6)>17.611	17.611

Subwatershed Hydrology Detail:

Stru #	SWS #	SWS Area (ac)	Time of Conc (hrs)	Musk K (hrs)	Musk X	Curve Number	UHS	Peak Discharge (cfs)	Runoff Volume (ac-ft)
#3	1	2.000	0.055	0.000	0.000	81.000	F	5.35	0.466
	Σ	**2.000**						**5.35**	**0.466**

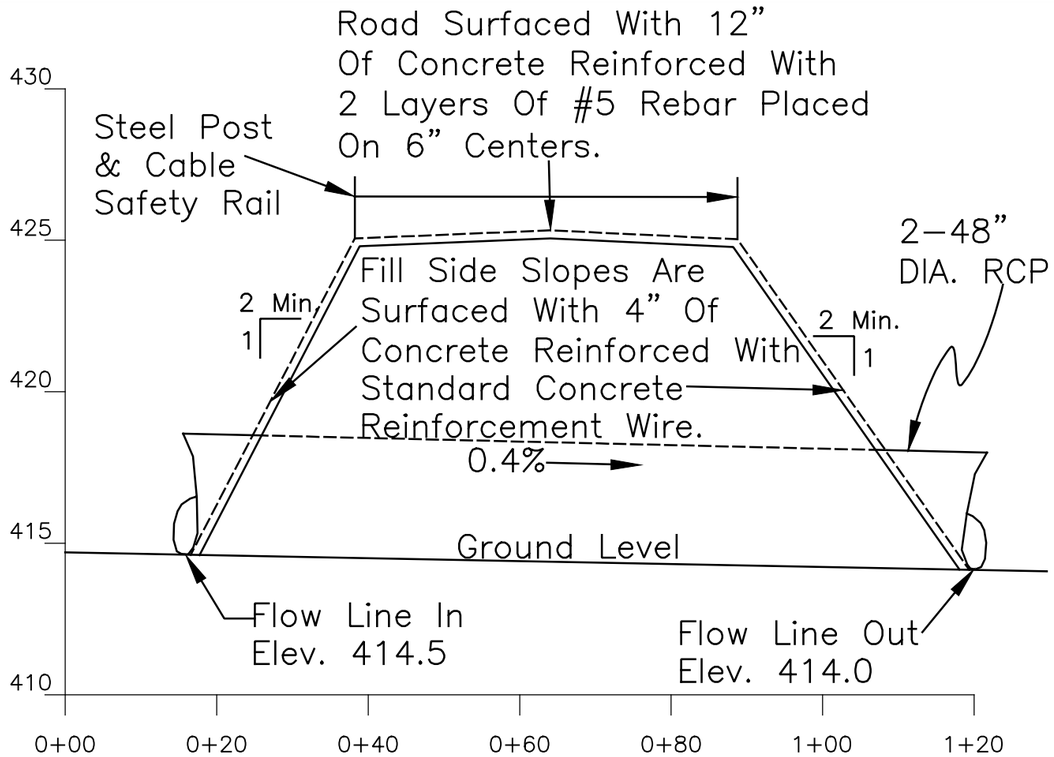

Cross Section A–A'

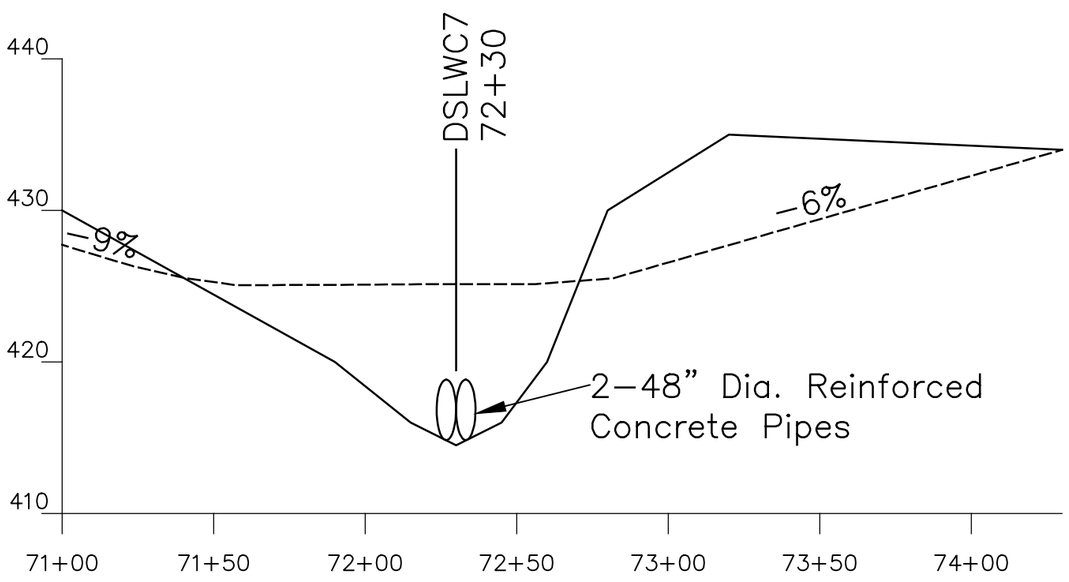

Cross Section B–B'

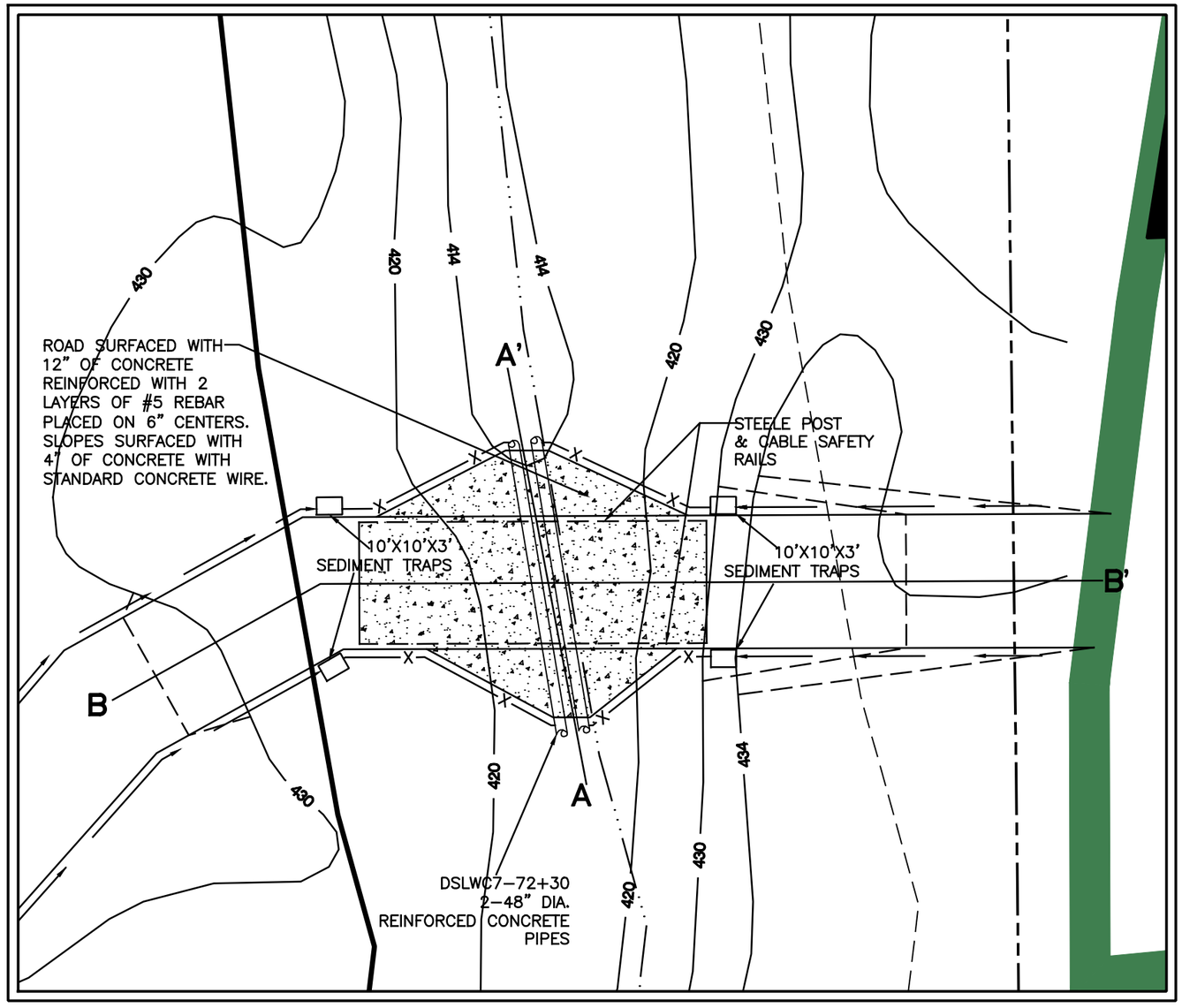

Map Legend

—X—X— Silt Fence

——→ Road Ditch

ASMC Permit P-3925

Plan View

Scale: 1"=50'

Hydraulics Information

Drainage Area = 6,720 Acres
Normal Flow = 148.7 cfs
Normal Water Elev. = 419.3
Maximum Fill Elev. = 425

DRUMMOND COMPANY, INC.
P.O. BOX 1549 JASPER, AL 35502

Shannon, LLC
Shannon Mine No. 2
P-3925
Drainage Structure DSLWC7-72+30

DRAWN BY: P.T.O. DWG. NAME: TPSM2LWC7230	DATE: 6-18-07
APPROVED BY: S.R.I.	SCALE: AS NOTED

G:\Todd Odom\PTO\SR\SHANNON\DCSM2LWC7230.dwg 11/18/11 10:26

Copyright 1998 -2002 Pamela L Schwab

Shannon, LLC

Shannon Mine No. 2

P-3925

Drainage Structure DSLWC7 72+50

4.8 Inches, 25 Year-6 Hour,

SCS 6 Hour

sri

General Information

Storm Information:

Storm Type:	Rainfall Event

Accumulated Time (hrs)	Accumulated Depth (in)
0.00	0.0000
0.50	0.1680
1.00	0.3840
1.50	0.6480
2.00	1.1040
2.50	2.8800
3.00	3.3600
3.50	3.7440
4.00	4.0080
4.50	4.2480
5.00	4.4400
5.50	4.6320
6.00	4.8000

Peak 30-minute Intensity: 3.552 in/hr

Structure Networking:

Type	Stru #	(flows into)	Stru #	Musk. K (hrs)	Musk. X	Description
Pond	#3	==>	End	0.000	0.000	Drainage Structure DSLWC7 72+30

#3
Pond

Structure Summary:

		Immediate Contributing Area (ac)	Total Contributing Area (ac)	Peak Discharge (cfs)	Total Runoff Volume (ac-ft)
#3	In	6,720.000	6,720.000	749.05	685.29
	Out			748.50	685.30

Structure Detail:

Structure #3 (Pond)

Drainage Structure DSLWC7 72+30

Pond Inputs:

Initial Pool Elev:	414.51 ft
Initial Pool:	0.00 ac-ft

Straight Pipe

Barrel Diameter (in)	Barrel Length (ft)	Barrel Slope (%)	Manning's n	Spillway Elev (ft)	Entrance Loss Coefficient	Tailwater Depth (ft)
48.00	100.00	0.00	0.0160	414.51	0.90	0.00

Straight Pipe

Barrel Diameter (in)	Barrel Length (ft)	Barrel Slope (%)	Manning's n	Spillway Elev (ft)	Entrance Loss Coefficient	Tailwater Depth (ft)
48.00	100.00	0.00	0.0160	414.51	0.90	0.00

Emergency Spillway

Spillway Elev	Crest Length (ft)	Left Sideslope	Right Sideslope	Bottom Width (ft)
425.00	10.00	10.00:1	10.00:1	50.00

Pond Results:

Peak Elevation:	426.69 ft
Dewater Time:	1.72 days

Dewatering time is calculated from peak stage to lowest spillway

Elevation-Capacity-Discharge Table

Elevation	Area (ac)	Capacity (ac-ft)	Discharge (cfs)	Dewater Time (hrs)	
414.50	0.000	0.000	0.000		
414.51	0.000	0.000	0.000		Spillway #1 Spillway #2

Elevation	Area (ac)	Capacity (ac-ft)	Discharge (cfs)	Dewater Time (hrs)	
415.00	0.007	0.001	5.694	0.05	
415.50	0.023	0.008	19.089		
416.00	0.051	0.026	33.543	14.60	
416.50	0.088	0.061	46.721	13.50	
417.00	0.136	0.116	58.525	1.05	
417.50	0.194	0.199	72.849	0.70	
418.00	0.263	0.312	92.950	0.65	
418.50	0.342	0.463	115.678	0.55	
419.00	0.431	0.656	138.546	0.30	
419.50	0.530	0.895	156.389	0.25	
420.00	0.640	1.187	179.317	0.25	
420.50	0.760	1.537	199.576	0.20	
421.00	0.890	1.949	217.948	0.15	
421.50	1.031	2.429	234.874	0.20	
422.00	1.182	2.982	250.710	0.15	
422.50	1.343	3.612	265.563	0.15	
423.00	1.515	4.326	279.679	0.20	
423.50	1.697	5.129	293.052	0.20	
424.00	1.889	6.025	305.874	0.20	
424.50	2.091	7.019	318.198	0.25	
425.00	2.304	8.118	330.045	0.35	Spillway #3
425.50	2.527	9.325	351.882	0.70	
426.00	2.761	10.647	495.226	2.15	
426.50	3.005	12.088	668.019	2.55	
426.69	3.103	12.672	748.502	2.00	Peak Stage
427.00	3.259	13.654	883.823		
427.50	3.523	15.349	1,148.584		
428.00	3.798	17.179	1,463.714		
428.50	4.083	19.148	1,830.915		
429.00	4.378	21.263	2,252.016		
429.50	4.684	23.528	2,728.888		
430.00	5.000	25.949	3,263.403		

Detailed Discharge Table

Elevation (ft)	Straight Pipe (cfs)	Straight Pipe (cfs)	Emergency Spillway (cfs)	Combined Total Discharge (cfs)
414.50	0.000	0.000	0.000	0.000
414.51	0.000	0.000	0.000	0.000
415.00	(1)>2.847	(1)>2.847	0.000	5.694
415.50	(1)>9.544	(1)>9.544	0.000	19.089
416.00	(1)>16.772	(1)>16.772	0.000	33.543
416.50	(1)>23.360	(1)>23.360	0.000	46.721
417.00	(1)>29.262	(1)>29.262	0.000	58.525
417.50	(1)>36.424	(1)>36.424	0.000	72.849
418.00	(1)>46.475	(1)>46.475	0.000	92.950
418.50	(1)>57.839	(1)>57.839	0.000	115.678
419.00	(1)>69.273	(1)>69.273	0.000	138.546
419.50	(6)>78.195	(6)>78.195	0.000	156.389
420.00	(6)>89.659	(6)>89.659	0.000	179.317
420.50	(6)>99.788	(6)>99.788	0.000	199.576
421.00	(6)>108.974	(6)>108.974	0.000	217.948
421.50	(6)>117.437	(6)>117.437	0.000	234.874
422.00	(6)>125.355	(6)>125.355	0.000	250.710
422.50	(6)>132.781	(6)>132.781	0.000	265.563
423.00	(6)>139.839	(6)>139.839	0.000	279.679
423.50	(6)>146.526	(6)>146.526	0.000	293.052
424.00	(6)>152.937	(6)>152.937	0.000	305.874
424.50	(6)>159.099	(6)>159.099	0.000	318.198
425.00	(6)>165.022	(6)>165.022	0.000	330.045
425.50	(6)>170.732	(6)>170.732	10.417	351.882
426.00	(6)>176.261	(6)>176.261	142.705	495.226
426.50	(6)>181.623	(6)>181.623	304.773	668.019
427.00	(6)>186.832	(6)>186.832	510.158	883.823
427.50	(6)>191.900	(6)>191.900	764.784	1,148.584
428.00	(6)>196.838	(6)>196.838	1,070.037	1,463.714
428.50	(6)>201.656	(6)>201.656	1,427.604	1,830.915
429.00	(6)>206.361	(6)>206.361	1,839.294	2,252.016
429.50	(6)>210.963	(6)>210.963	2,306.963	2,728.888
430.00	(6)>215.467	(6)>215.467	2,832.468	3,263.403

Subwatershed Hydrology Detail:

Stru #	SWS #	SWS Area (ac)	Time of Conc (hrs)	Musk K (hrs)	Musk X	Curve Number	UHS	Peak Discharge (cfs)	Runoff Volume (ac-ft)
#3	1	6,720.000	6.500	0.000	0.000	70.000	S	749.05	685.292
	Σ	**6,720.000**						**749.05**	**685.292**

Shannon, LLC
Shannon Mine
P-3859
Soil Classification

Shannon, LLC
Shannon Mine
P-3859

STABILITY ANALYSIS DATA

METHODOLOGY

Due to the fill at Drainage Structure DSLWC7 72+30 being the most adverse fill sections of Haulroad 7P at the Shannon Mine, a stability analysis was performed to prove their safety. The static loading stability analysis was performed using the Simplified Bishop Method. The computer program used was the REAME Slope Stability Program as developed by Dr. Yang H. Haung, P.E. of the University of Kentucky.

SOIL CLASSIFICATION UNITS

The soil types used in the construction of the fill section of Drainage Structure DSLWC7 72+30 (SM) and the soil types (soil classification) of the material between the proposed fill and stiff base of Drainage Structure DSLWC7 72+30 (Bed Rock) were taken from the design plans of Basin 044A of P-3859. Basin 044A is adjacent to the proposed Drainage Structure DSLWC7 72+30 therefore the fill material will be similar. The material was sampled and analyzed by PERC Engineering Co., Inc. The soil properties used in the stability analysis (ML) type soils, were taken from the U.S. Department of the Interior Bureau of Reclamation Design of Small Dams.*

SOIL PROPERTIES

	UNIFIED CLASS	COHESION (PSF)	ANGLE OF INT. FRICTION	DESIGN DENSITY (PCF)
Drainage Structure DSLWC7 72+30 Fill Material	ML	100.8	29.7	129.5
Drainage Structure DSLWC7 72+30 Foundation Material	Bedrock	10,000.0	45.0	170.0

*United States Department of Interior Bureau of Reclamation Design of Small Dams page 137.

STABILITY ANALYSIS DATA

(Continued)

DESIGN DATA

1) Safety factors for embankments with 2 H:1V slopes.
2) DMIN = 0.00
3) Pore pressure ration = .1.

SAFETY FACTORS

DRAINAGE STRUCTURE NUMBER	STATIC SAFETY FACTOR
Drainage Structure DSLWC7 72+30	1.948

FOUNDATIONS AND ABUTMENTS

The foundation and abutments area will be inspected for visible structural deficiencies after clearing and grubbing, and if found they will be treated using sound engineering practices.

Shannon, LLC
Shannon Mine
P-3859
Drainage Structure DSLWC7 72+30
Stability Analysis

REAME (Rotational Equilibrium Analysis of Multilayered Embankments)
Implemented on the 16-bit Microcomputers C. F. Hains, Jr. and D. M. Hains
2301 22nd Ave.
Northport, AL 35476
(205)-339-6536

Shannon, LLC Shannon Mine P-3859 Drainage Structure DSLWC7 72+50 Static

Number of cases to be analyzed 1

Case Number 1

Number of boundary lines= 3
Number of points on boundary lines are: 2 4 6

On boundary line no. 1 Point no. and coordinates are:
1 100.000 414.500 2 400.000 413.300

On boundary line no. 2 Point no. and coordinates are:
1 100.000 414.900 2 200.000 414.500 3 292.742 414.129 4 400.000 413.700

On boundary line no. 3 Point no. and coordinates are:
1 100.000 414.900 2 200.000 414.500 3 221.000 425.000 4 271.000 425.000 5 292.742 414.129
6 400.000 413.700

Line no. and slope of each segment are:
1 -.004
2 -.004 -.004 -.004
3 -.004 .500 .000 -.500 -.004

No. of radius control zones= 1 Plot or no plot= 1 No. of seepage cases= 1

Total no. of lines at bottom of radius control zones is: 1

For rad. cont. zone no. 1 Radius decrement= .000 No. of Circles= 5 Id no. for first circle=, 1
Line no.= 1 Begin pt. no.= 1 End pt. no.= 2

Soil no.	Cohesion	F. angle	Unit wt.
1	10000.000	45.000	170.000
2	100.800	29.700	129.500

Seismic coefficient= .000 Min. depth of tallest slice= .000 Unit weight of water= 62.400

The factors of safety are determined by the SIMPLIFIED BISHOP method

NSPG= 2 NSRCH= 0 No. of slices= 10 No. of add. radii= 2

Pore pressure ratio= .100

point1=(280.000, 425.000) point2=(300.000, 425.000) point3=(300.000, 450.000) NJ= 4 NI= 5
Automatic search will follow after grid with XINC= 10.000 and YINC= 12.000

At point (280.000, 425.000) under seepage 1,the radius and the corresponding factor of safety are:
11.220 18.778 9.781 2.641 8.342 2.635 6.903 2.803 5.464 3.538
9.301 2.635 8.822 2.614 7.862 2.668 7.383 2.721
Lowest factor of safety= 2.614 and occurs at radius = 8.822

At point (285.000, 425.000) under seepage 1,the radius and the corresponding factor of safety are:
11.240 23.963 10.244 2.388 9.248 2.520 8.253 2.859 7.257 4.057
10.908 11.933 10.576 2.363 9.912 2.420 9.580 2.463
Lowest factor of safety= 2.363 and occurs at radius = 10.576

****WARNING AT NEXT CENTER**** When radius is 10.892
center of circle lies below ground line or circle does not intercept ground line properly, or the circle cuts the slope
very slightly, so a large factor of safety is assigned.

At point (290.000, 425.000) under seepage 1,the radius and the corresponding factor of safety are:
11.260 45.738 10.707 2.617 10.155 2.961 9.602 3.696

9.050 5.997
11.076 37.319 10.892********** 10.523 2.708 10.339 2.821

Lowest factor of safety= 2.617 and occurs at radius = 10.707

At point (295.000, 425.000) under seepage 1,the radius and the corresponding factor of safety are:
11.280 428.387
Lowest factor of safety= 428.387 and occurs at radius = 11.280

At point (300.000, 425.000) under seepage 1,the radius and the corresponding factor of safety are:
11.300 56736.350
Lowest factor of safety= 56736.350 and occurs at radius = 11.300

At point (280.000, 430.000) under seepage 1,the radius and the corresponding factor of safety are:
16.220 17.293 14.675 2.396 13.131 2.341 11.586 2.397
10.042 3.067
14.160 2.371 13.646 2.350 12.616 2.341 12.101 2.357

Lowest factor of safety= 2.341 and occurs at radius = 13.131

At point (285.000, 430.000) under seepage 1,the radius and the corresponding factor of safety are:
16.240 19.484 15.139 2.097 14.037 2.219 12.936 2.536
11.834 3.635
15.873 7.610 15.506 2.080 14.771 2.123 14.404 2.164

Lowest factor of safety= 2.080 and occurs at radius = 15.506

At point (290.000, 430.000) under seepage 1,the radius and the corresponding factor of safety are:
16.260 34.381 15.602 2.313 14.944 2.601 14.285 3.217
13.627 5.149
16.041 25.800 15.821 2.250 15.382 2.389 15.163 2.483

Lowest factor of safety= 2.250 and occurs at radius = 15.821

At point (295.000, 430.000) under seepage 1,the radius and the corresponding

factor of safety are:
16.280 158.089
Lowest factor of safety= 158.089 and occurs at radius = 16.280

At point (300.000, 430.000) under seepage 1,the radius and the corresponding factor of safety are:
16.300 56239.910
Lowest factor of safety= 56239.910 and occurs at radius = 16.300

At point (280.000, 435.000) under seepage 1,the radius and the corresponding factor of safety are:
21.220 17.478 19.570 2.447 17.920 2.414 16.269 2.477
14.619 2.968
19.020 2.431 18.470 2.418 17.370 2.419 16.819 2.437

Lowest factor of safety= 2.414 and occurs at radius = 17.920

****WARNING AT NEXT CENTER**** When radius is 20.838
center of circle lies below ground line or circle does not intercept ground line properly, or the circle cuts the slope
very slightly, so a large factor of safety is assigned.

At point (285.000, 435.000) under seepage 1,the radius and the corresponding factor of safety are:
21.240 18.241 20.033 2.031 18.826 2.087 17.619 2.339
16.412 3.355
20.838********** 20.435 2.028 19.631 2.040 19.228 2.058

Lowest factor of safety= 2.028 and occurs at radius = 20.435

At point (290.000, 435.000) under seepage 1,the radius and the corresponding factor of safety are:
21.260 27.354 20.496 2.118 19.732 2.365 18.969 2.894
18.205 4.557
21.005 18.876 20.751 2.065 20.242 2.183 19.987 2.264

Lowest factor of safety= 2.065 and occurs at radius = 20.751

****WARNING AT NEXT CENTER**** When radius is 20.959
center of circle lies below ground line or circle does not intercept ground line properly, or the circle cuts the slope

very slightly, so a large factor of safety is assigned.

At point (295.000, 435.000) under seepage 1,the radius and the corresponding factor of safety are:

21.280 88.316 20.959**********

Lowest factor of safety= 88.316 and occurs at radius = 21.280

At point (300.000, 435.000) under seepage 1,the radius and the corresponding factor of safety are:

21.300 55976.070

Lowest factor of safety= 55976.070 and occurs at radius = 21.300

At point (280.000, 440.000) under seepage 1,the radius and the corresponding factor of safety are:

26.220 18.040 24.464 2.561 22.708 2.566 20.953 2.683
19.197 3.269
25.635 2.582 25.049 2.570 23.879 2.556 23.294 2.557

Lowest factor of safety= 2.556 and occurs at radius = 23.879

At point (285.000, 440.000) under seepage 1,the radius and the corresponding factor of safety are:

26.240 18.297 24.927 2.094 23.615 2.135 22.302 2.313
20.990 3.099
25.802 2.096 25.365 2.093 24.490 2.100 24.052 2.113

Lowest factor of safety= 2.093 and occurs at radius = 25.365

At point (290.000, 440.000) under seepage 1,the radius and the corresponding factor of safety are:

26.260 23.874 25.391 1.988 24.521 2.187 23.652 2.657
22.783 4.116
25.970 14.529 25.680 1.951 25.101 2.036 24.811 2.100

Lowest factor of safety= 1.951 and occurs at radius = 25.680

At point (295.000, 440.000) under seepage 1,the radius and the corresponding factor of safety are:

26.280 58.418 25.854 2.671 25.428 3.164 25.002 4.164
24.576 7.197
26.138 52.039 25.996 39.596 25.712 2.805 25.570 2.966

Lowest factor of safety= 2.671 and occurs at radius = 25.854

At point (300.000, 440.000) under seepage 1,the radius and the corresponding factor of safety are:
26.300 55797.530
Lowest factor of safety= 55797.530 and occurs at radius = 26.300

At point (280.000, 445.000) under seepage 1,the radius and the corresponding factor of safety are:
31.220 18.765 29.362 2.693 27.505 2.740 25.647 2.933
23.789 3.730
30.601 2.694 29.981 2.691 28.743 2.700 28.124 2.715

Lowest factor of safety= 2.691 and occurs at radius = 29.981

At point (285.000, 445.000) under seepage 1,the radius and the corresponding factor of safety are:
31.240 18.886 29.822 2.195 28.404 2.246 26.986 2.422
25.568 3.118
30.767 2.192 30.294 2.192 29.349 2.205 28.876 2.221

Lowest factor of safety= 2.192 and occurs at radius = 30.294

At point (290.000, 445.000) under seepage 1,the radius and the corresponding factor of safety are:
31.260 22.781 30.285 1.985 29.310 2.115 28.335 2.458
27.360 3.775
30.935 11.811 30.610 1.962 29.960 2.017 29.635 2.059

Lowest factor of safety= 1.962 and occurs at radius = 30.610

****WARNING AT NEXT CENTER**** when RADIUS is 30.925
either the OVERTURNING or the RESISTING MOMENT is 0, so a large factor of safety is assigned

At point (295.000, 445.000) under seepage 1,the radius and the corresponding factor of safety are:
31.280 42.517 30.748 2.359 30.217 2.750 29.685 3.547
29.153 5.974
31.103 35.420 30.925********** 30.571 2.465 30.394 2.593

Lowest factor of safety= 2.359 and occurs at radius = 30.748

At point (300.000, 445.000) under seepage 1,the radius and the corresponding factor of safety are:

31.300 55671.650

Lowest factor of safety= 55671.650 and occurs at radius = 31.300

At point (280.000, 450.000) under seepage 1,the radius and the corresponding factor of safety are:

36.220 19.526 34.290 2.831 32.360 2.921 30.430 3.190 28.500 4.201
35.576 2.811 34.933 2.818 33.647 2.850 33.003 2.879

Lowest factor of safety= 2.811 and occurs at radius = 35.576

At point (285.000, 450.000) under seepage 1,the radius and the corresponding factor of safety are:

36.240 19.465 34.716 2.313 33.193 2.380 31.669 2.584 30.145 3.340
35.732 2.301 35.224 2.305 34.208 2.327 33.700 2.349

Lowest factor of safety= 2.301 and occurs at radius = 35.732

At point (290.000, 450.000) under seepage 1,the radius and the corresponding factor of safety are:

36.260 22.484 35.179 2.044 34.099 2.153 33.019 2.431 31.938 3.429
35.900 9.103 35.539 2.024 34.819 2.070 34.459 2.105

Lowest factor of safety= 2.024 and occurs at radius = 35.539

At point (295.000, 450.000) under seepage 1,the radius and the corresponding factor of safety are:

36.280 35.108 35.643 2.143 35.005 2.449 34.368 3.134 33.731 5.155
36.067 26.795 35.855 2.080 35.430 2.222 35.218 2.321

Lowest factor of safety= 2.080 and occurs at radius = 35.855

At point (300.000, 450.000) under seepage 1,the radius and the corresponding factor of safety are:

36.300 55613.140

Lowest factor of safety= 55613.140 and occurs at radius = 36.300

For pore pressure ratio .100

At point (290.000, 440.000) ,RADIUS 25.680

the minimum factor of safety is 1.951

At point (290.000, 440.000) under seepage 1,the radius and the corresponding factor of safety are:

26.260 23.874 25.391 1.988 24.521 2.187 23.652 2.657 22.783 4.116

25.970 14.529 25.680 1.951 25.101 2.036 24.811 2.100

Lowest factor of safety= 1.951 and occurs at radius = 25.680

At point (300.000, 440.000) under seepage 1,the radius and the corresponding factor of safety are:

26.300 55797.530

Lowest factor of safety= 55797.530 and occurs at radius = 26.300

At point (280.000, 440.000) under seepage 1,the radius and the corresponding factor of safety are:

26.220 18.040 24.464 2.561 22.708 2.566 20.953 2.683 19.197 3.269

25.635 2.582 25.049 2.570 23.879 2.556 23.294 2.557

Lowest factor of safety= 2.556 and occurs at radius = 23.879

At point (290.000, 452.000) under seepage 1,the radius and the corresponding factor of safety are:

38.260 22.496 37.137 2.076 36.014 2.182 34.892 2.452 33.769 3.385

37.886 7.775 37.511 2.056 36.763 2.102 36.389 2.136

Lowest factor of safety= 2.056 and occurs at radius = 37.511

****WARNING AT NEXT CENTER**** When radius is 13.849
center of circle lies below ground line or circle does not intercept ground line properly, or the circle cuts the slope
very slightly, so a large factor of safety is assigned.

At point (290.000, 428.000) under seepage 1,the radius and the corresponding factor of safety are:

14.260	38.204	13.644	2.416	13.028	2.725	12.412	3.384
11.796	5.447						
14.055	29.826	13.849**********		13.439	2.498	13.233	2.599

Lowest factor of safety= 2.416 and occurs at radius = 13.644

At point (292.500, 440.000) under seepage 1,the radius and the corresponding factor of safety are:

26.270	33.053	25.622	2.191	24.974	2.500	24.327	3.144
23.679	5.124						
26.054	25.222	25.838	2.122	25.406	2.274	25.190	2.375

Lowest factor of safety= 2.122 and occurs at radius = 25.838

At point (287.500, 440.000) under seepage 1,the radius and the corresponding factor of safety are:

26.250	20.123	25.159	1.985	24.068	2.079	22.977	2.370
21.886	3.525						
25.886	7.986	25.523	1.971	24.795	2.006	24.432	2.036

Lowest factor of safety= 1.971 and occurs at radius = 25.523

At point (290.000, 443.000) under seepage 1,the radius and the corresponding factor of safety are:

29.260	23.094	28.327	1.974	27.395	2.124	26.462	2.524
25.529	3.902						
28.949	12.846	28.638	1.948	28.016	2.010	27.705	2.057

Lowest factor of safety= 1.948 and occurs at radius = 28.638

At point (290.000, 446.000) under seepage 1,the radius and the corresponding factor of safety are:

32.260	22.670	31.264	1.994	30.268	2.118	29.272	2.439
28.276	3.715						

31.928 11.300 31.596 1.971 30.932 2.024 30.600 2.064

Lowest factor of safety= 1.971 and occurs at radius = 31.596

At point (292.500, 443.000) under seepage 1,the radius and the corresponding factor of safety are:
29.270 29.802 28.559 2.083 27.848 2.371 27.137 2.955
26.426 4.757
29.033 21.407 28.796 2.025 28.322 2.158 28.085 2.256

Lowest factor of safety= 2.025 and occurs at radius = 28.796

****WARNING AT NEXT CENTER**** When radius is 28.865
center of circle lies below ground line or circle does not intercept ground line properly, or the circle cuts the slope
very slightly, so a large factor of safety is assigned.

At point (287.500, 443.000) under seepage 1,the radius and the corresponding factor of safety are:
29.250 20.069 28.096 2.019 26.941 2.102 25.787 2.342
24.633 3.335
28.865********** 28.480 2.009 27.711 2.038 27.326 2.064

Lowest factor of safety= 2.009 and occurs at radius = 28.480

For pore pressure ratio .100

At point (290.000, 443.000) ,RADIUS 28.638
the minimum factor of safety is 1.948

1

Cross section in distorted scale. Numerals indicate boundary line no.
If there area more than 10 bound. lines, alphabets will then be used. P indicates
Piezometric line. If a portion of Piezometric line coincides with
the ground or another boundary line, only the ground or boundary
line will be shown. X indicates intersection of two boundary
lines. * indicates failure surface.
The minimum factor of safety is 1.948

```
4.300E+02 X+++++++++X+++++++++X+++++++++X+++++++++X+++++++++X
          +                    +
          +                    +
          +                    +
          +                    +
4.280E+02 X     +     +     +     +     X
          +                    +
          +                    +
          +                    +
          +                    +
4.260E+02 X     +     +     +     +     X
          +                    +
          +                    +
          +          3333333        +
          +                    +
4.240E+02 X     +     +     +     +     X
          +                    +
          +                    +
          +                    +
          +                    +
4.220E+02 X     +     +     +     +     X
          +                    +
          +          3     3     +
          +                    +
          +                    +
4.200E+02 X     +     +     +     +     X
          +                    +
          +                    +
          +                    +
          +                    +
4.180E+02 X     +     +     *     +     X
          +          3     3     +
          +                    +
          +                    +
          +                    +
4.160E+02 X     +     +     +     +     X
          +                    +
          +                    +
          +   XXXXXXXXXXXX     *          +
          +   111111111111X22222222222          +
4.140E+02 X     +     +111111111111XXXXXXXXXXXXX   X
          +                111111111111X  +
          +                      1  +
          +                    +
          +                    +
4.120E+02 X     +     +     +     +     X
          +                    +
          +                    +
          +                    +
          +                    +
4.100E+02 X+++++++++X+++++++++X+++++++++X+++++++++X+++++++++X
0         4.00E+01  1.20E+02  2.00E+02  2.80E+02  3.60E+02  4.40E+02
```