Applicant: Quality Coal Co., Inc.
Mine Name: Sparks Branch Mine No. 2
Permit Number: P-3947

Part III - Operation Plan

A. General Operation Information

1. Describe the type and method of coal mining procedures and major equipment to be used. (780.11)

   See Attachment III-A-1

Major equipment to be used includes but may not be limited to:

- Backhoes
- Bulk Anfo Trucks
- Off Road Haulers
- Loaders
- Service Trucks
- Dozers
- Track Backhoes
- Drills

2. Describe the sequence and timing of increments to be mined (as shown on permit map) over the total life of the permit. (780.11)

   The timing increments are as follows:

Increment No.	Acres	From	Estimated Life
1	49	Issuance of Permit	12 Months
2	85	End of Increment #1	12 Months
3	79	End of Increment #2	12 Months
4	50	End of Increment #3	12 Months
5	105	End of Increment #4	12 Months
6	17	Issuance of Permit	End of Permit

The sequence of mining operations will be generally as follows:

1) Construction of Sediment Control Structures
2) Clearing and Grubbing
3) Topsoil Removal (if required)
4) Overburden Drilling and Blasting
5) Overburden Removal
6) Coal Recovery
7) Re-Grading
8) Revegetation

Applicant: Quality Coal Co., Inc.
Mine Name: Sparks Branch Mine No. 2
Permit Number: P-

ATTACHMENT III-A-1
TYPE AND METHOD OF COAL MINING PROCEDURES

The area method of surface mining will be used. Preparation will consist of (a) timber removal (b) topsoil removal (if required) (C) drilling and blasting of overburden (d) overburden removal (e) coal removal (f) regrading and revegetation. Once the site has been regraded and topsoiled (if required) soil samples will be analyzed (where required) and proper nutrients will be added before revegetation. Any problem that may arise will be handled by proper consulting personnel utilizing various support equipment and support personnel. All approved drainage controls will be implemented within their respective areas as per approved plans prior to disturbance there within.

Mining will commence within Increment No. 1 along the existing highwall on the Mary Lee Seam in the SW/NE and SE/NE of Section 15, Township 14 South, Range 8 West, Walker County, Alabama. Pits will generally align east to west with advancement to the south. Spoil material from cut no. 1 and half of cut no. 2 will be spread out over the previously mined area north and west of cut no. 1 at no greater height than four (4) feet. The remaining half of cut no. 2 and subsequent cuts will be spoiled within the open highwall and subsequent open pits. Mining will continue in this manner until the limits of the increment are reached.

Mining within Increment No. 2 will be a continuation of mining of Increment No. 1. Pits will generally align east to west with advancement to the south. Spoil material will be placed in the open highwall and subsequent open pits. Mining will continue in this manner until the limits of the increment are reached.

Mining within Increment No. 3 will be a continuation of mining of Increment No. 2 with cuts no. 1 through 4. Pits will generally align east to west with advancement to the south. Spoil material will be placed within the open highwall and subsequent open pits. Cut no. 5 will commence along the existing highwall and Blue Creek Coal Seam as shown on Attachment III-A-1 within the SE/SW and SW/SE of Section 15. Pits will generally align east to west with advancement to the south. Spoil material from cut no. 5 and 6 will be placed in the open highwall of cuts no. 2 through 4 and the spoil material from cuts no. 7 through 15 will be placed in subsequent open pits. Mining will continue in this manner until the limits of the increment are reached. Cuts no. 1 through 4 will encounter the Mary Lee seam only while cuts no. 5 thru 15 will encounter the Mary Lee and Blue Creek seams.

Mining within Increment No. 4 will be a continuation of mining of Increment No. 3. Pits will generally align east to west with advancement to the south. Spoil material will be placed in the open highwall and subsequent open pits. Mining will continue in this manner until the limits of the increment are reached.

Applicant: Quality Coal Co., Inc.
Mine Name: Sparks Branch Mine No. 2
Permit Number: P-

Mining within Increment No. 5 will begin in the SW/SW of Section 14, Township 14 South, Range 8 West, Walker County, Alabama. Cut No. 1 will commence along the Mary Lee outcrop on the northern boundary of Increment No. 5 just south of Basin 024P. Spoil material from the cut no. 1 and no. 2 will be spoiled north of Basin 024 and will be transported via mobile equipment and spread out over the previously mined area southwest of Basin 025P. The spoil material from the following cuts will be spoiled within the pits created by the previous cuts. Pits will generally align southwest to northeast with advancement to the southeast. Mining will continue in this manner until the Blue Creek seam is encountered in cut No. 2. Subsequent pits will contain the Mary Lee and Blue Creek seams with mining operations recovering both seams. Mining will continue in this manner until the limits of increment and the permit boundary are reached.

Mining of Increment No. 5 will mine through and not reconstruct two existing pre-law final cut water impoundments within P-3687. The impoundments will be dewatered prior to commencement of mining by pumping the impounded water into a certified sediment basin.

Along with coal recovery, the fire clay that lies below the Mary Lee Coal Seam will be recovered by Burton Industries, LLC. Clay recovery will commence following coal removal within a cut. After the clay is removed the next cut be drilled and shot. This dual mining sequence will not cause any delays in mining or reclamation. The clay will not be stockpiled within the permit boundary, it will be transported offsite via mobile equipment.

See Attachment III.-A.-1. Operations Map for cut layout information.

Applicant: Quality Coal Co., Inc.
Mine Name: Sparks Branch Mine No. 2
Permit Number: P-

3. Attach a narrative explaining the construction modification, use, maintenance, and removal of the following facilities: (780.11)

   (a) Coal removal, handling, storage, cleaning and transportation structures and facilities;
   (b) Spoil, coal processing waste and non-coal waste removal, handling, storage, transportation and disposal structures and facilities;
   (c) Mine facilities; and
   (d) Water pollution control facilities.

   See Attachment III-A.-3.

4. Describe the means to be used to maximize the use and conservation coal reserves in the permit area. (780.18, 816.59) Some of the measures are:

   A) Mining the deepest seam that is economically feasible to mine.
   B) Rehandling overburden in order to maximize coal recovery that would normally be lost in the toe of the spoil.
   C) Processing and blending coal that in its "raw" condition would not have a market.

5. Describe measures to be taken to ensure that all debris, acid-forming and toxic-forming materials and materials constituting a fire hazard are disposed of in accordance with 816.89 and 816.103; include contingency plans to prevent sustained combustion of such material. (780.18)

   All acid-forming, toxic-forming, and combustible materials will be disposed of by selectively placing these materials within the mine excavations. These disposal locations will be a minimum of 10 feet vertically above the pit floor of the lowest seam to be mined and 4 feet below the final reclaimed surface of the mined area. None of this material will be placed within 100 feet of a drainage course or 30 feet of a final mining highwall. This is done to prevent the contamination of surface water and groundwater.

   After placement, these materials will be covered with a minimum of 4 feet of the best available non-acid and non-toxic forming, and non-combustible material. The surface of this cover will be crowned or sloped to prevent infiltration of surface water into the disposed material.

   All non-coal waste and debris which may be accumulated at the site (including paper and wood shipping containers, empty oil containers, worn out machine parts, etc.) will be confined in appropriate temporary containers or storage areas and periodically transported to an offsite ADEM approved landfill for permanent disposal of such materials.

Applicant: Quality Coal Co., Inc.
Mine Name: Sparks Branch Mine No. 2
Permit Number: P-

Attachment III-A-3

3.a) Crushing and screening of the coal to be mined will be performed utilizing a portable plant transported to the site by truck and erected on site. Regular maintenance will consist of routine lubrication, oil checking and changing as necessary, etc. and will be conducted during the period the crusher and/or screen is in use. When no longer needed the plant will be disassembled and transported offsite by trucks.

All haulage roads shall be designed to the following minimum criteria and/or prudent engineering practice for the design of haulroads, except where said haulroad is a public highway. See Part III-B-5 for primary and ancillary roads detailed design plans.

To the extent possible roads will be located on ridges or on the most stable available slopes to minimize erosion, downstream sedimentation and flooding in an effort to prevent adverse effects to fish, wildlife and related environmental values.

Prior to construction, the roadway areas shall be cleared, grubbed, and all topsoil shall be removed and stockpiled. Vegetation will not be cleared for more than the width necessary for the road and associated ditch construction.

Roads will be constructed by placing and compacting lifts of suitable subgrade material to a grade suitable for the intended use of the road. Drainage pipes will be placed in embankments or cuts as necessary to assure proper drainage. Once the desired grade of subgrade material has been attained and all drainage structures installed roads will be surfaced with available gravel, rock, chert or other suitable material as approved by the state regulatory agency sufficiently durable for the anticipated volume of traffic weight and speed of vehicles to be used. The surface will be compacted until a desirable grade and surface is attained. No toxic or acid forming substances will be used in this surface material. No sustained grade will exceed 10 percent unless deemed necessary, in which case appropriate sediment control facilities will be constructed. If grades of greater than 15 percent are required cross-over drains, ditch relief drains and road drainways will be located at a minimum of 300 foot intervals.

All roads will be constructed and maintained so as to have adequate drainage, using ditches, cross drains, and ditch relief drains. Drainage pipes will be placed in embankments or cuts as necessary to assure proper drainage and hay bale check dams and silt fences will be used at strategic locations when necessary to control sediment runoff. Natural drainage

ways will not be altered unless otherwise approved by the ASMC. For stability the side slopes of the road embankments and/or cuts will be seeded with temporary and perennial type grasses and mulched to aid in preventing erosion and to enhance germination of the seed. No modifications are expected and only routine maintenance will be required to maintain the surface of roads such as periodic grading and resurfacing. Spot seeded and mulching will take place as necessary to improve coverage of vegetation on side slopes and embankments. Haulroads will be maintained with water and/or other materials to minimize fugitive dust emissions. Routine maintenance will be required to assure that all roads continually meets performance standards and will consist of periodic grading, resurfacing and dust suppression. Dust suppression will consist of the application of water, chemical binders and/or other dust suppressants. No oil will be utilized in this process. Maintenance of erosion control facilities will include periodic removal of sediment from structures and repairs of areas damaged due to weather, etc. Unless retention of the roads is approved for post-mining land use the following procedures will apply. When no longer needed the roadbeds will be ripped, plowed and scarified. All road surfacing materials will be removed and placed within an open pit within the permit area. The natural drainage patterns will be restored by cutting slopes and shaping to blend with the natural drainage of surrounding areas. If necessary cross drains, dikes and water bars will be constructed to minimize erosion. Terraces will be used as necessary to provide long term stability on cut and fill slopes and to minimize erosion. Road surfaces will then be revegetated according to the reclamation plan approved for this permit application, which includes planting a mixture of up to 100 lbs. or more of various legumes and grasses.

Coal stockpiles, if determined necessary, will be located within the permitted and bonded area such that drainage from the area will be routed through one or more of the sediment basins that are to be constructed. In general an area will be graded to a relatively level state. Upon completion of the subgrade, a relatively impervious pad or liner will be constructed to a minimum thickness of 12 inches. The pad or liner will be made of a clayey material possessing a maximum permeability coefficient of 1×10^{-6} centimeters per second. The material will be placed in 6 inch compacted lifts to 95 percent of the standard proctor density. A pad will be constructed of coal material over the relatively impervious pad or liner with material created by cleaning the coal in the pit. The only modification to the stockpile areas may be to enlarge them and this operation, if necessary, will be handled in the same manner as new construction. Small terraces and/or temporary diversions will be used as necessary to minimize surface runoff across the stockpile areas. These facilities

will be maintained periodically along with the coal pad which will be maintained by grading and reshaping as necessary. After the stockpile area has served its useful purpose the pad material that can not meet market specifications will be buried within the permit area no closer than 30 feet from any remaining highwalls and 100 feet from any drainage courses and a minimum of 10 feet above the bottom of the lowest coal seam being mined and will be placed under a minimum of four feet of the best available non-acid and non-toxic forming and non-combustible material.

b) There is adequate spoil room available on site and excess spoil disposal facilities are not necessary. There will be no coal processing which generates waste so no coal waste disposal facilities are necessary. Any non-coal wastes will be disposed of within an offsite disposal area which meets all Federal, State and local laws and ordinances for permanent disposal of such materials.

c) There will be no mine facilities at this site other than a portable office which will most probably be an office trailer or a converted mobile home and will be removed from the site soon after the end of the mining process. There is a possibility that during the life of the permit an equipment maintenance shop may be constructed at this site. If this decision is made the building will be located within the permitted and bonded area. Generally these buildings are constructed of sheet metal covering a wooden frame built around poles and are erected in a manner that will facilitate disassembly and relocation to another site after equipment is removed from the area. Any modification or addition to the structure would be of similar construction. Periodic maintenance including painting and winterizing will be done either by contractors or mine personnel. After mining is completed and the equipment is removed from the site, the building will be disassembled and the various structural components will be transported via truck to another location.

d) Water pollution control facilities, sediment basins, berms, and drainage ditches shall be constructed prior to mine operation in a particular increment according to approved plans. These facilities will be used to control runoff from the mine and will be inspected and maintained until reclamation of the area is complete. Sediment basin construction and any subsequent modifications that may be required will be conducted under the general supervision of a qualified registered professional engineer and will be done in accordance with the approved design plans. The dam will be constructed of the best available soil material based on soil strength parameters and permeability. The dam core wall will bear on unyielding, relatively impermeable consolidated rock and the balance of the dam structure on the prepared compacted

natural soil material present at the site. The dam will be built in horizontal lifts beginning at the lowest point of the foundation with each lift being thoroughly compacted. The drainage structure will be installed as outlined on the detailed design plans and shall be stabilized with respect to erosion using riprap, concrete paving, energy dissipators, vegetation or otherwise. After construction of the basin, the dam and all areas disturbed by construction will be limed, fertilized, and seeded with an appropriate mixture of grasses and legumes, then mulched.

Routine maintenance of the sediment basins will consist of spot seeding, fertilization and mulching to insure that a good vegetative cover is maintained on the dam and areas around the pond, repair and stabilization of any rills and gullies which may develop, repairs to discharge structures and erosion protection structures as required, and removal of entrapped sediment from the basins prior to its reaching the maximum level indicated on the approved plans. All sediment basins will be inspected quarterly by the operator's personnel and annually by a registered professional engineer and any required maintenance will be completed at the earliest possible time by the operator.

All basins are proposed, no modification plans are required. If during the term of the permit basins require modifications, modification plans will be submitted to the Regulatory Authority for approval prior to any modifications. Upon modifying the basin, the basin will be certified to the Regulatory Authority.

Upon completion of mining, successful reclamation and effluent standards being met, each sediment basin not remaining as a permanent water impoundment will be dewatered in an environmentally safe manner (such as siphoning, pumping, etc.) and reclaimed to approximate original contours by the following procedure:

A permanent diversion channel (designed for a 10 yr. -24 hr. precipitation event) shall be cut along the outer edge of the basin to re-route drainage around the basin and back through the stabilized spillway to allow for the reclamation of the sediment basin. The diversion channel shall be designed and grassed as per enclosed information. (See permanent diversion channel for basin disposal) Upon completion of the diversion channel the embankment will be breached to the existing sediment level to prevent the impoundment of water. The breach will be graded to a minimum side slope of 2.5 to 1 and revegetated and/or riprapped as to prevent erosion and ensure the stability of the exposed breach. The remaining back slope of the embankment will be graded to a minimum 3 to 1 slope. The dewatered sediment basin will be seeded with some

combination of the following: Fescue, bermuda, rye grass, canary grass, and willows. After seeding the area will be mulched. Any additional sediment or embankment material not used to meet approximate original contour, if nontoxic, will be spread in thin layers within the permit area and vegetated as stated in the reclamation plan. All toxic material encountered in the basin disposal will be buried and covered with 4 feet of nontoxic and noncombustible material and vegetated a stated in the reclamation plan.

Applicant: Quality Coal Co., Inc.
Mine Name: Sparks Branch Mine No. 2
Permit Number: P-

6. Give a description, including appropriate cross-sections and maps, of measures to be used to seal or manage mine openings, bore holes, wells and other openings within the proposed permit area. (780.18, 816.13-816.15)

The abandoned 'punch' mines will be sealed if mining progression does not completely mine through the 'punch' mines. Mine openings created by mining on this permit will be sealed after mining is completed by constructing a clay barrier as shown on Attachment III-A-6 with a permeability no greater than 1 X 10^{-6} cm/sec. The material will be placed in horizontal lifts not to exceed 6 inches and compacted to 95% of the standard proctor. If the opening is a wet opening, 6 inch diameter pipes will be inserted into the opening and covered with approximately 12 inches of soil along the outside of the opening. This covering of the pipes is to prevent cushing the pipes by equipment during the sealing operations. Upon the installation of the pipes, class 3 sandstone or limestone riprap will be inserted into the opening using mobile equipment to push the stone into the opening as far as the material can be pushed. Class 2 and Class 1 riprap and soil material will follow the Class 3 riprap until the opening is sealed approximately 3 feet from the entrance of the opening. All material will be compacted using mobile equipment or handtamps. The remaining face-up highwall will be backfilled at this point. During this construction period, the 6 inch diameter pipes will be draining any accumulating water behind the seals within the openings. Upon the completion of the sealing operations, the pipes will be plugged with a device such as a gate valve. All disturbed areas will be fertilized, seeded and mulched as entailed in the reclamation plan. If the opening is a dry opening, class 3 sandstone or limestone riprap will be inserted into the opening using mobile equipment to push the stone into the opening as far as the material can be pushed. Class 2 and Class 1 riprap and soil material will follow the Class 3 riprap until the opening is sealed approximately 3 feet from the entrance of the opening. All material will be compacted using mobile equipment or handtamps. At this time a 12 inch thick clay barrier will be constructed within the opening. This is done in an effort to ensure a water tight seal of the wall. Upon the completion of the wall, soil material will be used to backfill the opening to a minimum of 5 feet above the opening, and compacted using mobile equipment or handtamps on a slope of 2:1 or flatter. The remaining face-up highwall will be backfilled at this point. All disturbed areas will be fertilized, seeded and mulched as entailed in the reclamation plan.

Bore holes and wells will be backfilled with cuttings from the holes and capped with clay or other impervious material. Abandoned monitoring wells will be sealed with a concrete cap

which is approximately 2'x 2'x 0.5'. See Attachment III-A-6 for typical illustration of methods to be used to seal and/or manage bore holes and wells.

Any abandoned plugged and unplugged gas and oil wells found during mining of the old works will be sealed as outlined by the Alabama Oil and Gas Board after all coal is removed from the vicinity of the well.

Plugged and abandoned wells will be squared up and a device will be used to detect the presence of gas. If gas is present, the area of flow will be sealed by placing concrete/grout or sacrete to a depth of 25 feet and a 3/8 inch steel plate welded across all casing stubs. If gas is not present, a 3/8" inch steel plate will be welded across all casing stubs. A written report of the resealing process used on each plugged and abandoned well will be submitted to the ASMC and Alabama Oil and Gas Board within 30 days.

Unplugged wells will be temporarily sealed and restored by the following process: the owner of the well will submit a temporary abandonment and restoration plan to the Alabama Oil and Gas Board for approval. The well will be sealed for temporary abandonment prior to mining through and restored in accordance with the approved plan to the Alabama Oil and Gas Board.

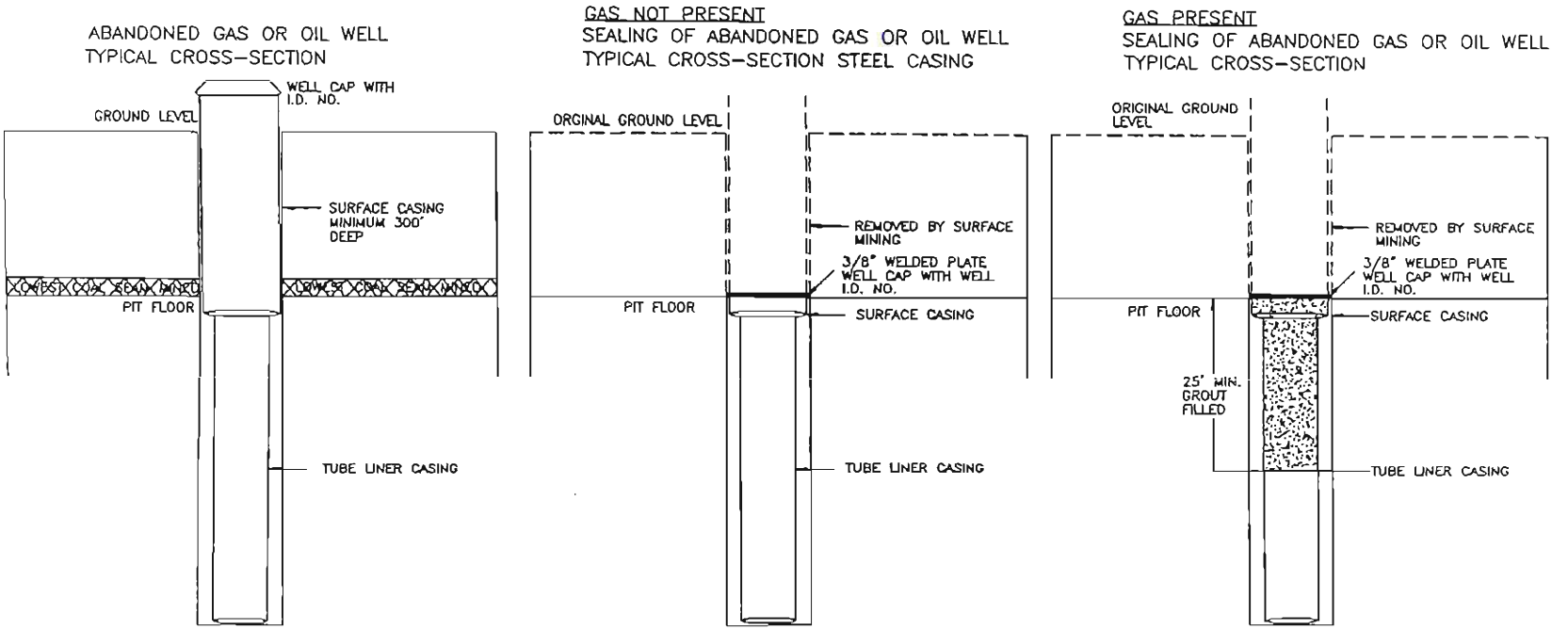

PERC ENGINEERING CO., INC.

ATTACHMENT III-A-6
TYPICAL PLUGGING PROCEDURE FOR GAS OR OIL WELL ENCONTURED IN MINING PROCESS

DRAWN BY: K.E.P. DWG. NAME: TYPPLUGG	DATE: 11/13/2008
APPROVED BY: S.D.M.	SCALE: NO SCALE

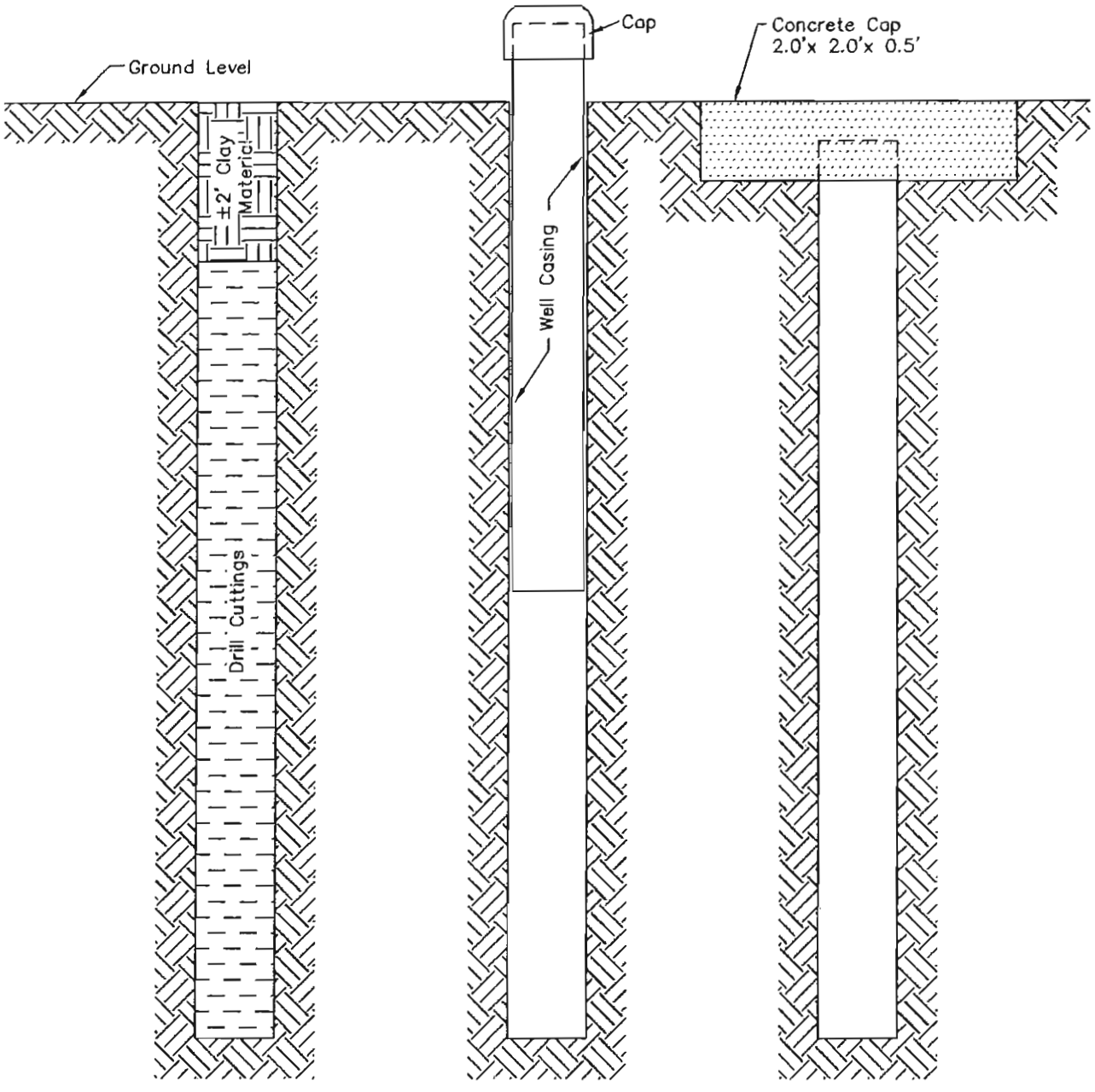

EXPLORATION HOLE

ACTIVE MONITORING WELL

ABANDONED MONITORING WELL

ATTACHMENT III–A–6

PERC
ENGINEERING CO., INC.

MONITORING WELL AND EXPLORATION HOLE MAINTENANCE AND SEALING DETAILS

DRAWN BY: R.E.P.	DATE: 6–28–89
APPROVED BY:	SCALE: NONE

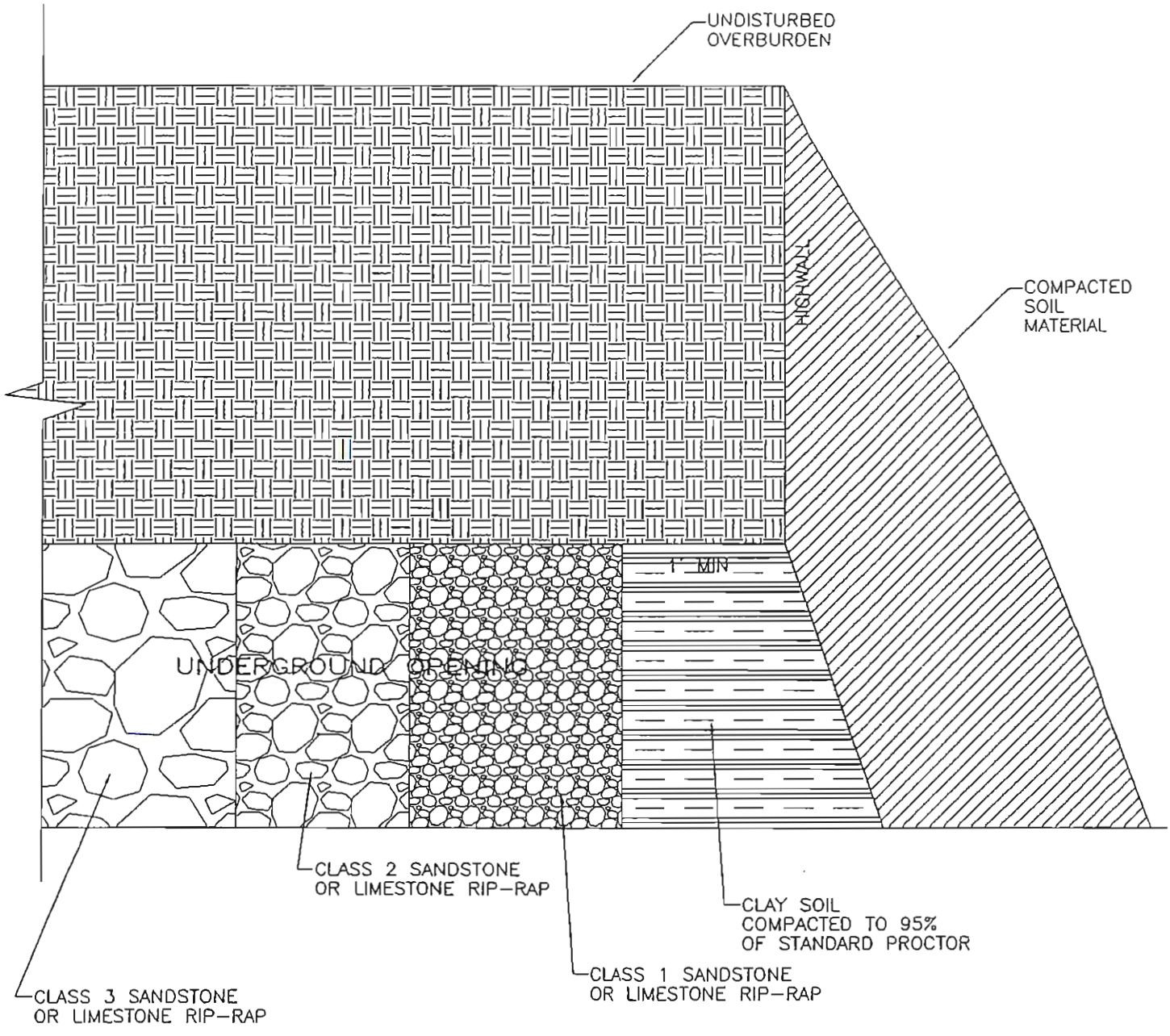

ATTACHMENT III. – A. – 6.

See response to III. – A. – 6 for sealing details.

PERC ENGINEERING CO., INC.

Typical Cross Section of Underground Workings Seal Dry Conditions

DRAWN BY: K.E.P. DWG. NAME: MRLLCUWS	DATE: 12-6-07
APPROVED BY: W.K.M.	SCALE: NONE

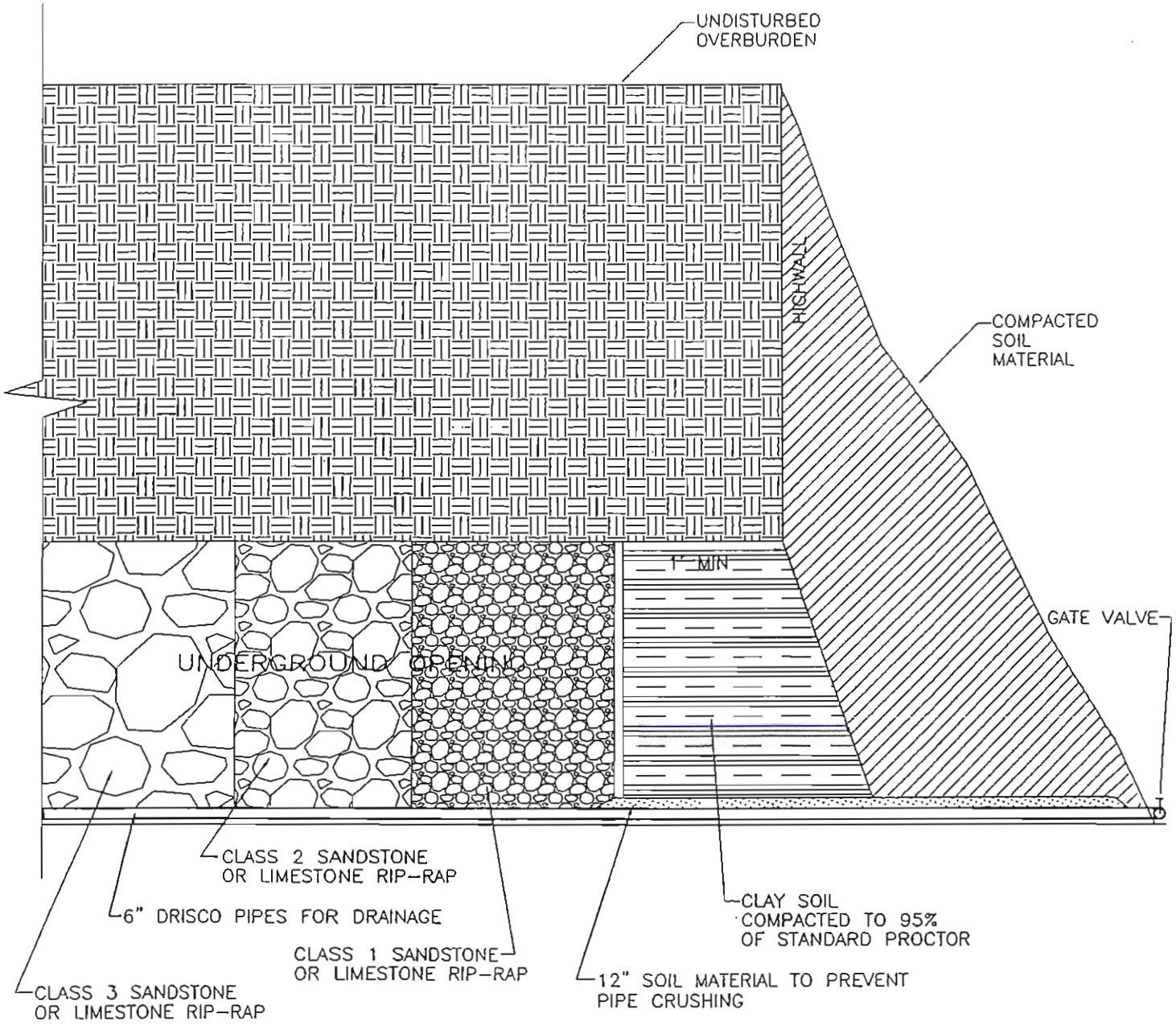

ATTACHMENT III. – A. – 6.

See response to III. – A. – 6 for sealing details.

PERC ENGINEERING CO., INC.

Typical Cross Section of Underground Workings Seal Wet Conditions

DRAWN BY: K.E.P. DWG. NAME: MRLLCWSW	DATE: 12-06-07
APPROVED BY: W.K.M.	SCALE: NONE

Applicant: Quality Coal Co., Inc.
Mine Name: Sparks Branch Mine No. 2
Permit Number: P-

7. Give a description of steps to be taken to comply with applicable water quality laws, regulations and health and safety standards. (780.18)

Surface runoff will be routed through sediment control basins prior to being discharged from the permit area. Discharges from sediment basins will be monitored by in-house personnel or consultants, at the discretion of the permittee, as necessary to assure compliance with applicable State and Federal Laws and Regulations. Chemical treatment with aqueous sodium hydroxide solution will be used on water entering the drainage course of the existing basins if this is determined necessary to achieve compliance with State and Federal Laws. On occasion, a solution of chemically hydrated lime and water will be used in sediment basins for immediate correction of pH imbalances. With proper pH, the heavy metals will precipitate to the bottom of the basins and will not exit the discharge pipe or spillway. Alum may be used on occasion if necessary to facilitate flocculation and precipitation of suspended solids. A permit to discharge under the National Pollutant Discharge Elimination System has been applied for and discharges from the proposed basins will be monitored and results of that monitoring, both compliant and non-compliant, will be reported in accordance with the NPDES Permit and the hydrologic monitoring plan shown elsewhere in this permit application. A trained and qualified health and safety staff will be contracted to assure that all health and safety standards and MSHA regulations are complied with. Certification and training of all mine personnel will be current and will be updated as necessary by attending MSHA classes taught by certified personnel. All dust, noise and other required control tests will be current and will be performed as necessary by certified MSHA personnel. Records of all testing required will be kept at the mine and will be available for inspection by the Regulatory Authority. All necessary permits for field absorption systems for the office and similar facilities will be obtained prior to construction of these facilities. Haul roads will be maintained with water and/or other materials to minimize fugitive dust emissions.

Applicant: Quality Coal Co., Inc.
Mine Name: Sparks Branch Mine No. 2
Permit Number: P-

8. Is surface mining to be conducted within 500 feet of an underground mine? (780.27, 816.79) (XXX) Yes ( ) No

If yes, describe measures to be used to comply with Section 816.79. Attach a map showing the location and extent of known workings in accordance with 780.14(a)(13). Attach a copy of MSHA approval.

As shown by Attachment III-A-8, the permit area is within the abandoned works of the of the Hillard Coal Co., Punch Mine in the Mary Lee Coal Seam. By allowing the mining of coal within and adjacent to the abandoned underground mines, coal reserves will be recovered that would otherwise be lost, the potential of water pollution caused by the underground workings will be eliminated, and public safety hazards from subsidence and entrapment within the mine openings will be eliminated.

In numerous previous permit applications submitted to ASMC, the Mine Safety and Health Administration (MSHA) has been consulted concerning conducting surface mining within 500 feet of an abandoned or inactive underground mine. MSHA’s response has always been, if the underground mine is abandoned or inactive with no works in the mine, MSHA has no interest, concern, or jurisdiction.

U.S. Department of Labor

Mine Safety and Health Administration
135 Gemini Circle, Suite 213
Birmingham, AL 35209

MAY 24 2010

Stephen Miles, E. I.
PERC Engineering Co., Inc.
P.O. Box 1712
Jasper, AL 35502

Re: Quality Coal Co., Inc.
Sparks Branch Mine No. 2

Dear Mr. Miles:

This **acknowledges** your letter, dated May 18, 2010, for Quality Coal Co. Inc., Sparks Branch Mine No. 2, to mine through the Hillard Coal Co. Punch Mine in the Mary Lee seam.

If you have any questions concerning this matter, please contact the District Plans Group at (205) 290-7302, Ext. 276.

Sincerely,

Joseph R Dallas

For Richard A. Gates
District Manager

PERC
ENGINEERING CO., INC.

Telephone: (205) 384-5553
Facsimile: (205) 295-3114 - Main Building
(205) 295-3115 - Water Lab
Web Address: www.percengineering.com

May 18, 2010

MINE SAFETY & HEALTH ADMINISTRATION
RECEIVED
MAY 19 2010
DISTRICT II
BIRMINGHAM, ALABAMA

Mr. John Smoot
Mine Safety & Health Administration
135 Gemini Circle, Suite 213
Birmingham, Alabama 35209

RE: Quality Coal Co., Inc.
Sparks Branch Mine No. 2

Dear Mr. Smoot:

Quality Coal Co., Inc. is proposing to mine within the extents of the abandoned underground works of the Hillard Coal Co., Punch Mine in the Mary Lee Coal Seam located in Sections 15 and 22, Township 14 South, Range 8 West, Walker County, Alabama, west of the City of Jasper in the McCollum community. As per the rules and regulations of the Alabama Surface Mining Commission, we are required to receive approval from MSHA to mine into the old abandoned works. Please respond with a letter that MSHA has no objection with the proposed activity. Your prompt consideration will be most appreciated.

If you require additional information, please feel free to call at (205) 295-3131 or email at smiles@percengineering.com.

Sincerely,
PERC Engineering Co., Inc.

Stephen Miles, E.I.

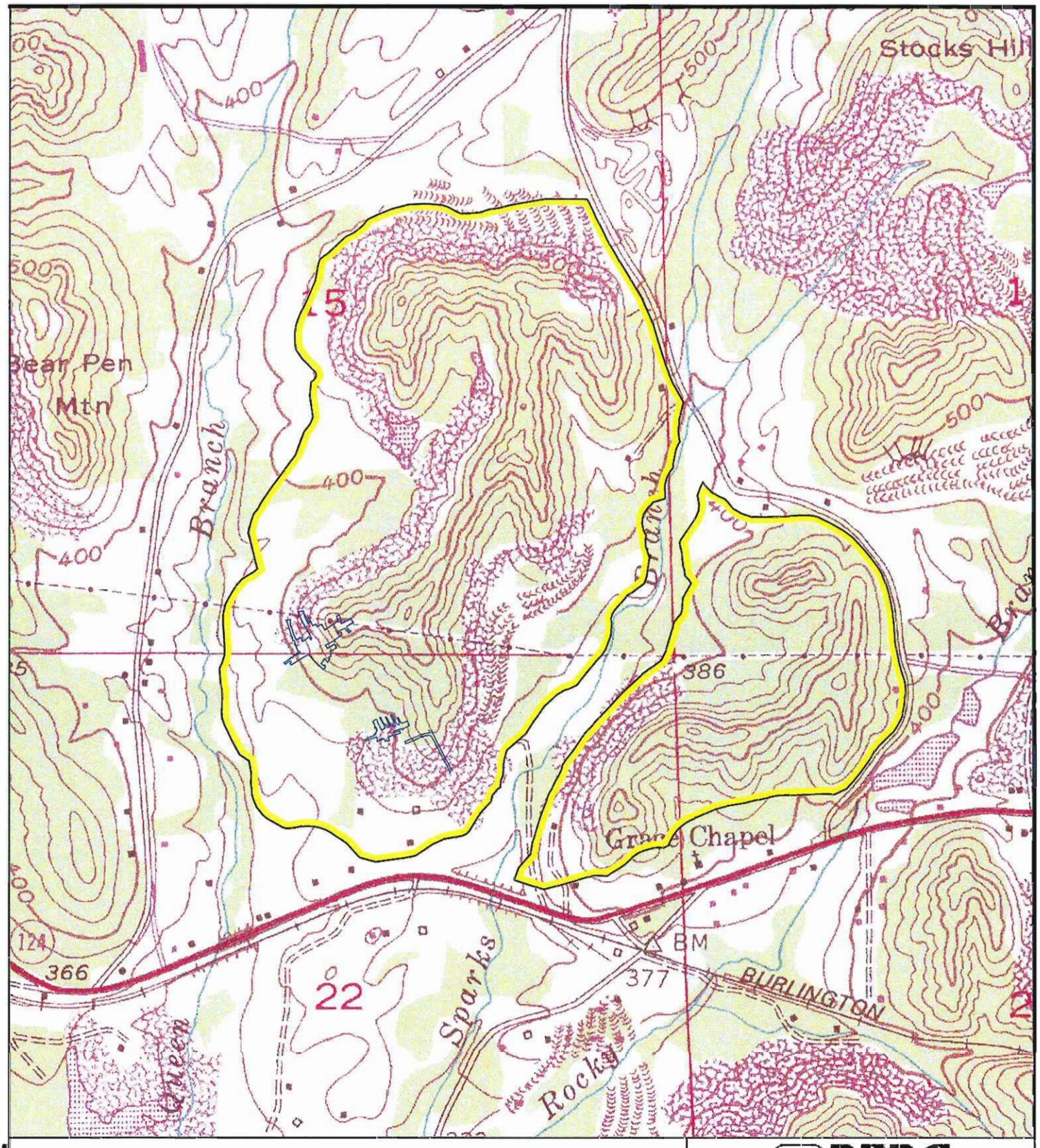

MAP LEGEND

Proposed Permit Area

Abandoned Punch Mine- Mary Lee Coal Seam
Hillard Coal Co.

Base map taken from the Jasper, Alabama USGS Quadrangle.

PERC ENGINEERING CO., INC.

Attachment III-A-8
Quality Coal Co., Inc.
Sparks Branch Mine No. 2
P-

DRAWN BY:	S.D.M.	DATE:	5/14/2010
DWG. NAME:	QCSB2UG		
APPROVED BY:	L.G.S.	SCALE:	1"=1000'

Applicant: Quality Coal Co., Inc.
Mine Name: Sparks Branch Mine No. 2
Permit Number: P-

B. Engineering Plans

All cross-sections, maps and plans related to operations, reclamation and structures must comply with Section 780.10. Plans, appropriate calculations and conclusions shall be presented in a clear and logical sequence and shall take into account all applicable factors necessary to evaluate the proposed plan or design.

1. Existing Structures. (780.12, 786.21)

(a) Describe each existing structure to be used, its location, current condition, approximate dates of construction and evidence (including relevant monitoring data) showing whether or not the structure meets the performance standards of Subchapter K or Subchapter B, whichever is more stringent and demonstrate whether or not the use of existing structures will pose a significant harm to the environment or public health or safety.

Not applicable

(b) If an existing structure requires modification or reconstruction to meet the performance standards, attach a compliance plan which includes design specifications, construction schedule, monitoring procedures, and evidence that the risk of harm to the environment or public health or safety is not significant during modification or reconstruction.

Applicant: Quality Coal Co., Inc.
Mine Name: Sparks Branch Mine No. 2
Permit Number: P-

2. Ponds, impoundments, banks, dams and embankments. (780.25)

(a) Submit a general plan which complies with Section 780.25(a)(1) for each proposed sedimentation pond, water impoundment, and coal processing waste bank, dam or embankment to be located within the proposed permit area.
See attachment III-B.-2.A

(b) Submit detailed design plans which comply with Sections 780.25(a)(2 and 3) and 816.46 for each sedimentation pond to be constructed on the increment you currently propose to mine. If the sediment pond is to remain as a permanent water impoundment, design plans shall also comply with Section 816.49.
See attachment III-B.-2.A

(c) Submit detailed design plans which comply with Sections 780.25(a)(2 and 3) and 816.49 for each temporary or permanent water impoundment to be constructed on the increment you currently propose to mine.
See attachment III-B.-2.A

(d) Submit detailed design plans which comply with Sections 780.25(a) (2 and 3) and 816.81-816.85 for each coal processing waste bank to be constructed on the increment you currently propose to mine.
None proposed.

(e) Submit detailed design plans which comply with Sections 780.25(a)(2 and 3) and 816.91-816.93 for each coal processing waste dam and embankment to be constructed on the increment which you currently propose to mine.
None proposed.

3. Diversions. (780.29,816.43, 816.44)

Are diversions of overland flow or stream channel diversions proposed?
(XXX) Yes ( ) No

If yes, complete the following:

(a) Is the diversion to be permanent?
( ) Yes (XXX) No

Applicant: Quality Coal Co., Inc.
Mine Name: Sparks Branch Mine No. 2
Permit Number: P-

CERTIFICATION STATEMENT:

I hereby certify that Attachment III-B.-2.A prepared for Quality Coal Co., Inc.'s, Sparks Branch Mine No. 2, are in accordance with the Regulations of the Alabama Surface Mining Commission as adopted by Act 81-435 of December 18, 1981 and amended to date, and are true and correct to the best of my knowledge and belief.

_____ _____

Leslie G. Stephens, P.E., P.L.S. Date
AL Registration #14117-E

Applicant: Quality Coal Co., Inc.
Mine Name: Sparks Branch Mine No. 2
Permit Number: P-

GENERAL PLAN

The general plan consists of constructing nine (9) proposed sediment basins, Sediment Basins 004P, 005P, 009P, 010P, 011P, 012P, 013P, 024P and 025P for the life of the mine. Detailed design plans for Sediment Basins 005P and 009P will be submitted to the Regulatory Authority and upon written approval the sediment basins will be constructed and certified to the Regulatory Authority prior to disturbance within their respective drainage areas. General design data is enclosed. All basins are to remain as permanent water impoundments, fish and wildlife habitat. Data to qualify the sediment basins as permanent water impoundments will be submitted to the Regulatory Authority prior to Phase II Bond Release.

Due to Basins 012P and 013P being constructed in spoil material, the interior of the basins will be lined with 1.0 feet (minimum) of clay material with a permeability no greater the 1×10^{-6} cm/sec up to the emergency spillway elevation to minimize infiltration and to provide a stable pool level. The material will be placed in horizontal lifts not to exceed 6 inches and compacted to 95% of the standard proctor. (See attached data and watershed map for basin location and preliminary hydrologic information).

Geologic investigations of the area indicate layers of sandstone, siltstone, shale and minor amounts of bituminous coal and underclay. The coal to be mined by Quality Coal Co., Inc., will be confined to the New Castle, Mary Lee, and Blue Creek Coal Seams. The strata in the area is characterized by small scale normal faulting and gentle open folding.

All surface drainage from the proposed mining area flows into Sparks Branch, Queen Branch, and Rocky Branch.

All diversions are to be temporary and will be re-graded and revegetated. (See diversion ditch criteria).

One underground mine exists within 500' of the permit boundary. As shown by Attachment III-A-8, the permit area is within the abandoned works of the of the Hillard Coal Co., Punch Mine in the Mary Lee Coal Seam, which covers a small area south of Basin 005P and northeast of Basin 004P. A portion of this mine has bee eliminated by previous surface mining.

Applicant: Quality Coal Co., Inc.
Mine Name: Sparks Branch Mine No. 2
Permit Number: P-3947

Attachment III-B-2-A

Basin No.	Location	Drainage Area (Acres)
004P	NE 1/4 of NW 1/4, Section 22	67.0
005P	SE 1/4 of SW 1/4, Section 15	115.0
009P	SE 1/4 of SE 1/4, Section 15	54.0
010P	NE 1/4 of NE 1/4, Section 22	46.0
011P	SE 1/4 of NE 1/4, Section 22	22.0
012P	NW 1/4 of NW 1/4, Section 23	15.0
013P	NW 1/4 of NW 1/4, Section 23	19.0
024P	SW 1/4 of SW 1/4, Section 14	21.0
025P	SE 1/4 of SE 1/4, Section 15 SW 1/4 of SW 1/4, Section 14	32.0

All located within Township 14 South, Range 8 West, Walker County, Alabama, as found on the Jasper and Townley, Alabama USGS Quadrangle Maps.

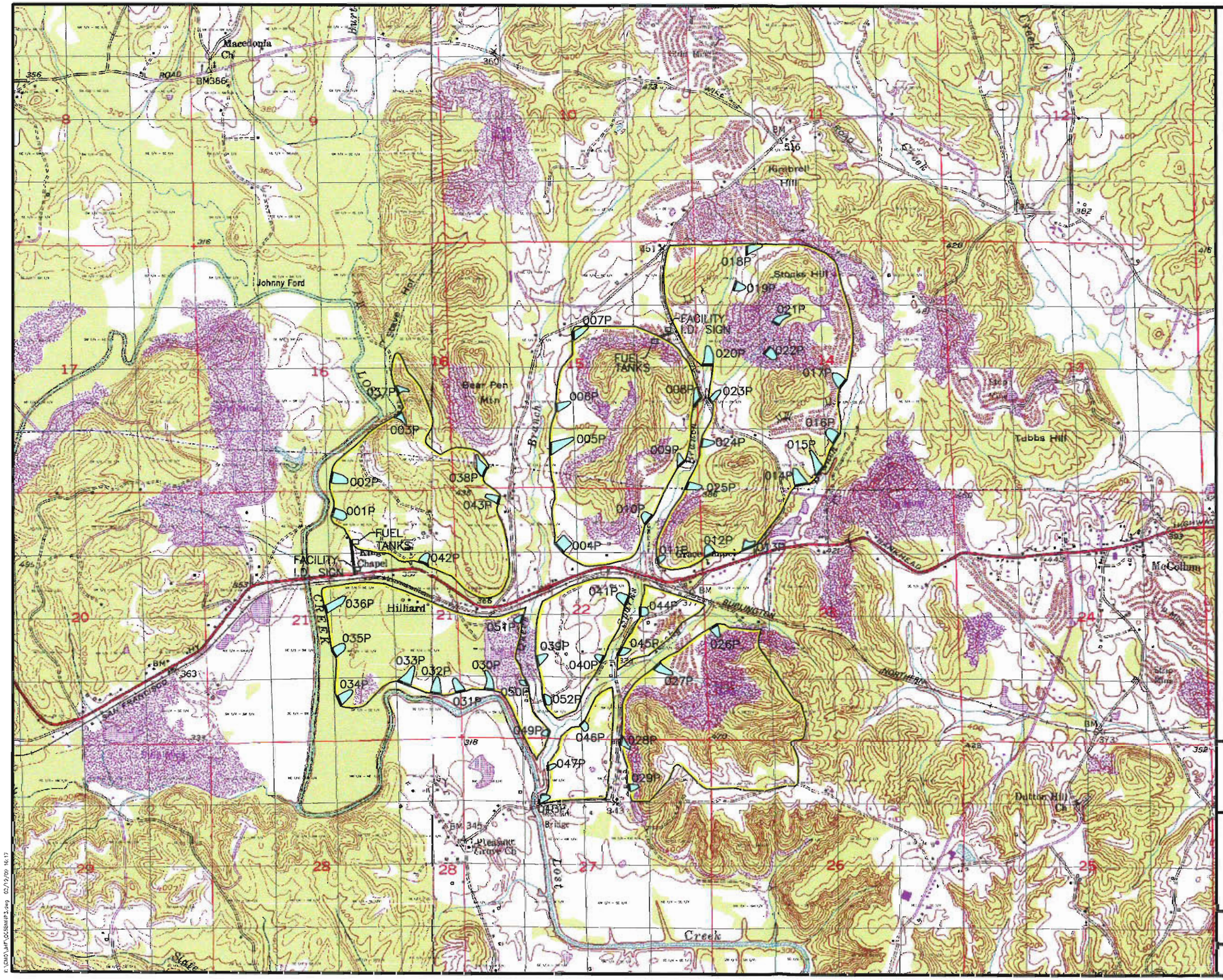

Scale 1" = 2000'

N

LEGEND

- Permit Boundary/Increment Boundary
- 600 Surface Contour
- 001P Sediment Basin
- Property Line other than Forty Line
- Diversion Ditch/Berm
- Occupied Dwelling
- Unoccupied Dwelling (Barn, Shed, ect.)
- Haulroad
- Ancillary Road
- County Road (Paved unless otherwise designated)
- Road (Private unless otherwise shown)
- Existing Highwall
- Previously Disturbed

PERMIT NUMBER: AL0077801
ISSUANCE DATE: 9/28/2007
EFFECTIVE DATE: 10/1/2007
EXPIRATION DATE: 9/30/2012

PERC ENGINEERING CO., INC.
1606 Highway 78 West Jasper, Alabama 35501
P.O. Box 1712 Jasper, Alabama 35502
(205) 387-5531 Office (205) 795-3114 Fax

NPDES PERMIT MAP
QUALITY COAL COMPANY, INC.
SPARKS BRANCH MINE
PART OF SECTIONS 14, 15, 16, 21, 22
23, 26 & 27 TOWNSHIP 14 SOUTH, RANGE 8
WEST WALKER COUNTY, ALABAMA

DRAWN BY: C.M.O. DWG. NAME: QCSBMNP3	DATE: 2/19/09
APPROVED BY: J.H.F.	SCALE: 1"=2000'

F:\CMO\MP\QCSBMNP3.dwg 02/19/09 16:17

PERC ENGINEERING CO., INC.

Telephone: (205) 384-5552
Facsimile: (205) 295-3114 - Main Building
(205) 295-3115 - Water Lab
Web Address: www.percengineering.com

May 10, 2010

Mr. Jarret Goddard
Alabama Department of Environmental Management
1400 Coliseum Boulevard
Montgomery, Alabama 36110-2059

RE: Quality Coal, Inc.
Sparks Branch Mine
NPDES Permit AL0078972

Dear Jarret:

Quality Coal, Inc. to relocate outfall 011P downstream 300 feet, relocate outfall 012P upstream 195 feet, and relocate outfall 013P upstream 215 feet. The following information relates outfalls 011P, 012P, and 013P to the current location and proposed relocated location:

	Current Location Outfall 011P	Relocated Location Outfall 011P
Latitude	33° 49' 00"	33° 48' 59"
Longitude	87° 21' 33"	87° 21' 37"
Drainage Area	12.0 Acres	13.0 Acres

	Current Location Outfall 012P	Relocated Location Outfall 012P
Latitude	33° 49' 01"	33° 49' 03"
Longitude	87° 21' 19"	87° 21' 20"
Drainage Area	16.0 Acres	13.0 Acres

	Current Location Outfall 013P	Relocated Location Outfall 013P
Latitude	33° 49' 02"	33° 49' 04"
Longitude	87° 21' 10"	87° 21' 11"
Drainage Area	23.0 Acres	19.0 Acres

PERC
ENGINEERING CO., INC.

Telephone: (205) 384-5553
Facsimile: (205) 295-3114 - Main Building
(205) 295-3115 - Water Lab
Web Address: www.perceng inearing.com

If you have any questions or required additional information, please feel free to call me at 205-295-3133.

Sincerely,

PERC Engineering Co., Inc.

John Taylor

John Taylor

Engineer

P.O. Box 1712 • Jasper, Alabama 35502 • 1606 Highway 78 West • Jasper, Alabama 35501

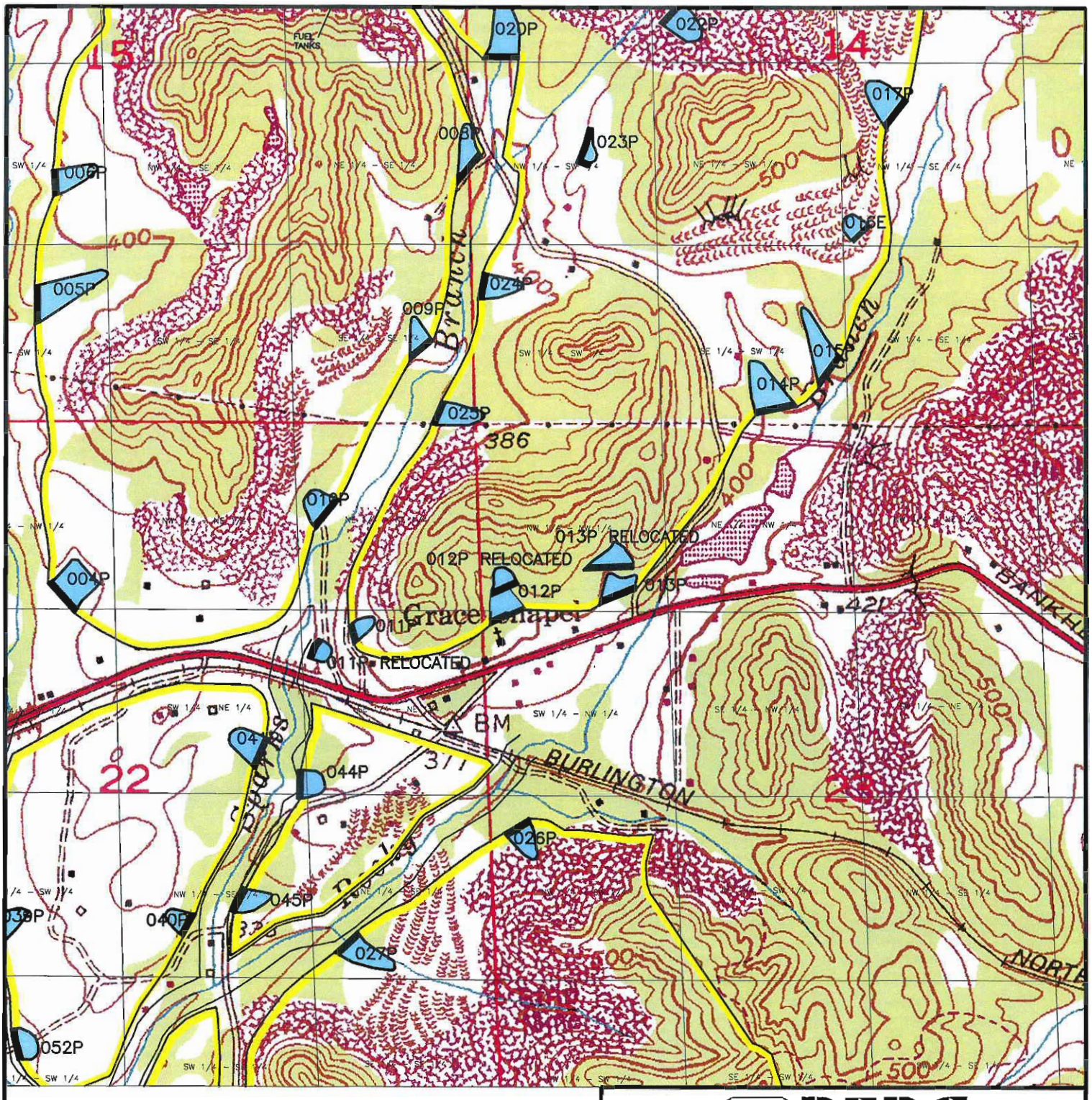

LEGEND

PERMIT BOUNDARY

001P SEDIMENT BASIN

PERMIT NUMBER: AL0077801
ISSUANCE DATE: 9/28/2007
EFFECTIVE DATE: 10/1/2007
EXPIRATION DATE: 9/30/2012

BASE MAP TAKEN FROM THE TOWNLEY & JASPER, ALABAMA U.S.G.S. QUADRANGLES.

Scale: 1" = 1000'

N

PERC ENGINEERING CO., INC.

NPDES Permit Map
Quality Coal, Inc.
Sparks Branch Mine
NPDES Permit AL0078972

DRAWN BY:	J.W.T.	DATE:	05/10/2010
DWG. NAME:	QCSBMNPDES2		
APPROVED BY:	S.D.M.	SCALE:	1"=1000'

Y:\KCH\JAF\QCSBMNPDES2.dwg 05/10/10 08:49

Applicant: Quality Coal Co., Inc.
Mine Name: Sparks Branch Mine No. 2
Permit Number: P-

Attachment III-B-2-A

Pond Construction Criteria

The embankment for sediment basins (temporary and permanent) shall be designed and built using the following as minimum criteria:

1. The top of the dam shall be no less than 12 feet wide.

2. See design sheet for maximum and minimum embankment slopes.

3. The foundation and abutments for the impounding structure shall be designed to be stable under all conditions of construction and operation of the impoundments, with a minimum static safety factor of 1.5 for the normal pool with steady seepage saturation conditions, and a seismic safety factor of at least 1.20.

4. The dam shall be constructed with a cutoff trench based upon prudent engineering practices for the site. The cutoff shall be located on the dam centerline and be of sufficient depth to extend into a relatively impervious material from which the core of the dam shall also be constructed.

5. The embankment foundation area shall be cleared of all organic matter, all surfaces sloped to no steeper than lv:lh, and the entire foundation surface scarified.

6. The entire embankment and cutoff trench shall be compacted to 95 percent density, based on standard proctor as outlined in ASTM.

7. The material placed in the embankment shall be free of sod, roots, stones over 6 inches in diameter, and other objectionable materials. The fill material shall be placed and spread over the entire fill area, starting at the lowest point of the foundation, in layers not to exceed 12 inches in thickness. Construction of the fill shall be undertaken only at such times that the moisture content of the fill material will permit satisfactory compaction in accordance with paragraph 5.

8. The pool area of the basin will be cleared of timber and large undergrowth.

9. The primary decant system when consisting of a pipe shall be installed according to Class C pipe installation for embankment bedding.

10. The primary decant system shall be equipped with a device, or constructed, such as to insure that subsurface withdrawal is accomplished to prevent discharge of floating solids. If a channel is used as the primary decant a skimmer shall be installed to prevent floating solids from discharging.

11. A splash pad or riprap may be required under the discharge of the primary decant system where necessary to insure that the discharge

does not erode the embankment.

12. The combination primary and secondary decant system shall be designed to safely carry the expected peak flow from a 25 year - 6 hour storm. The entire emergency overflow spillway channel will be a stabilized channel and will be stabilized upon completion of construction as specified within the detailed design plans using prudent engineering measures. These measures may consist of lining the spillway with concrete or a durable rock riprap, or the spillway being constructed in consolidated non-erodible material and planted with a mixture or both annual and perennial grasses, or a combination of any or all of the above.

13. Sediment basins using a single spillway system shall be an open channel of non-erodible construction consisting of concrete, durable rock riprap or its being constructed in consolidated non-erodible material as specified in the detailed design plans.

14. The settled embankment for temporary impoundments shall be a minimum of 1.0 foot above the maximum water elevation for the runoff from a 25 year - 6 hour, or a 10 year - 24 hour precipitation event (whichever has the greatest runoff). The settled embankment for permanent impoundments shall be a minimum of 1.0 foot above the maximum water elevation for the runoff from a 25 year - 6 hour, or a 10 year - 24 hour precipitation event (whichever has the greatest runoff).

15. If basins are built in series, then the combined decant system for each shall be designed to accommodate the entire contributing drainage area.

16. The dam and all disturbed areas shall be seeded with both perennial and annual grasses, fertilized and mulched in order to insure erosion is minimized. Hay bales or riprap may be placed at the toe of the dam immediately upon completion of construction.

17. The constructed height of the dam shall be increased a minimum of 5 percent over the design height to allow for settlement over the life of the embankment.

18. Final graded slopes of the entire permanent water impoundment area shall not exceed 2.5H-1.0V to provide for adequate safety and access for proposed water users.

19. Prior to Phase II bond release, additional data concerning water quality, water quantity, depth, size, configuration, postmining land use, etc., for each proposed permanent water impoundment, shall be submitted to the Regulatory Authority for permanent water impoundment approval.

20. All sediment basins will be inspected for stability, erosion, etc. two (2) times a month until removal of the structure or release of the reclamation bond.

Applicant: Quality Coal Co., Inc.
Mine Name: Sparks Branch Mine No. 2
Permit Number: P-

21. The embankment and spillway will be maintained by repairing any damage such as erosion, slope failure or spillway damage until removal of the structure or release of the performance bond.

22. All ponds shall be examined quarterly for structural weakness, instability, erosion, or other hazardous conditions and maintenance performed as necessary. Formal inspections shall be made on an annual basis, including any reports or modifications, in accordance with 880-X-10C-.20[l(j)] of the Alabama Surface Mining Commission Regulations.

23. Sediment will be removed from each pond when the accumulated sediment reaches the sediment storage volume as shown on the detailed design sheet.

24. Upon completion of mining, successful reclamation and effluent standards being met, each sediment basin not remaining as a permanent water impoundment will be dewatered in an environmentally safe manner (such as siphoning, pumping, etc.) and reclaimed to approximate original contours by the following procedure: A permanent diversion channel (designed for a 10 year - 24 hour precipitation event) shall be cut along the outer edge of the basin to re-route drainage around the basin and back through the stabilized spillway to allow reclamation of the sediment basin. The diversion channel shall be designed and grassed as per enclosed information. (See permanent diversion for basin disposal).Upon completion of the diversion channel the back slope of the dam shall be graded to a minimum 3H to 1V slope. The dewatered sediment basin area shall be seeded with some combination of the following: Fescue, bermuda, rye grass, canary grass and willows. After seeding the area shall be mulched. Any additional sediment or embankment material not used to meet original contour, if non-toxic, shall be spread in thin layers within the permit area and vegetated as stated in the approved reclamation plan. All toxic material encountered in the basin disposal shall be buried and covered with 4 feet of non-toxic material and vegetated as stated in the approved reclamation plan.

25. A qualified registered professional engineer or other qualified professional specialist, under the direction of the professional engineer shall conduct regular inspections during construction and upon completion shall inspect each basin for certification purposes.

26. Point source discharge embankments shall be constructed and abutments keyed into desirable material if at all possible. In the event that undesirable material is encountered, addition design and construction criteria shall be submitted prior to certification.

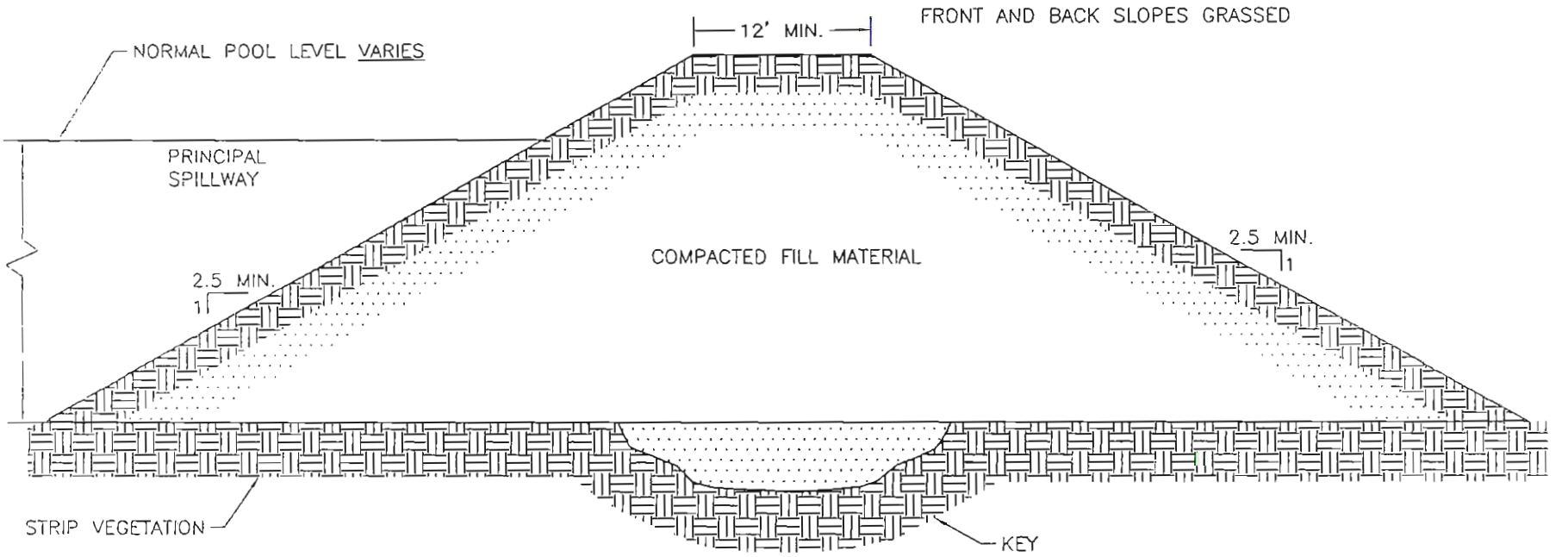

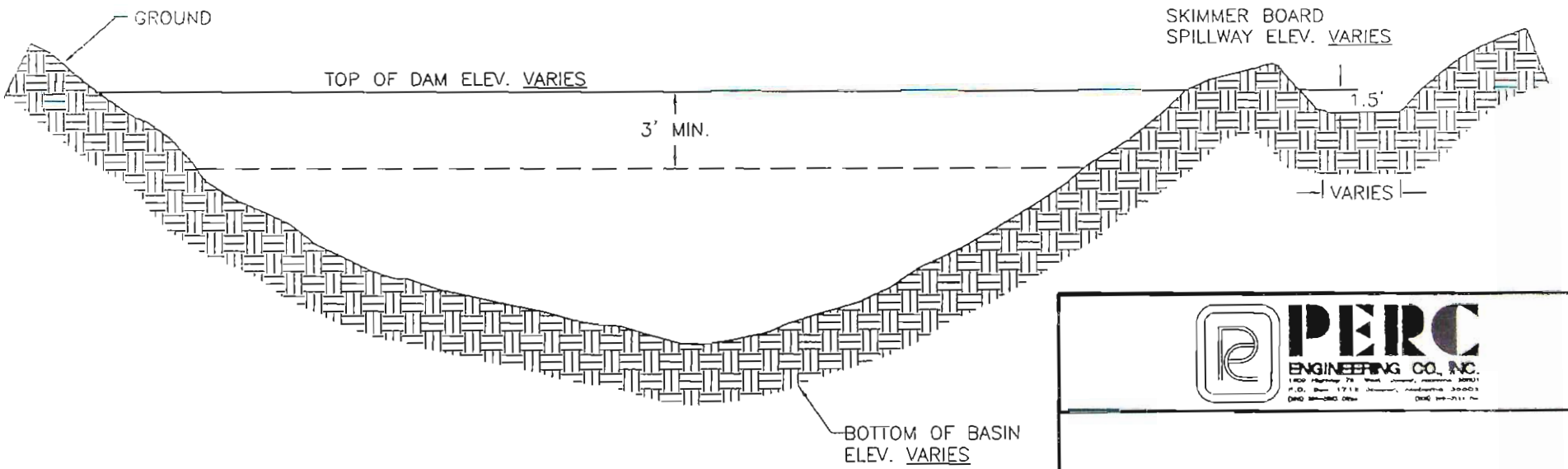

TYPICAL DAM DETAIL
NO SCALE

PERC ENGINEERING CO., INC.

TYPICAL DAM DETAIL

DRAWN BY:	J.W.T.	DATE:	04-16-2009
DWG. NAME:	TYPICALS		
APPROVED BY:	L.G.S.	SCALE:	NONE

ATTACHMENT III-B-2-A

Y:\Eng105\Typicals\III-B-2(c)\Attachment III-B-2(a).dwg 04/10/09 11:15

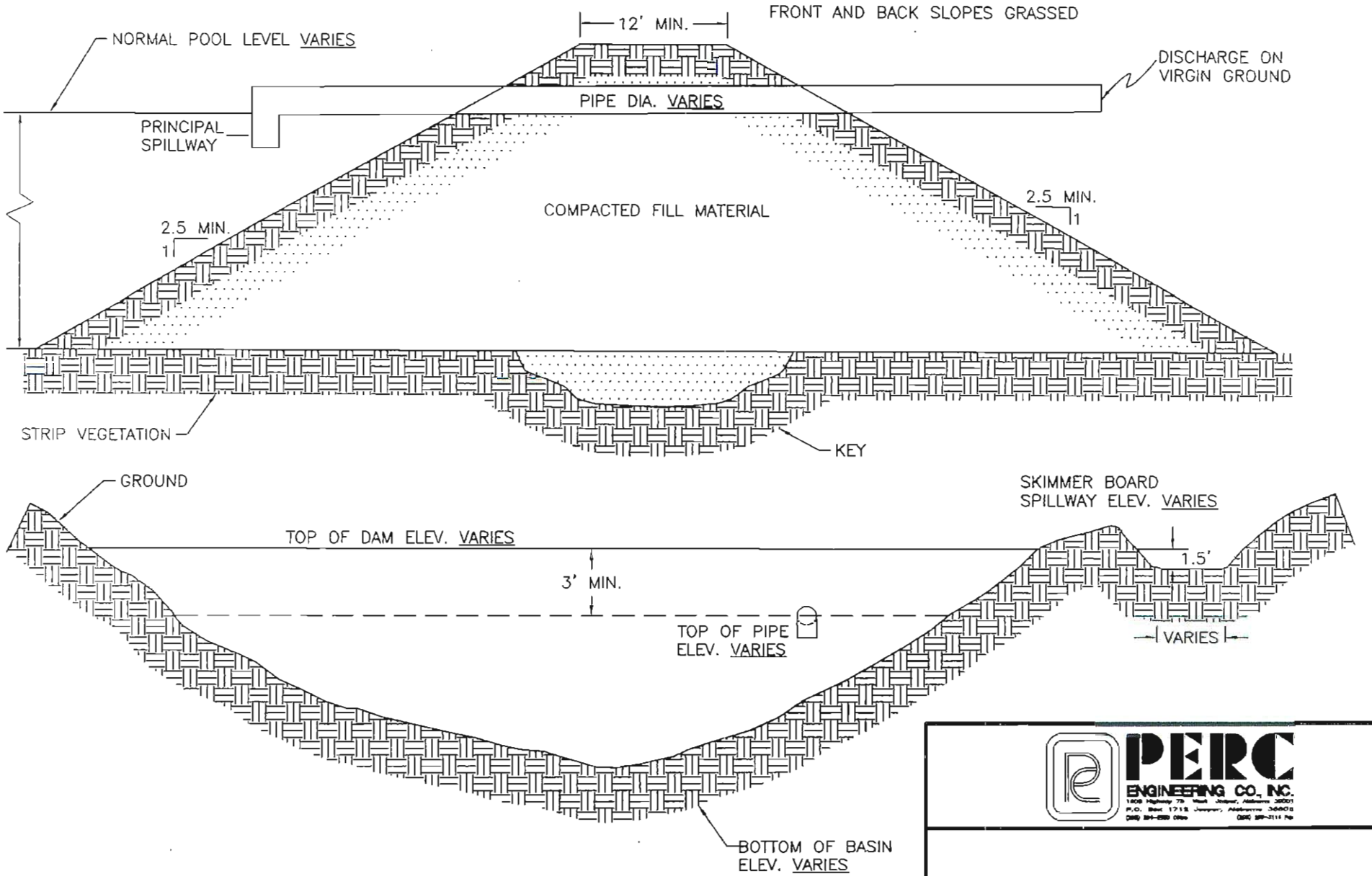

TYPICAL DAM DETAIL
NO SCALE

PERC ENGINEERING CO., INC.

TYPICAL DAM DETAIL

DRAWN BY:	J.W.T.	DATE:	04-16-2009
DWG. NAME:	TYPICALS		
APPROVED BY:	L.G.S.	SCALE:	NONE

ATTACHMENT III-B-2-A

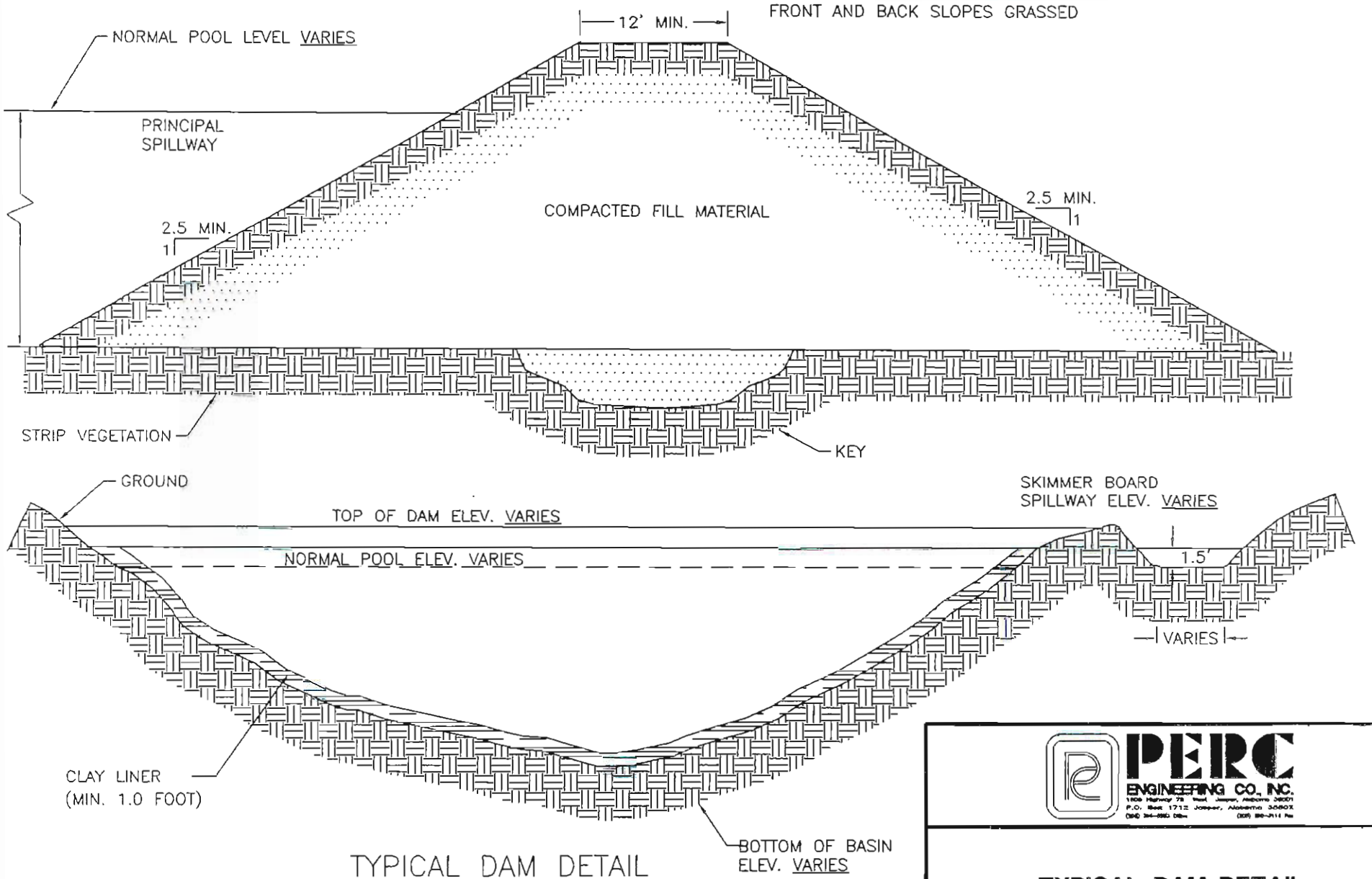

TYPICAL DAM DETAIL
NO SCALE

Lined with 1.0 feet (minimum) of clay material with a permobility no greater than 1 X 10^-6 cm/sec up to the emergency spillway elevation to minimize infiltration and to provide a stable pool level with the clay placed in 6" lifts compacted to 95% of standard proctor.

ATTACHMENT III-B-2-A

PERC ENGINEERING CO., INC.

TYPICAL DAM DETAIL WITH CLAY LINER

DRAWN BY:	J.W.T.	DATE:	4/10/2009
DWG. NAME:	TYPICALS		
APPROVED BY:	L.G.S.	SCALE:	NONE

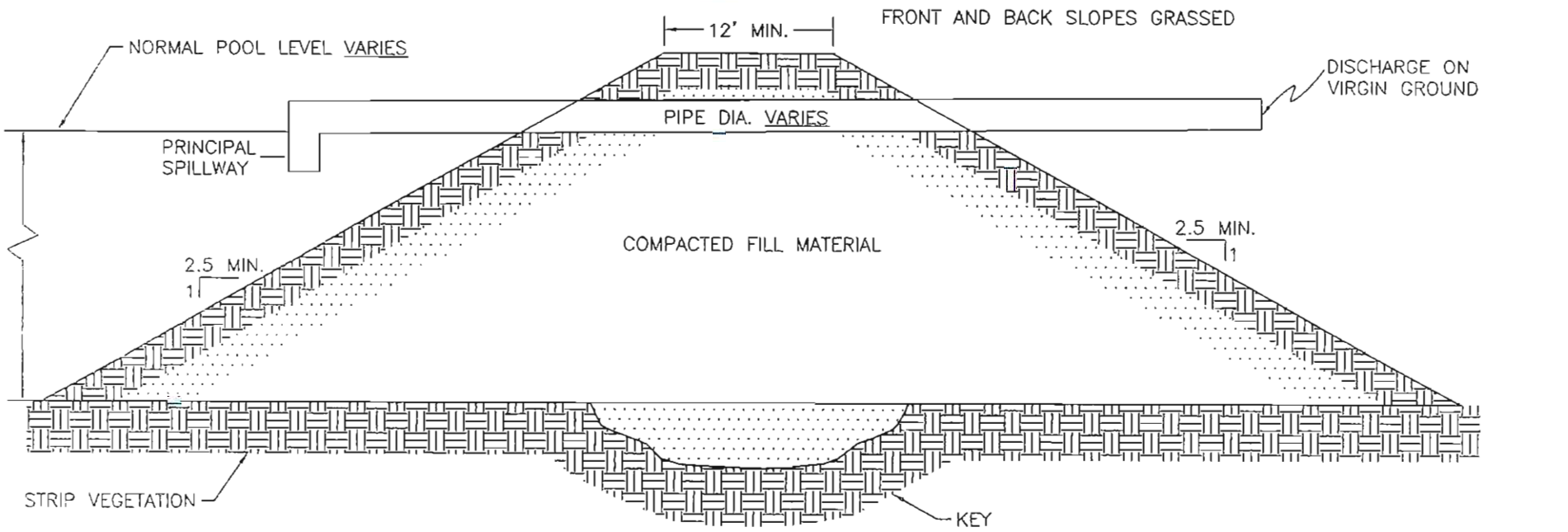

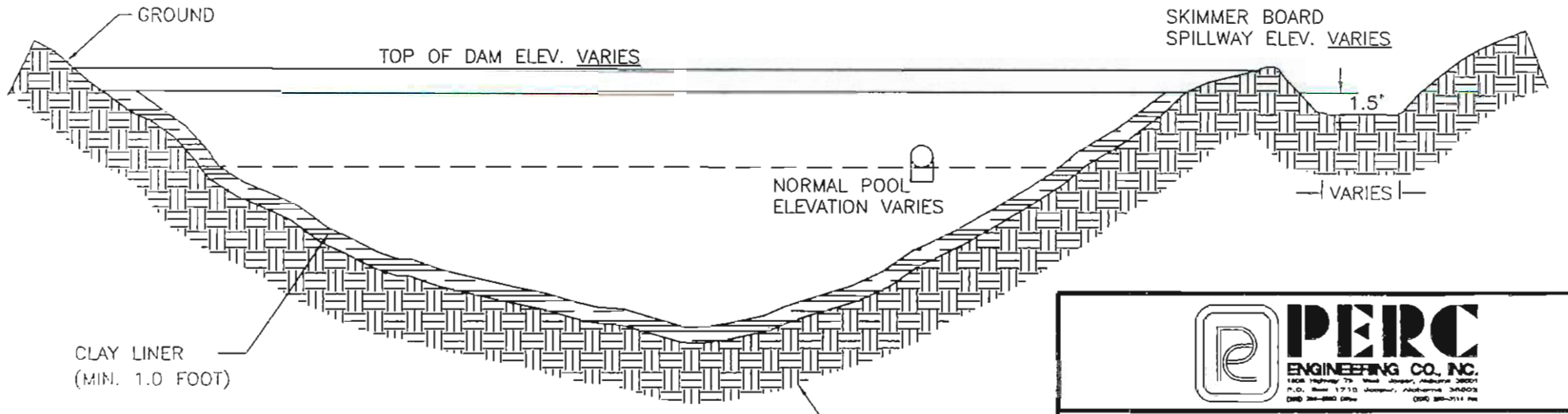

TYPICAL DAM DETAIL
NO SCALE

Lined with 1.0 feet (minimum) of clay material with a permability no greater than 1 X 10^-6 cm/sec up to the emergency spillway elevation to minimize infiltration and to provide a stable pool level with the clay placed in 6" lifts compacted to 95% of standard proctor.

ATTACHMENT III-B-2-A

PERC ENGINEERING CO., INC.

TYPICAL DAM DETAIL WITH CLAY LINER

DRAWN BY:	J.W.T.	DATE:	4/10/2009
DWG. NAME:	TYPICALS		
APPROVED BY:	L.G.S.	SCALE:	NONE

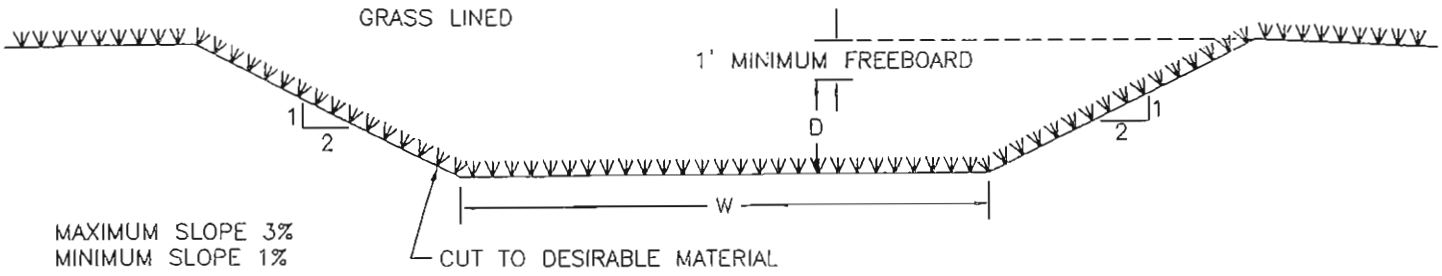

$$Q = \frac{1.49}{N} A R^{2/3} S^{1/2}$$

N(LOOSE STONE OR GRASS LINED) = 0.035
A = AREA
R = AREA/WETTED PERIMETER
S = SLOPE

* GRASS LINING: FESCUE, BERMUDA, RYE GRASS

DIVERSION CHANNEL DEPTH (D) FOR WIDTH (W) 8.0 FT.	
PEAK FLOW Q (CFS)	DEPTH D (FT)
1–15	0.5
15–50	1.0
50–100	1.5
100–180	2.0
180–270	2.5

DIVERSION CHANNEL DEPTH (D) FOR WIDTH (W) 10.0 FT.	
PEAK FLOW Q (CFS)	DEPTH D (FT)
0–15	0.5
15–60	1.0
60–120	1.5
120–210	2.0
210–320	2.5

DIVERSION CHANNEL DEPTH (D) FOR WIDTH (W) 12.0 FT.	
PEAK FLOW Q (CFS)	DEPTH D (FT)
0–20	0.5
20–70	1.0
70–150	1.5
150–250	2.0
250–383	2.5

DIVERSION CHANNEL DEPTH (D) FOR WIDTH (W) 15.0 FT.	
PEAK FLOW Q (CFS)	DEPTH D (FT)
0–20	0.5
20–90	1.0
90–180	1.5
180–300	2.0
300–450	2.5

PERC ENGINEERING CO., INC.

TYPICAL PERMANENT DIVERSION FOR BASIN DISPOSAL

DRAWN BY: J.W.T. DWG. NAME: TYPICALS	DATE: 04–16–2009
APPROVED BY: L.G.S.	SCALE: NONE

ATTACHMENT III–B–2–A

Applicant: Quality Coal Co., Inc.
Mine Name: Sparks Branch Mine No. 2
Permit Number: P-

(b) Describe in detail the proposed diversion and include plans, maps and cross-sections which comply with 816.43 and 816.44.

This permit application consists of the construction of a permanent diversion, Diversion A-A’ as shown on the Permit Map. Diversion A-A’ will be constructed in accordance with the attached design plans and will begin upon the permit issuance.

Temporary diversions required for the Sparks Branch Mine No. 2 are shown on the permit map, a typical section of proposed diversions is included in this application, and is described in the design and construction guidelines for diversions as prepared for Quality Coal Co., Inc.

Should the need for diversions other than those shown become evident, they will be constructed under the same Guidelines within the area permitted and bonded.

After all mining and reclamation activities are complete the diversions will be reclaimed and revegetated.

See Attachment III-B.-3. for referenced Guidelines.

See Attachment III-B.-2.(a) for Watershed Map for diversion location.

(c) If diversions are temporary, enclose plans for removal, including a timetable and plans for restoration of vegetation, channel characteristics, etc.

See Attachment III-B.-3.

(d) Enclose approvals of other government agencies, where required.

None required.

Applicant: Quality Coal Co., Inc.
Mine Name: Sparks Branch Mine No. 2
Permit Number: P-

Attachment III-B-3

SPECIFICATIONS FOR DIVERSION CHANNELS AND DIVERSION BERMS

1. Temporary diversions shall be constructed to pass safely the peak runoff from a 2-year, 6-hour precipitation event.

2. To protect fills and property and to avoid danger to public health and safety, permanent diversions shall be constructed to pass safely the peak runoff from a 10-year, 6-hour precipitation event. Permanent diversions shall be constructed with gently sloping banks that are stabilized by vegetation.

3. Diversions shall be designed, constructed, and maintained in a manner which prevents additional contributions of suspended solids to stream flow and to runoff outside the permit area, to the extent possible, using the best technology currently available. Appropriate sediment control measures for these diversions may include, but not be limited to, maintenance of appropriate gradients, channel lining, revegetation, roughness structures, and detention basins.

4. No diversion shall be located so as to increase the potential for land slides and no diversion shall be constructed on existing land slides.

5. When no longer needed, each temporary diversion shall be removed and the affected land regraded, topsoiled, and revegetated in accordance with Rules 880-X-10C-.10, 880-X-10C-.11, 880-X-10C-.52 - 880-X-10C-.58, 880-X-10C-.60, and 880-X-10C-.62.

6. Channel linings, when slopes are between 1-3 percent shall consist of both perennial and annual grasses and when slopes are greater than 3 percent, shall consist of riprap or be cut into non-erodible material.

7. Freeboard shall provide protection for transition of flows and for critical areas such as swales and curves along the entire channel length.

8. Energy dissipators shall be installed, when necessary, at discharge points where natural streams and exit velocity of the diversion ditch flow is greater than that of the receiving stream.

9. Excess excavated material not necessary for diversion channel geometry or regrading of the channel shall be disposed of in accordance with Rule 880-X-10C-.36.

10. Topsoil removed from the diversion excavations shall be handled in accordance with Rule 880-X-10C-.07 through

880-X-10C-.11.

11. Diversions shall not be constructed or operated to divert water into underground mines.

12. The embankment or berm foundation area shall be cleared of all organic matter, all surfaces sloped to no steeper than lv:lh and the entire foundation surface scarified.

13. The entire embankment or berm shall be compacted to 95% density, based on standard proctor as outlined in ASTM.

14. The material placed in the berm shall be free of sod, roots, stones over 6 inches in diameter, and other objectionable materials. The fill material shall be placed and spread over the entire fill area, starting at the lowest point of the foundation, in layers not to exceed 12 inches in thickness. Construction of the fill shall be undertaken only at such times as the moisture content of the fill material will permit satisfactory compaction in accordance with paragraph 13.

15. The berm and all disturbed areas shall be seeded with both perennial and annual grasses in order to insure that erosion is minimized. Hay bales or riprap may be placed at the toe of the berm immediately upon completion of construction.

16. All berms shall be examined quarterly for structural weakness, instability, erosion, or other hazardous conditions and maintenance performed as necessary.

DIVERSION/BERM DETAIL

DIVERSION A–A'

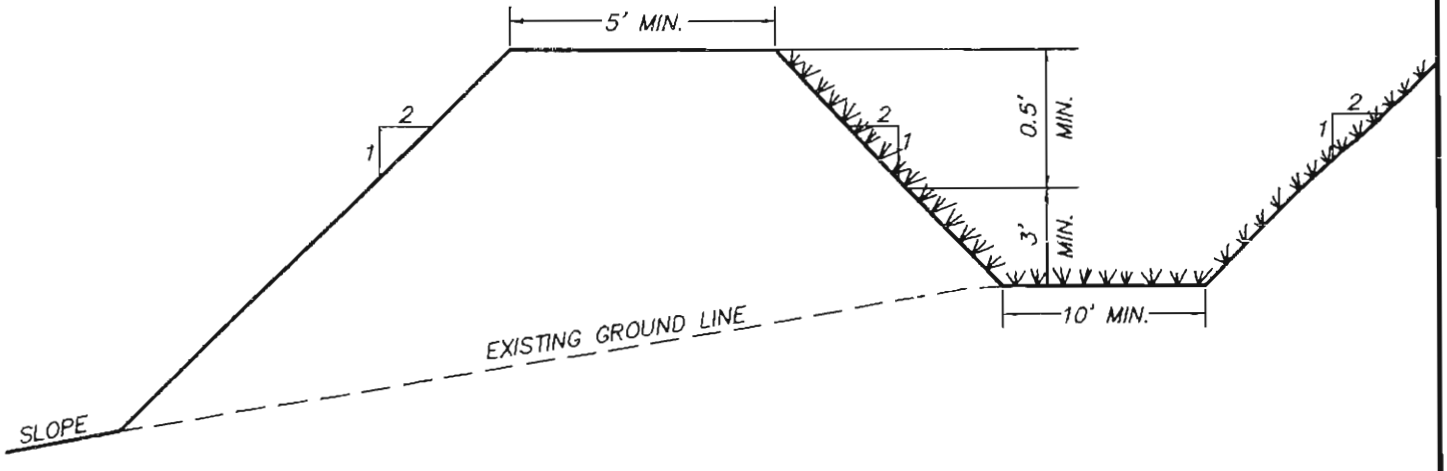

TYPICAL DIVERSION/BERM CROSS SECTION

CHANNEL LINING TO CONSIST OF A MIXTURE OF BERMUDA AND FESCUE GRASSES

Note: The berm material is to consist of a clay material. The Material will be placed in 6 inch lifts and compacted to 95% of the standard proctor density. The standard proctor density will be determined prior to the placement of the material.

PERC ENGINEERING CO., INC.

Typical Diversion Berm Detail

DRAWN BY: J.J.H. DWG. NAME: BRMTYP1	DATE: 1–23–97
APPROVED BY: S.R.I.	SCALE: NONE

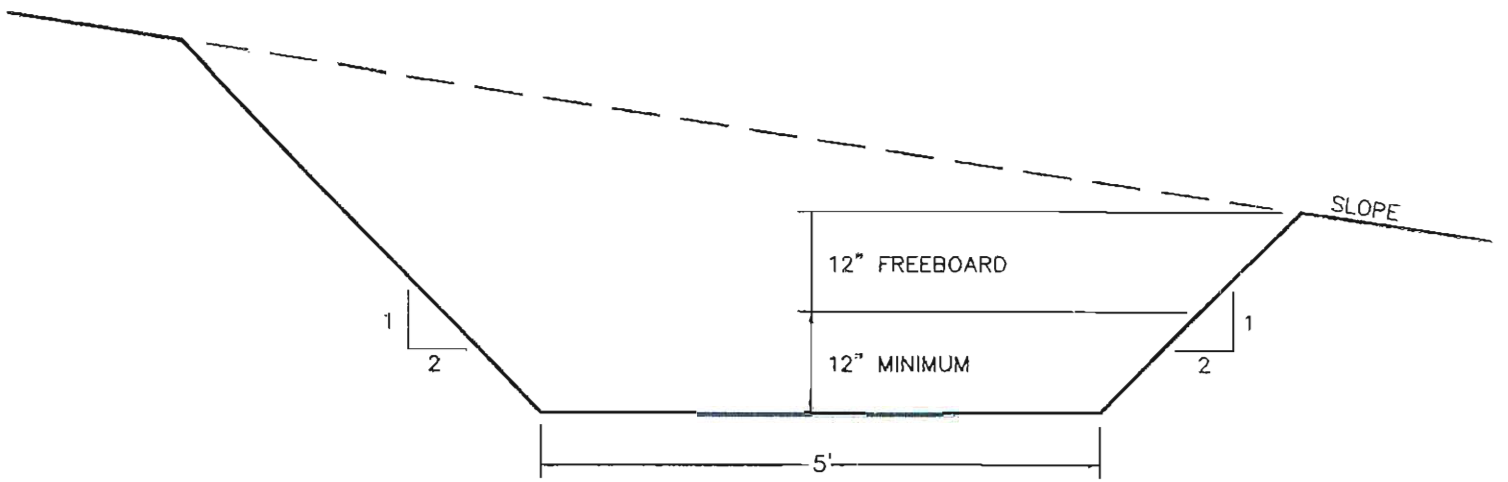

DIVERSION DITCH

TYPICAL DIVERSION CROSS-SECTION
NO SCALE
CHANNEL LINING TO CONSIST OF A MIXTURE OF FESCUE AND BERMUDA GRASS

ATTACHMENT III-B-3
DIVERSION CROSS-SECTION

Applicant: Quality Coal Co., Inc.
Mine Name: Sparks Branch Mine No. 2
Permit Number: P-

4. Disposal of excess spoil. (780.35, 816.71)

Are excess spoil fills proposed?

( ) Yes (XXX) No

If yes, complete the following:

(a) Show on a map the location of all proposed fills and provide cross-sections of the proposed site and the design of the disposal structures.

(b) Include the results of the geotechnical investigation showing:

(1) A description of physical characteristics of bedrock and geological conditions in the disposal area; and

(2) A determination of possible adverse affects from subsidence due to past, present or future underground mining.

(3) Location of springs, seeps, or other ground water observed or anticipated in the disposal area.

(4) A technical description of the rock to be used in construction of rock chimney cores or rock drainage blankets, if applicable.

(5) Results of stability analyses including strength parameters, pore pressures and long term seepage conditions; and

(6) Engineering design assumptions, calculations, and any alternatives considered.

(c) Describe the construction, operation, maintenance and removal (if applicable) of the structure.

(d) Include a surface water drainage and control plan for the fill.

(e) Are rock-toe buttresses or keyway cuts to be used?

( ) Yes ( ) No

If yes, describe or show:

(1) The number, location and depth of test borings or test pits used in describing subsurface conditions; and

(2) Engineering specifications used in the design.

Applicant: Quality Coal Co., Inc.
Mine Name: Sparks Branch Mine No. 2
Permit Number: P-

5. Transportation Facilities (780.33, 780.37)

(a) Describe the measures to be taken to ensure the interest of the public and landowners affected are protected if disturbance within 100 feet of the right-of-way or relocation of a public road is proposed.

1) Safety berms will be constructed adjacent to roadways to be disturbed to contain traffic.
2) Proper signs, informing the traveling public of the disturbance, will be posted along the road right-of-ways 500 feet from the beginning of the disturbance.
3) All safety requirements of the appropriate public health and safety, will be followed.

(b) Describe any unique design, feature, or structure which is necessary for the road to meet the performance standards of Subchapter K using any necessary maps, plans, or cross-sections.

See Attachments III-B-5 and III-B-5(b) for specifications and detailed designs of the road at this facility.

(c) Describe, in detail, the measures to be taken during construction, maintenance and use of the transportation facilities to prevent damage to fish and wildlife and their habitat; public and private property; and erosion, siltation, and pollution of water.

Roads will be constructed with the required ditching for proper drainage. Roads will be maintained with a dozer and motor grader patrol as required. Water will be used to reduce erosion and dust emissions. Roads will be located on ridge tops where possible or on the most stable slopes to minimize erosion. Vegetation will not be cleared except as necessary for roadway and ditch construction. After construction of the roads is complete, vegetation will be established on cut and fill slopes that exist along the all roads. To the extent possible, roads will be located above the sediment basins to be constructed for the mining operation in an effort to control or prevent additional contributions of suspended solids to stream flow or runoff outside the permit area and to comply with State and Federal water quality standards applicable to receiving waters and avoid the alteration of the normal flow of water in streambeds or drainage channels while preventing or controlling damage to public or private property. Where it is not possible or is impractical to locate roads in this manner, sediment control devices such as silt fencing, hay bale check dams and rock filter check dams will be used as necessary to maintain water quality. Roads not required for fire and sediment basin access will be reclaimed. See Attachment III-B-5, Attachment III-B-5(b), and Specifications for the construction, maintenance, and reclamation of primary roads.

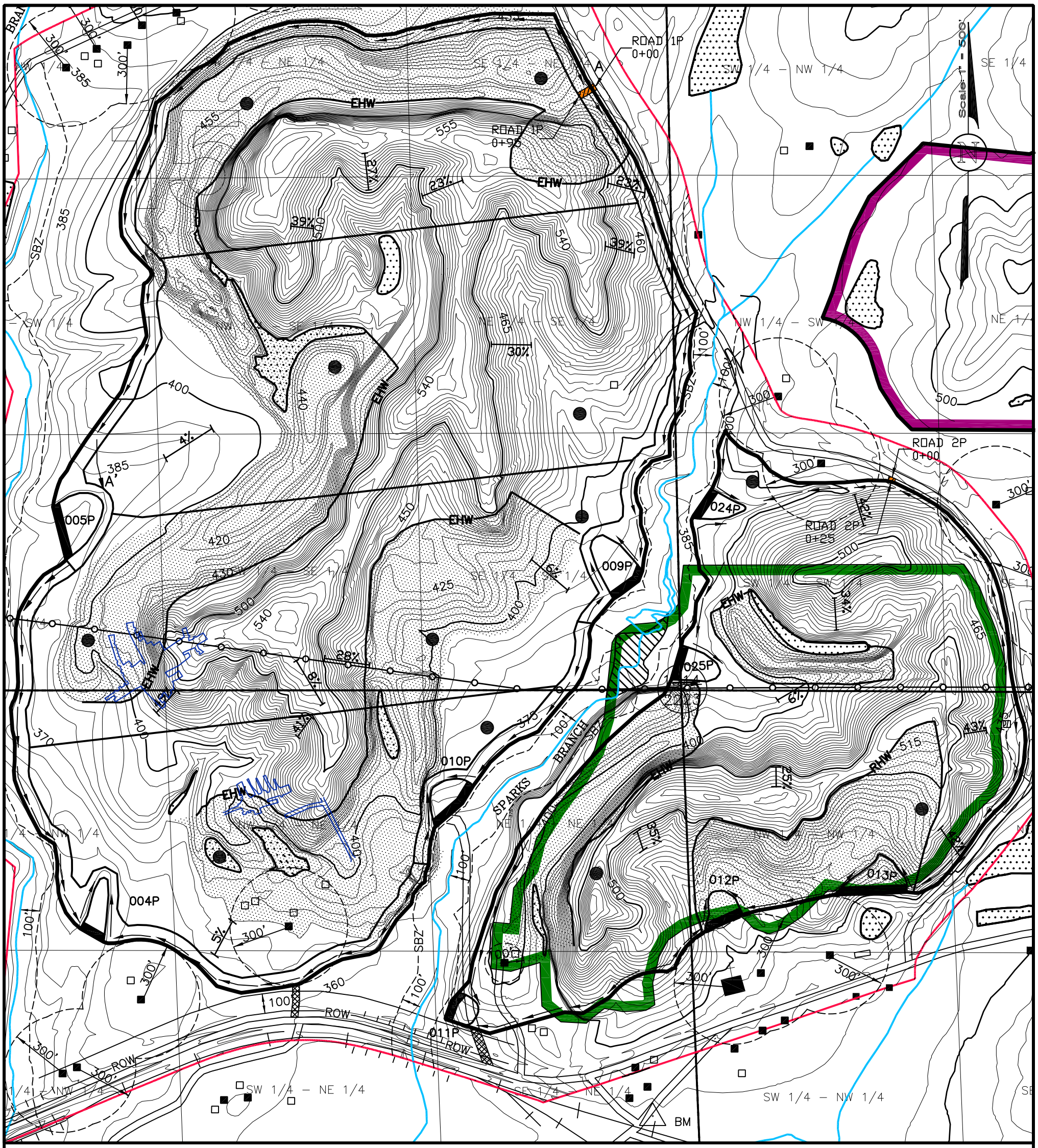

MAP LEGEND

- Permit Boundary
- 400 — Surface Contour
- 001 — Sediment Basin
- 10% — Land Slope Measurement
- EHW — Existing Highwall
- RHW — Reclaimed Highwall
- Diversion Ditch, Berm, or Low Wall
- County Road (Paved unless otherwise designated)
- Road (Private unless otherwise shown)
- Area Previously Surface Mined
- Unoccupied Dwelling (Barn, Shed, Etc.)
- Occupied Dwelling
- Haul Road
- Ancillary Road
- Five Foot Contour Boundary Line Based on Aerial Photography as of 02/10. Mapping Provided by Southern Resource Mapping Corporation, Northport Alabama 35476.
- Coal Stockpile/Equipment Storage Area
- Abandoned Punch Mine– Mary Lee Coal Seam Hillard Coal Co.
- Power Lines
- Private Impoundment
- ASMC Permit P–3907
- ASMC Permit P–3687
- Intermittent Stream
- Perennial Stream
- SBZ — Stream Buffer Zone
- Wetlands

PERC ENGINEERING CO., INC.
1606 Highway 78 West Jasper, Alabama 35501
P.O. Box 1712 Jasper, Alabama 35502
(205) 384–5553 Office (205) 295–3114 Fax

ATTACHMENT III-B-5
HAULROAD LOCATION MAP
QUALITY COAL CO., INC.
SPARKS BRANCH MINE NO. 2
P-3947

DRAWN BY:	J.W.T.	DATE:	05/14/2010
DWG. NAME:	QCSBM2HRLM		
APPROVED BY:	L.G.S.	SCALE:	1"=500'

V:\Steve Miles\Steve Docs\Mines\Sparks Branch No. 2\QCSBM2HRLM.dwg 07/26/10 13:15

Applicant: Quality Coal Co., Inc.
Mine Name: Sparks Branch Mine No. 2
Permit Number: P-

SPECIFICATIONS FOR THE CONSTRUCTION, MAINTENANCE AND RECLAMATION OF ANCILLARY ROADS

1. To the extent possible, roads will be located on ridges or on the most stable available slopes to prevent or minimize erosion, downstream sedimentation and flooding in an effort to prevent adverse effects to fish, wildlife and related environmental values.

2. To the extent possible, roads will be located above the sediment basins to be constructed for the mining operation in an effort to control or prevent additional contributions of suspended solids to stream flow or runoff outside the permit area and to comply with State and Federal water quality standards applicable to receiving waters and avoid the alteration of the normal flow of water in streambeds or drainage channels while preventing or controlling damage to public or private property. Where it is not possible or is impractical to locate roads in this manner, sediment control devices such as silt fencing, hay bale check dams and rock filter check dams will be used as necessary to maintain water quality.

3. Prior to construction, the roadway will be cleared, grubbed and will have the topsoil removed. The clearing limits will be kept to the minimum necessary to accommodate the roadbed and associated ditch construction.

4. Roads will be constructed of suitable subgrade material compacted to ninety-five percent of the standard proctor density and will have a minimum width of ten feet and a maximum width necessary to accommodate the largest equipment traveling the road.

5. Roadbeds will be cut to consolidated non-erodible material or will be surfaced with durable non-toxic, non-acid forming substances. It is anticipated that durable sandstone overburden on site will be utilized as surfacing material. If there should not be adequate sandstone on site, then a durable sandstone material, chert, crushed limestone, crushed concrete, crushed asphalt, red rock, ironore refuse, gravel, or other durable non-toxic, non-acid forming material approved by the Regulatory Authority will be hauled in from off site and placed on the roadbed to a depth of two inches.

6. No sustained grades will exceed ten percent unless deemed necessary, in which case appropriate sediment control facilities will be constructed. If grades in excess of fifteen percent are required, cross drains, ditch relief drains and road drainways will be located at a minimum distance of three-hundred feet.

7. Roads will be constructed so as to have adequate drainage utilizing ditches, cross drains and ditch relief drains.

Roads will not be located in the channel of an intermittent or perennial stream unless specifically approved by the Alabama Surface Mining Commission. Additionally, no relocation and/or alteration of an intermittent or perennial stream will be done unless specifically approved by the Alabama Surface Mining Commission. In the event that it becomes evident that any drainage structures including culverts, bridges and/or low water crossings will be required in order to cross an intermittent or perennial stream, the structure will be designed in accordance with Alabama Surface Mining Commission requirements and prudent engineering practice and the approval of the design(s) will be acquired prior to the commencement of construction. Hay bale check dams and silt fences will be used at strategic locations when necessary to control sediment runoff. Immediately upon completion of construction, the side slopes of the road embankments and/or cuts will be fertilized, seeded with annual and perennial grasses and mulch will be added to aid in the prevention of erosion and to enhance seed germination. The seed mix will consist of, but is not limited to, some combination of the following species: bermuda grass, fescue, lespedeza, rye grass, brown top millet, clover and vetch. The particular species to be planted will vary with the planting season at the time of seed application.

8. Routine maintenance will be required to assure that the road continually meets performance standards and will consist of periodic grading, resurfacing, dust suppression and maintenance of sediment control facilities. Dust suppression will consist of the application of water, chemical binders and/or other dust suppressants. No oil will be utilized in this process. Spot seeding, fertilizing and mulching will be performed as necessary to improve vegetative cover on roadway slopes. A road damaged by a catastrophic event shall be repaired as soon as practicable after the damage has occurred.

9. Roads not to be retained as part of the post mine land use shall be reclaimed in accordance with the approved reclamation plan for this permit as soon as practicable after they are no longer needed as part of the mining and reclamation operation, using the following procedures:

   a. The road will be closed to traffic.
   b. All bridges, culverts and other drainage structures not approved as part of the post mine land use will be removed.
   c. All road surfacing materials that are not compatible with the post mine land use or revegetation requirements will be properly disposed of on-site or removed from the site for re-use.

   d. Roadway cut and fill slopes shall be regraded and reshaped to be compatible with the post mine land use and to compliment the natural drainage pattern of the surrounding terrain.

e. The natural drainage patterns shall be protected from surface runoff and erosion utilizing the installation of dikes and/or cross drains as necessary.

f. The roadbed shall be ripped or scarified as necessary, the topsoil or substitute or approved growing medium shall be replaced and revegetated in accordance with the approved reclamation plan for this permit.

10. The following drawings illustrate typical roadbed configurations for ancillary roads.

TYPICAL HAUL ROAD
FILL SECTION

NO SCALE

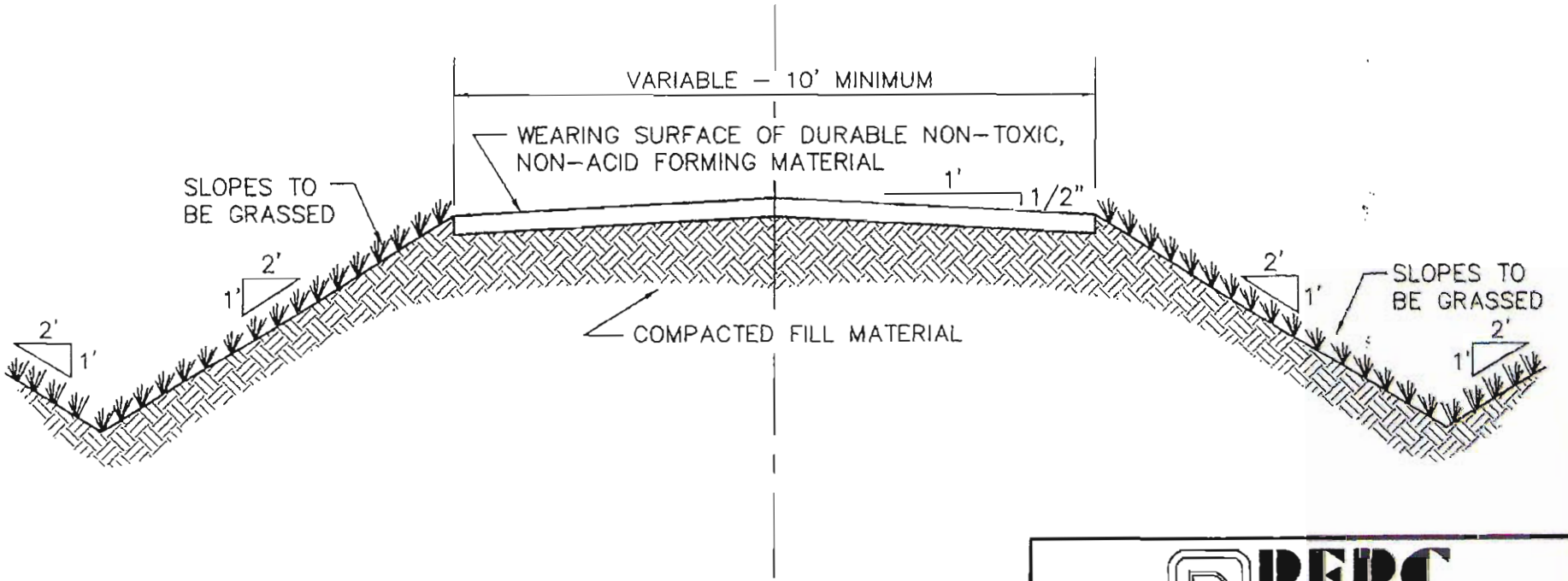

PERC ENGINEERING CO., INC.

TYPICAL FILL SECTION
ANCILLARY HAUL ROAD

DRAWN BY:	K.D.P.	DATE:	2-3-97
DWG. NAME:	TYPHAULA		
APPROVED BY:	S.R.I.	SCALE:	NONE

ATTACHMENT III.–B.–5.

TYPICAL HAUL ROAD
CUT SECTION

NO SCALE

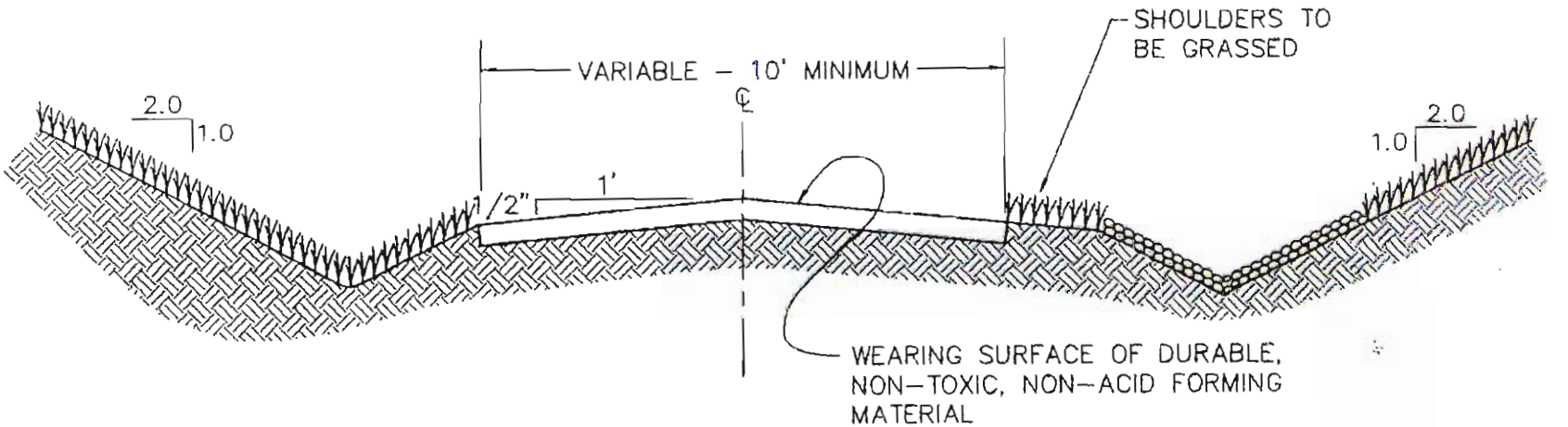

PERC ENGINEERING CO. INC.

TYPICAL CUT SECTION
ANCILLARY HAUL ROAD

DRAWN BY: K.D.P. DWG. NAME: TYPHAULB	DATE: 2–3–97
APPROVED BY: S.R.I.	SCALE: NONE

ATTACHMENT III.–B.–5.

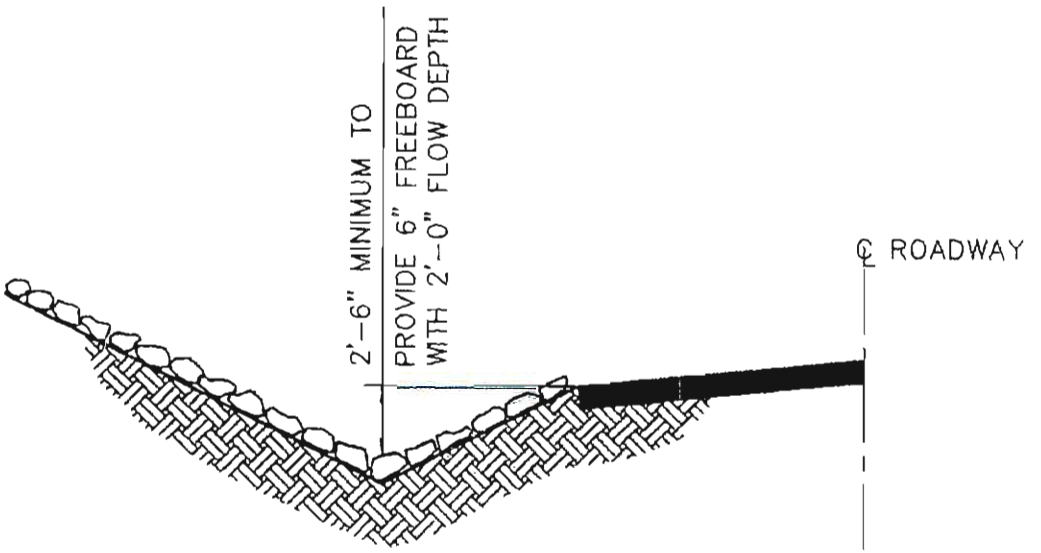

DITCH GRADIENT 11% TO 17%

DITCH CHANNEL TO BE LINED WITH NON-ERODIBLE NON-TOXIC, NON-ACID FORMING SANDSTONE OR LIMESTONE RIP-RAP. THE RIP-RAP WILL BE "CLASS 2" RIP-RAP AND HAVE A MINIMUM THICKNESS OF 16".

PERC ENGINEERING CO. INC.

TYPICAL ANCILLARY ROADWAY DITCH CROSS SECTION

DRAWN BY: K.D.P. DWG. NAME: PRIMRD2	DATE: 2-4-97
APPROVED BY: R.E.P.	SCALE: NONE

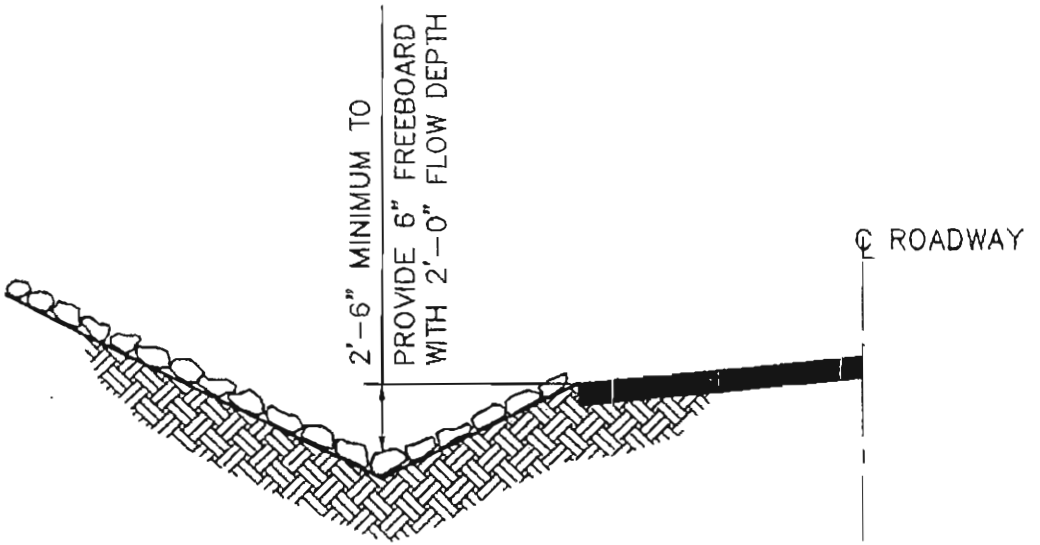

DITCH GRADIENT 5% TO 10%

DITCH CHANNEL TO BE LINED WITH NON-ERODIBLE NON-TOXIC, NON-ACID FORMING SANDSTONE OR LIMESTONE RIP-RAP. THE RIP-RAP WILL BE "CLASS 1" RIP-RAP AND HAVE A MINIMUM THICKNESS OF 12".

PERC ENGINEERING CO., INC.

TYPICAL ANCILLARY ROADWAY DITCH CROSS SECTION

DRAWN BY:	K.D.P.	DATE:	2-4-97
DWG. NAME:	PRIMRD1		
APPROVED BY:	R.E.P.	SCALE:	NONE

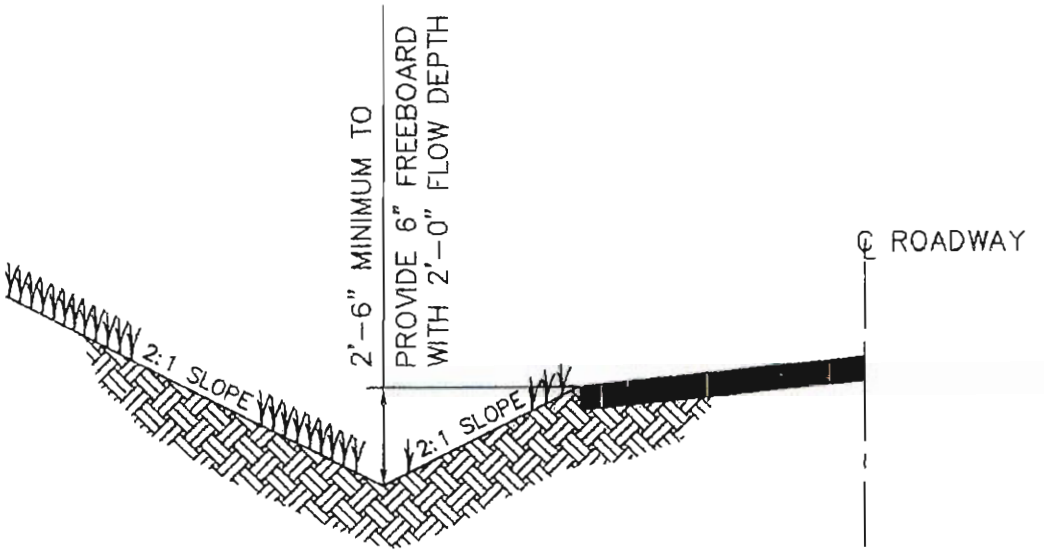

MINIMUM DITCH GRADIENT = 1%

MAXIMUM DITCH GRADIENT = 5%

DITCH CHANNEL TO BE VEGETATED WITH A MIXTURE OF BERMUDA GRASS, FESCUE, AND LESPEDEZA TO CONFORM TO CLASS "D" RETARDANT CLASS.

PERC ENGINEERING CO. INC.

TYPICAL ANCILLARY ROADWAY DITCH CROSS SECTION

DRAWN BY:	K.D.P.	DATE:	2-4-97
DWG. NAME:	ANCIROAD		
APPROVED BY:	R.E.P.	SCALE:	NONE

Applicant: Quality Coal Co., Inc.
Mine Name: Sparks Branch Mine No. 2
Permit Number: P-

SPECIFICATIONS FOR THE CONSTRUCTION, MAINTENANCE AND RECLAMATION OF PRIMARY ROADS

1. Primary roads shall be designed by or under the direction of a registered professional engineer in accordance with the Alabama Surface Mining Commission rules and regulations and prudent engineering practice.

2. Each roadway embankment will be designed and constructed so as to have a minimum static safety factor of 1.3.

3. To the extent possible, roads will be located on ridges or on the most stable available slopes to prevent or minimize erosion, downstream sedimentation and flooding in an effort to prevent adverse effects to fish, wildlife and related environmental values.

4. To the extent possible, roads will be located above the sediment basins to be constructed for the mining operation in an effort to control or prevent additional contributions of suspended solids to stream flow or runoff outside the permit area and to comply with State and Federal water quality standards applicable to receiving waters and avoid the alteration of the normal flow of water in streambeds or drainage channels while preventing or controlling damage to public or private property. Where it is not possible or is impractical to locate roads in this manner, sediment control devices such as silt fencing, hay bale check dams and rock filter check dams will be used as necessary to maintain water quality. No fording of intermittent or perennial streams will be conducted unless specifically approved by the Alabama Surface Mining Commission as temporary routes to be used during road construction.

5. Prior to construction, the roadway will be cleared, grubbed and will have the topsoil removed. The clearing limits will be kept to the minimum necessary to accommodate the roadbed and associated ditch construction.

6. Roads will be constructed of suitable compacted subgrade material. The material will be free of sod, roots, stones over 12 inches in diameter, and other objectionable materials. The material will be placed and spread over the entire fill area, starting at the lowest point in layers not to exceed 12 inches in thickness. The material will be compacted to 95 percent of the density, based on standard proctor as outlined in ASTM.

7. Primary roads will have a minimum width of eighteen feet and a maximum width necessary to accommodate the largest equipment traveling the road.

8. Roadbeds will be cut to consolidated non-erodible material or will be surfaced with durable non-toxic, non-acid forming

substances. The wearing surface will consist of durable sandstone, chert, crushed limestone, crushed concrete, crushed asphalt, red rock, ironore refuse, gravel, or other durable non-toxic, non-acid forming material approved by the Regulatory Authority. The wearing surface will be placed on the roadbed to a depth of four inches.

9. No sustained grades will exceed ten percent unless deemed necessary, in which case appropriate sediment control facilities will be constructed. If grades in excess of fifteen percent are required, cross drains, ditch relief drains and road drainways will be located at a minimum distance of three-hundred feet.

10. Roads will be constructed so as to have adequate drainage utilizing ditches, culverts, cross drains and ditch relief drains designed to safely pass the peak runoff from a ten year, six hour precipitation event. Drainage pipes and culverts shall be installed as designed and will be maintained in a free and operating condition to prevent and control erosion at inlets and outlets. Culverts have been designed to support the load of the heaviest equipment to travel the road and are based on the Handbook of Steel Drainage and Highway Construction Products by the American Iron and Steel Institute and the equipment specifications. Drainage ditches will be constructed and maintained in accordance with the approved design to prevent uncontrolled drainage over the road surface and embankment. Roads will not be located in the channel of an intermittent or perennial stream unless specifically approved by the Alabama Surface Mining Commission. Additionally, no relocation and/or alteration of an intermittent or perennial stream will be done unless specifically approved by the Alabama Surface Mining Commission. In the event that it becomes evident that any drainage structures including culverts, bridges and/or low water crossings will be required in order to cross an intermittent or perennial stream, the structure will be designed and constructed in accordance with Alabama Surface Mining Commission requirements and prudent engineering practice and the approval of the design(s) will be acquired prior to the commencement of construction. Hay bale check dams and silt fences will be used at strategic locations when necessary to control sediment runoff. Immediately upon completion of construction, the side slopes of the road embankments and/or cuts will be fertilized, seeded with annual and perennial grasses and mulch will be added to aid in the prevention of erosion and to enhance seed germination. The seed mix will consist of, but is not limited to, some combination of the following species: Bermuda grass, fescue, lespedeza, rye grass, brown top millet, clover and vetch. The particular species to be planted will vary with the planting season at the time of seed application. Upon completion of construction of each phase of the roadway the construction will be certified to the Alabama Surface Mining Commission as

having been done in accordance with the approved plans for the roadway and associated facilities.

11. Routine maintenance will be required to assure that the road continually meets performance standards and will consist of periodic grading, resurfacing, dust suppression and maintenance of sediment control facilities. Dust suppression will consist of the application of water, chemical binders and/or other dust suppressants. No oil will be utilized in this process. Spot seeding, fertilizing and mulching will be performed as necessary to improve vegetative cover on roadway slopes. A road damaged by a catastrophic event shall be repaired as soon as practicable after the damage has occurred.

12. Roads not to be retained as part of the post mine land use shall be reclaimed in accordance with the approved reclamation plan for this permit as soon as practicable after they are no longer needed as part of the mining and reclamation operation, using the following procedures:

    a. The road will be closed to traffic.
    b. All bridges, culverts and other drainage structures not approved as part of the post mine land use will be removed.
    c. All road surfacing materials that are not compatible with the post mine land use or revegetation requirements will be properly disposed of on-site or removed from the site for re-use.
    d. Roadway cut and fill slopes shall be regraded and reshaped to be compatible with the post mine land use and to compliment the natural drainage pattern of the surrounding terrain.
    e. The natural drainage patterns shall be protected from surface runoff and erosion utilizing the installation of dikes and/or cross drains as necessary.
    f. The roadbed shall be ripped or scarified as necessary, the topsoil or substitute or approved growing medium shall be replaced and revegetated in accordance with the approved reclamation plan for this permit.

13. The drawings and data contained in the specific design plans illustrate typical roadbed configurations for primary roads as well as site specific design of drainage structures, stability analysis and ditch sections.

TYPICAL HAUL ROAD
CUT SECTION

NO SCALE

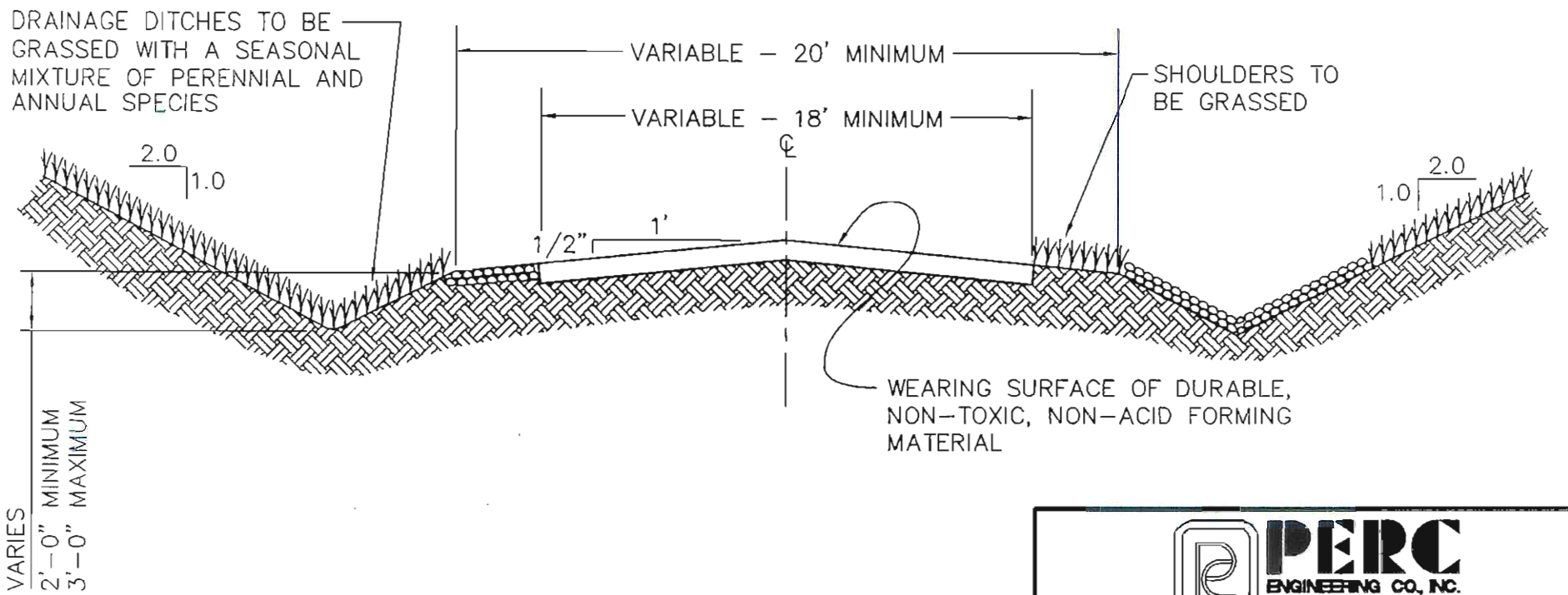

PERC ENGINEERING CO., INC.

TYPICAL CUT SECTION
PRIMARY HAUL ROAD

DRAWN BY:	K.D.P.	DATE:	2–3–97
DWG. NAME:	TYPHAULC		
APPROVED BY:	S.R.I.	SCALE:	NONE

ATTACHMENT III.–B.–5.

TYPICAL HAUL ROAD
FILL SECTION

NO SCALE

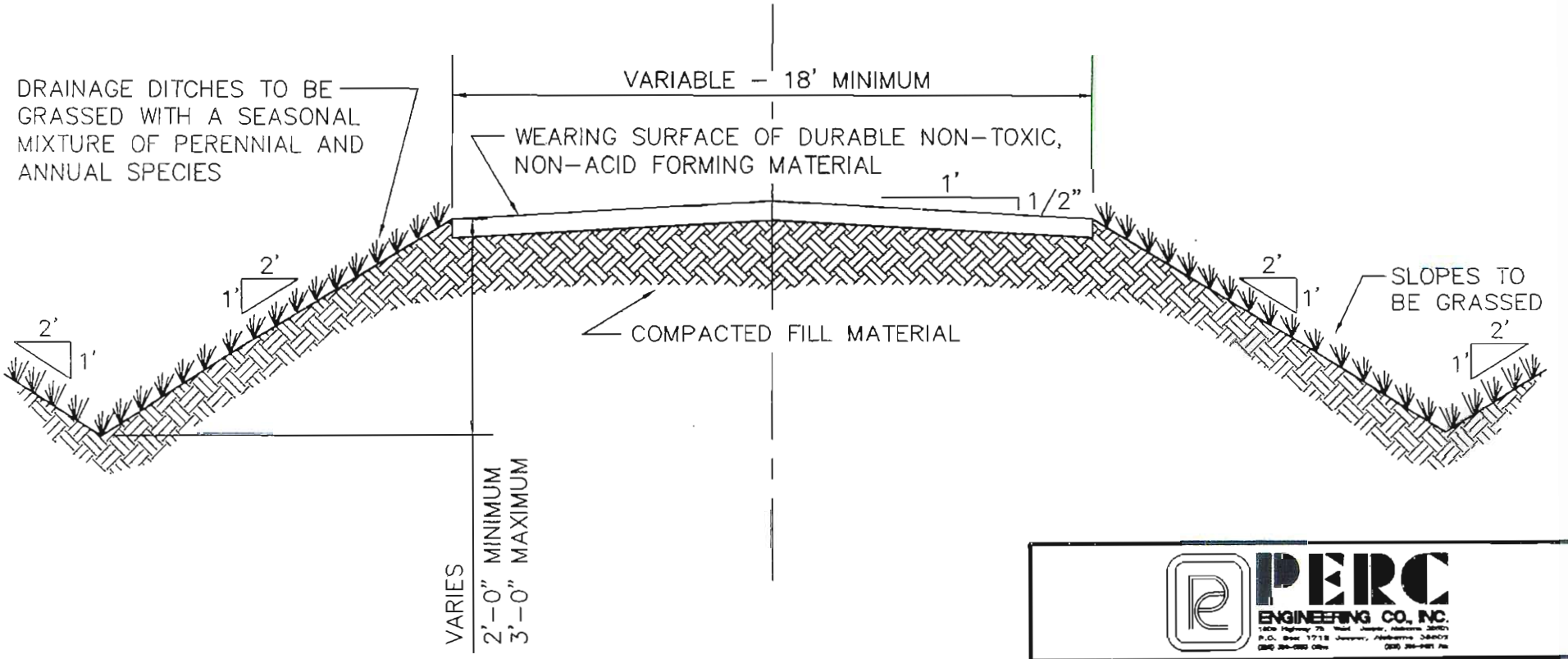

PERC ENGINEERING CO., INC.

TYPICAL FILL SECTION
PRIMARY HAUL ROAD

DRAWN BY:	K.D.P.	DATE:	2–3–97
DWG. NAME:	TYPHAULF		
APPROVED BY:	S.R.I.	SCALE:	NONE

ATTACHMENT III.–B.–5.

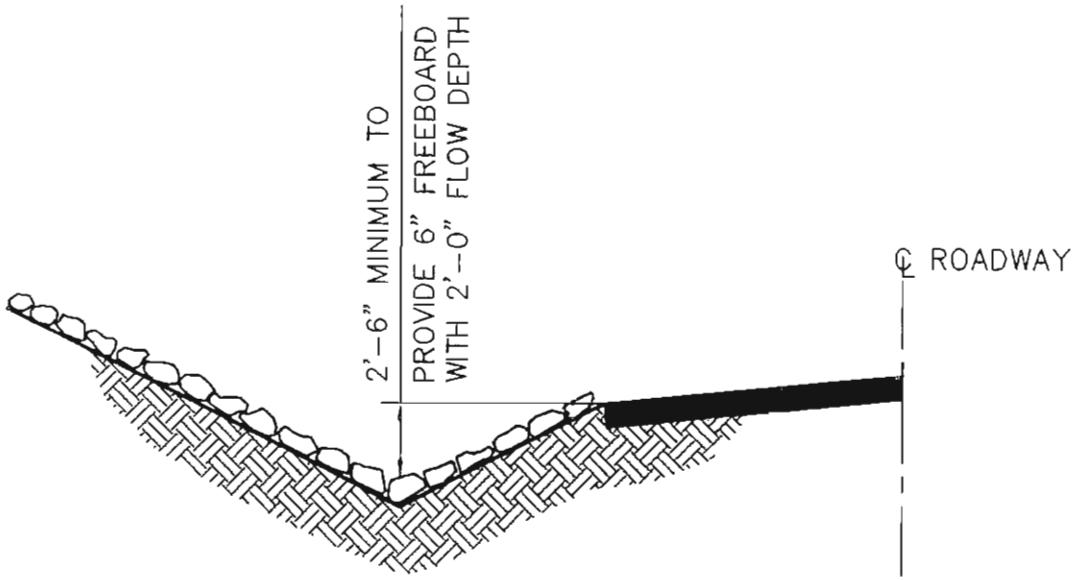

DITCH GRADIENT 5% TO 10%

DITCH CHANNEL TO BE LINED WITH NON-ERODIBLE NON-TOXIC, NON-ACID FORMING SANDSTONE OR LIMESTONE RIP-RAP. THE RIP-RAP WILL BE "CLASS 1" RIP-RAP AND HAVE A MINIMUM THICKNESS OF 12".

PERC ENGINEERING CO., INC.

TYPICAL PRIMARY ROADWAY DITCH CROSS SECTION

DRAWN BY:	K.D.P.	DATE:	2-4-97
DWG. NAME:	PRIMRD1		
APPROVED BY:	R.E.P.	SCALE:	NONE

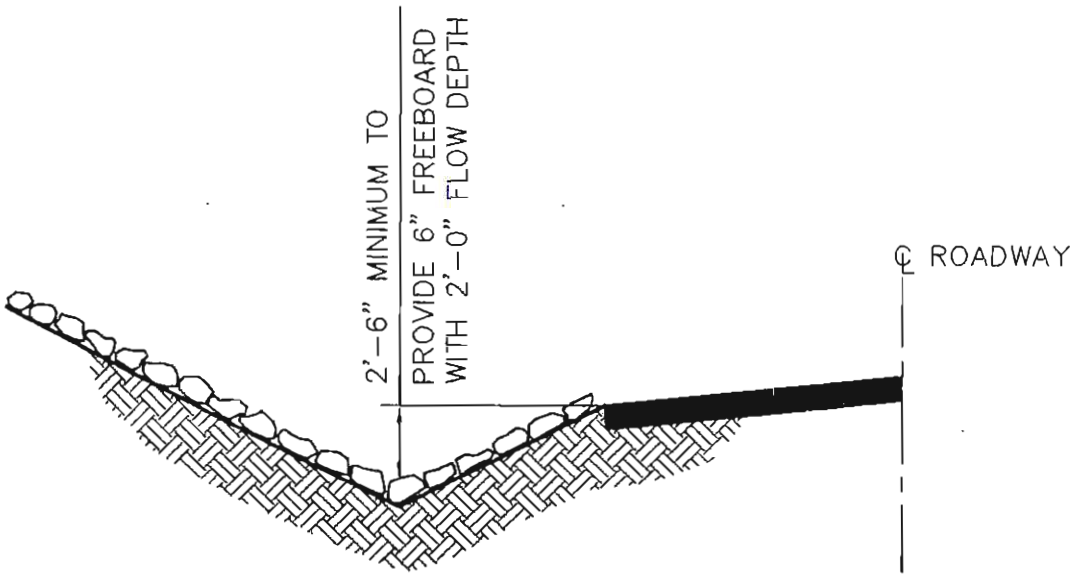

DITCH GRADIENT 11% TO 17%

DITCH CHANNEL TO BE LINED WITH NON-ERODIBLE NON-TOXIC, NON-ACID FORMING SANDSTONE OR LIMESTONE RIP-RAP. THE RIP-RAP WILL BE "CLASS 2" RIP-RAP AND HAVE A MINIMUM THICKNESS OF 16".

PERC ENGINEERING CO., INC.
1608 Highway 78 West Jasper, Alabama 35501
P.O. Box 1711E Jasper, Alabama 35502
(205) 384-6550 office (205) 384-9491 fax

TYPICAL PRIMARY ROADWAY DITCH CROSS SECTION

DRAWN BY:	K.D.P.	DATE:	2-4-97
DWG. NAME:	PRIMRD2		
APPROVED BY:	R.E.P.	SCALE:	NONE

C:\SV\PRIMRD2 02/04/97 08:13

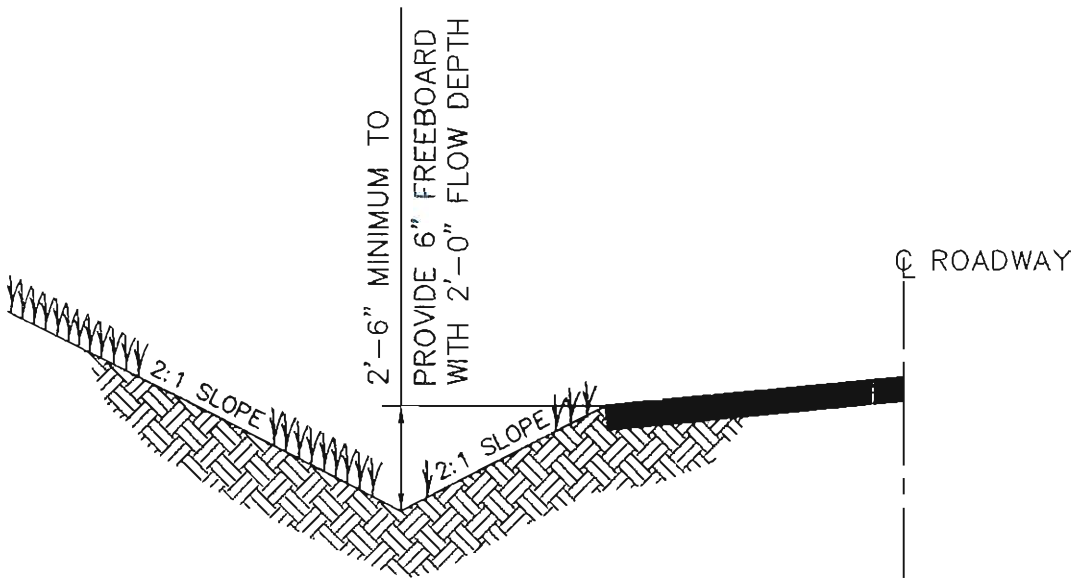

MINIMUM DITCH GRADIENT = 1%

MAXIMUM DITCH GRADIENT = 5%

DITCH CHANNEL TO BE VEGETATED WITH A MIXTURE OF BERMUDA GRASS, FESCUE, AND LESPEDEZA TO CONFORM TO CLASS "D" RETARDANT CLASS.

PERC ENGINEERING CO., INC.

TYPICAL PRIMARY ROADWAY DITCH CROSS SECTION

DRAWN BY:	K.D.P.	DATE:	2-4-97
DWG. NAME:	PRIMROAD		
APPROVED BY:	R.E.P.	SCALE:	NONE

Applicant: Quality Coal Co., Inc.
Mine Name: Sparks Branch Mine No. 2
Permit Number: P-

PART III - OPERATION PLAN

Section C: Blasting Plan

Quality Coal Co., Inc.

Sparks Branch Mine No. 2

_____

Alabama Certified Blaster Number _____

Applicant: Quality Coal Co., Inc.
Mine Name: Sparks Branch Mine No. 2
Permit Number: P-

III. C. Blasting Plans

1. Ground vibrations and airblast control

(a) Check which of the following procedures will be used to limit ground vibration.

X Maximum Peak Particle Velocity

Distance from Shot to Site	Maximum Peak Velocity
0 - 300 feet	1.25 Inches/Sec.
301 - 5000 feet	1.00 Inches/Sec.
5001 - Beyond	0.75 Inches/Sec.

All shots must be seismographed.

X Scaled Distance Factor

Distance from Shot to Site	SD Factor
0 - 300 feet	50
301 - 5000 feet	55
5001 - Beyond	65

Seismograph Monitoring is not required.

___ Modified Scale Distance Factor, approval from the Commission is required before this method can be used.

__ Blasting-level chart, approval from the Commission is required before this method can be used.

* Identify the structure used for measuring the scale distance.

Note: Quality Coal Co., Inc., will use the scaled distance factor method to limit ground vibrations caused by blasting operations at their Sparks Branch Mine No. 2. If for some reason the maximum peak particle velocity method is to be used, the regulatory authority will be notified and blast monitoring equipment as shown in Part III.-C-3(a) will be used. The regulatory authority will be notified as to the location of all blast monitoring sites. When blast operations are conducted within 500 feet of an occupied dwelling, seismographs will be used to monitor the blasts. When blast operations are conducted within 300 feet of an occupied dwelling, the Peak Particle Velocity method will be used to limit ground vibrations. See the permit map for the location of the occupied dwellings.

Applicant: Quality Coal Co., Inc.
Mine Name: Sparks Branch Mine No. 2
Permit Number: P-

(b) Check which of the following maximum levels and corresponding microphone lower frequency limitation will be used.

___ 105 dB peak - c-weighted - slow response *
___ 129 dB peak - 6 Hz or lower
_X_ 133 dB peak - 2 Hz or lower
___ 134 dB peak - 0.1 Hz or lower

Airblast monitoring will be on two consecutive blast starting with the first blast and will be performed on a two month spacing.

2. Describe what variations will be made in the blasting operations to control and correct adverse effects due to blasting.

Variations in burden, spacing, amount of explosives, delays, backfill and stemming will be made as necessary to correct adverse blasting effects. The stemming height and blasting schedule will also be adjusted, if necessary, to help reduce ground vibration. (See Attachment III.-C.-2. For additional variations).

3. Blast Monitoring.

(a) Describe the blast monitoring equipment to be used (make and model). Will it monitor ground vibrations, air blasts, or both?

NOMIS - 5000	2 Hz	Both
NOMIS - 5000	2 Hz	Both
NOMIS - 5000	2 Hz	Both
VME Model Log I	2 Hz	Both
Berger 1000D	2 Hz	Both

(b) How will monitoring equipment be installed and activated?

Equipment will be installed on a temporary basis for one individual shot or on a semi-permanent basis for 24 hour monitoring. The equipment will be activated by an individual or will be triggered by the ground vibrations or airblasts. - Transducers will be buried.

(c) Show the location of blast monitoring stations on the permit map or on a separate map with a scale of 1:24,000 or smaller.

See Attachment III-3-3(c).

* Only with the approval of the Commission.

Applicant: Quality Coal Co., Inc.
Mine Name: Sparks Branch Mine No. 2
Permit Number: P-

4. Is blasting proposed to be conducted within 500 feet of an active underground mine? ( ) Yes (XXX) No

   If yes, concurrence from MSHA is required.

5. Will blasting be conducted within 500 feet of an abandoned underground mine or within 1000 feet of an occupied dwelling, church, school, community or institutional building?
   (XX) Yes ( ) No

   If yes, provide the following information, either as a part of the permit application or at a later date, but before reaching the distance given above. See Attachment III.-C.-5.

   (a) A sketch showing the drill patterns to be used; See Attachment III.-C.-5.
   (b) Critical dimensions, i.e., burden, spacing, stemming, drill hole diameter, etc.; See Attachment III.-C.-5.
   (c) Delay periods; See Attachment III.-C.-5.
   (d) Amount of decking; See Attachment III.-C.-5.
   (e) Type and amount of explosives to be used, including the loading weight (lbs. per foot of drill hole); See Attachment III.-C.-5.
   (f) Location and general description of the structures to be protected; The structures to be protected are those to the southwest and northwest of the permit area (See Permit Map). The structures include mobile homes, wood frame structures and brick veneer structures and concrete block structures.
   (g) Discuss the measures to be used in the blasting operations to protect the public from the adverse effects of blasting; Airblasts will be controlled by maintaining sufficient stemming. Prior to detonation of blasts the blast area will be patrolled, regulated and blocked off by employees to prevent unauthorized entry. Blast warnings will be given prior to each blast and all clear signals will be given after the blast when the blaster in charge determines that to be the case. See Attachment III.-C.-5.-(g)
   (h) The plans are to be prepared and signed by a Certified Blaster. See the sheet preceding the blasting plan.

6. At what times will blasting operations be conducted?

   Blasting will be conducted between 6:00 a.m. and 7:30 p.m., Daylight Savings Time, during daylight hours, Monday through Saturday of each week. This schedule will be valid for the year following its advertisement in a newspaper of local circulation.

7. Will blasting operations be conducted within 300 feet of an occupied dwelling, church, school, community or institutional building?
   ( ) Yes (XXX) No

Applicant: Quality Coal Co., Inc.
Mine Name: Sparks Branch Mine No. 2
Permit Number: P-

Attachment III.-C.-5.-(g)

Measures to be employed in an effort to protect the public from adverse affects due to blasting will include the following:

Airblasts will be minimized by (1) Covering all surface detonating cords with earthen material to confine their blasts. (2) By maintaining a stemming of a minimum of twelve (12) feet. The stemming material will consist of the cuttings from the borehole. Where the twelve (12) foot minimum can not be maintained, stemming material will be changed to crushed stone ranging in diameter from no less than 1/4 to 1/2 inch, and the Ash Formula (.7 X burden)used as the minimum stemming distance. (3) Burden distance will be maintained as designed to ensure no face blowouts occur causing airblasts. (4) Drill patterns will be drilled accurately ensuring that the proper burden and spacing is maintained. (5) Blasting during times of temperature inversions such as early morning and late afternoon will be limited. (6) Delays will be varied to allow for longer delays between the rows than holes.

Ground vibrations will be minimized by (1) Maintaining the designed blasthole patterns. (2) Limiting the charge weight by the scaled distance factor or through the data obtained from the seismograph. (3) Maintaining the proper delays between rows and blastholes in the rows. (4) The delay sequence will be adjusted as needed to control ground vibrations.

Fly rock from a blast will be minimized by (1) Maintaining the stemming of a blasthole at a minimum of twelve (12) feet. When possible the stemming material will consist of the cuttings from the borehole. Where the twelve (12) foot minimum can not be maintained, stemming material will be changed to crushed stone ranging in diameter from no less than 1/4 to 1/2 inch, and the Ash Formula (.7 X burden)used as the minimum stemming distance. (2) Burden distance will be maintained to the designed amount to prevent face blowout due to the burden distance being to small and to prevent blasthole blowout due to the burden distance being to great. (3) Prior to drilling a blast pattern, the bench will be inspected to determine if any geologic inconsistencies are present which could result in weaker zones which might cause a blowout and flyrock. The drill pattern will be altered as needed to avoid such zones if they are present. (4) Prior to the charging of a blast pattern, the drill operator will be consulted to determine if any inconsistencies were encountered during the drilling of the blast pattern. If inconsistencies are found, the charging sequence will be varied to stem through these inconsistencies to prevent blowouts. (5) The charge column of the blasthole will be closely monitored to ensure that the amount of blasting agents are not in excess of the allowable design maximum. (6) The delay sequence will be adjusted as needed to control flyrock. (7) Prior to detonation of blasts the blast area will be patrolled, regulated

and blocked off by employees to prevent unauthorized entry. Blasts occurring within 1000 feet of a public road will require that traffic on the road be stopped prior to the blast, a minimum distance of 1000 feet from the blast site, and held during detonation of the blast and until the all clear signal is sounded. Likewise, people occupying houses within 500 feet of a blast pattern will be given verbal warning, in addition to the normal audible warning, well in advance of detonation of a blast and will be asked to vacate to a safe location until the all clear signal is given. Blast warnings will be given prior to each blast and all clear signals will be given after the blast when the blaster in charge determines that to be the case. Each blast will be visibly monitored to determine whether or not flyrock occurred.

Should it become necessary to switch from the scale distance method of compliance to the maximum peak particle velocity method, the scale distance factor 55 shall be used as the departure point for graduated changes in the charge weight to distance ratio as allowed by the ground response (particle velocity of ground vibrations).

Where this relationship is utilized to determine weight charge per delay within 500 hundred feet of a residence all blasts will be monitored utilizing a seismograph and charge weights will be adjusted based on blast efficiency and ground vibrations to achieve the desired results while remaining within the limitations established by the regulatory authorities.

The closest that any blasting will occur to an occupied dwelling is 300 ft.

The general orientation of pits and the directions of mining of each increment at the Sparks Branch Mine No. 2 are as follows:

Mining will commence within Increment No. 1 along the existing highwall on the Mary Lee Seam in the SW/NE and SE/NE of Section 15, Township 14 South, Range 8 West, Walker County, Alabama. Cut number 1 will be aligned in a generally southwest to northeast direction with advancement toward the south. Spoil material from the first cut will be spoiled toward the north and west into a previously mined area. Cuts 2 thru 7 will continue advancement south bounded on the west and east ends by the existing highwall in Increment No. 1. The spoil material from the following cuts will be spoiled within the pits created by the previous cuts. Pits will generally align in a southwest to northeast direction with advancement to the south. Mining will continue in this manner until the limits of Increment No. 1 are reached.

Mining within Increment No. 2 will be a continuation of operations of Increment No. 1. Spoil material from the first cut of Increment No. 2 will be spoiled within the final open pit of Increment No. 1. Cuts 1 and 6, 2 and 7, 3 and 8, 4 and 9, 5 and 10 will be mined simultaneously. The spoil material from these cuts will be spoiled within the pits created by the previous cuts. Pits will generally align in a southwest to northeast direction with advancement to

the south. Cuts 11 thru 18 will be mined following cut 10 with spoil from these cuts placed in the previous cut. Mining will continue in this manner until the limits of Increment No. 2 are reached.

Mining within Increment No. 3 will be a continuation of operations of Increment No. 2. Spoil material from the first cut of Increment No. 3 will be spoiled within the final open pit of Increment No. 2. The spoil material from the following cuts will be spoiled within the pits created by the previous cuts. Pits will generally align in a southwest to northeast direction with advancement to the south. Cuts 1 thru 4 will encounter the Mary Lee seam only while cuts 5 thru 15 will encounter the Mary Lee and Blue Creek seams. Mining will continue in this manner until the limits of Increment No. 3 are reached.

Mining within Increment No. 4 will be a continuation of operations of Increment No. 3. Spoil material from the first cut of Increment No. 4 will be spoiled within the final open pit of Increment No. 3. The spoil material from the following cuts will be spoiled within the pits created by the previous cuts. Pits will generally align in a southwest to northeast direction with advancement to the south. Mining will continue in this manner until the limits of Increment No. 4 are reached.

Mining within Increment No. 5 will begin in the SW/SW of Section 14, Township 14 South, Range 8 West, Walker County, Alabama. Cut No. 1 will commence along the Mary Lee outcrop on the northern boundary of Increment No. 5 just south of Basin 024P. Spoil material from the first cut of Increment No. 5 will be spoiled adjacent to the outcrop of the Mary Lee seam. The spoil material from the following cuts will be spoiled within the pits created by the previous cuts. Pits will generally align in a southwest to northeast direction with advancement to the southeast. Mining will continue in this manner until the Blue Creek seam is encountered in cut No. 2. Subsequent pits will contain the Mary Lee and Blue Creek seams with mining operations recovering both seams. Mining will continue in this manner until the limits of Increment No. 5, and the permit boundary, are reached.

Along with coal recovery, the fire clay that lies below the Mary Lee Coal Seam will be recovered by Burton Industries, LLC. Clay recovery will commence following coal removal within a cut. After the clay is removed the next cut be drilled and shot. This dual mining sequence will not cause any delays in mining or reclamation. The clay will not be stockpiled within the permit boundary, it will be transported offsite. See Attachment III.-A.-1. Operations Map for cut layout information.

Applicant: Quality Coal Co., Inc.
Mine Name: Sparks Branch Mine No. 2
Permit Number: P-

Attachment III.-C.-5.-(g)

BLASTING SCHEDULE
Quality Coal Co., Inc.
Sparks Branch Mine No. 2

In accordance with Section 880-X-10C-.32(2)(a), of the regulations of the Alabama Surface Mining Commission, notice is hereby given that Quality Coal Co., Inc., P.O. Box 2705 Jasper, AL 35502-2705, Telephone (205) 384-6300, will conduct blasting operations, at it's Sparks Branch Mine No. 2 located near McCollum, Alabama, in Sections 14, 15, 22, and 23, Township 14 South, Range 8 West, Walker County, Alabama. Blasting will be conducted between the hours of sunrise and sunset, Monday through Saturday of each week. Emergency situations which may cause variation from this schedule include, but are not limited to, the following: Equipment breakdowns, Unauthorized work stoppages, or Weather conditions such as rain, lightning, or thunderstorms. All entrance roads to the mining area will be marked with signs reading "Blasting Area" or "Warning Explosives in Use", which list audible warning signals. Prior to each blast, all access roads will be blocked until the "All Clear" signal is given. A horn will be used to give audible warning before a shot is fired and to indicate "All Clear".

Warning Signals:

Five (5) minutes prior to blast	----	3 long blasts of a horn.
Immediately prior to the blast	----	2 long blasts of a horn.
All Clear	----	1 long blast of a horn.