TYPICAL HAUL ROAD
FILL SECTION

NO SCALE

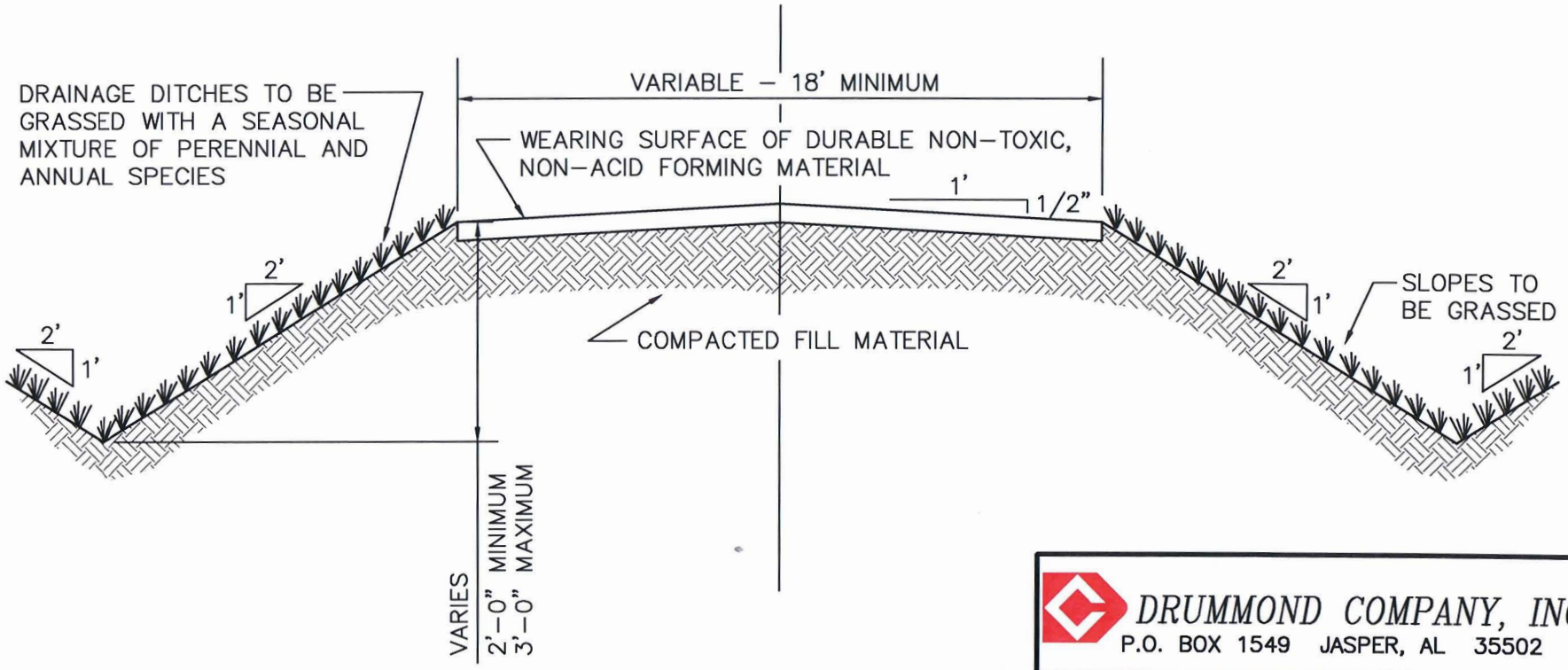

ATTACHMENT III.–B.–5.

DRUMMOND COMPANY, INC.
P.O. BOX 1549 JASPER, AL 35502

TYPICAL FILL SECTION
PRIMARY HAUL ROAD

DRAWN BY: K.D.P. DWG. NAME: TYPHAULF	DATE: 2–3–97
APPROVED BY: S.R.I.	SCALE: NONE

G:\Todd Odom\PITO\S\Drummond ASMC Typical Dwgs\Typhaulf.dwg 11/17/11 08:01

TYPICAL HAUL ROAD
CUT SECTION

NO SCALE

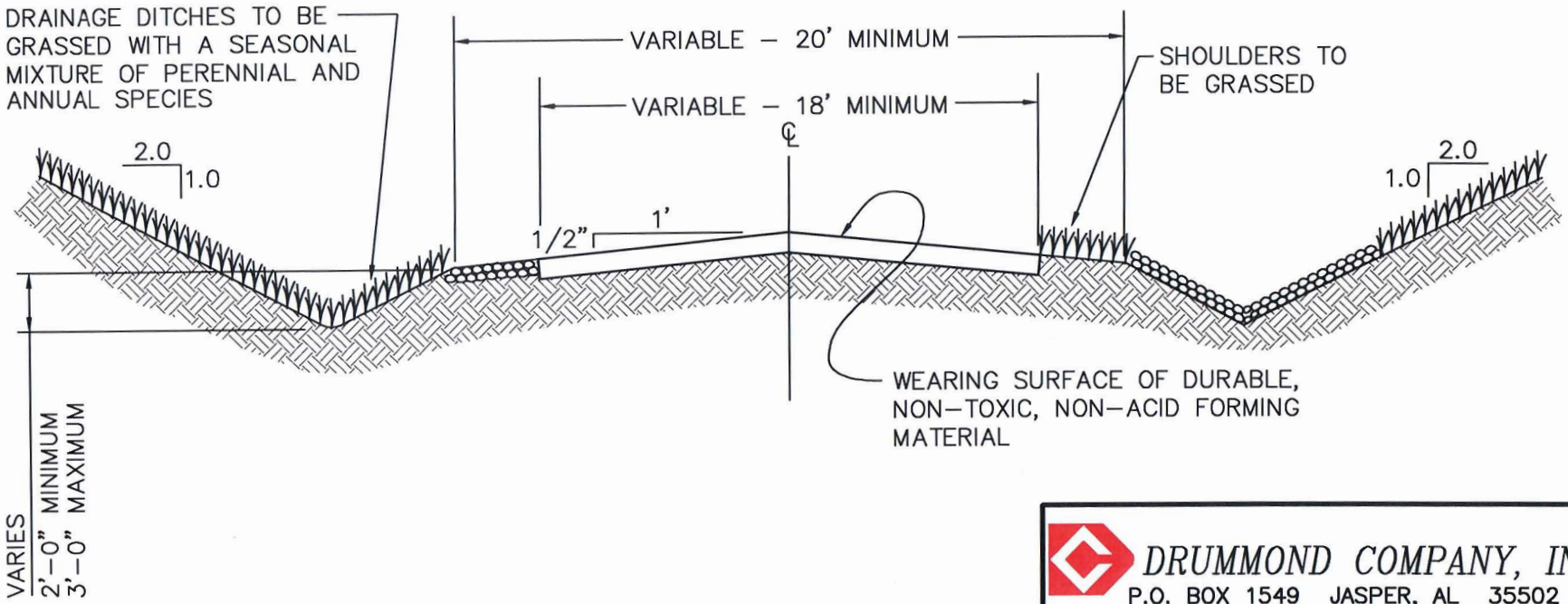

ATTACHMENT III.–B.–5.

DRUMMOND COMPANY, INC.
P.O. BOX 1549 JASPER, AL 35502

TYPICAL CUT SECTION
PRIMARY HAUL ROAD

DRAWN BY: K.D.P. DWG. NAME: TYPHAULC	DATE: 2–3–97
APPROVED BY: S.R.I.	SCALE: NONE

G:\Todd Odom\PITDLS\Drummond ASMC Typical Dwgs\Typhaulc.dwg 11/17/11 08:59

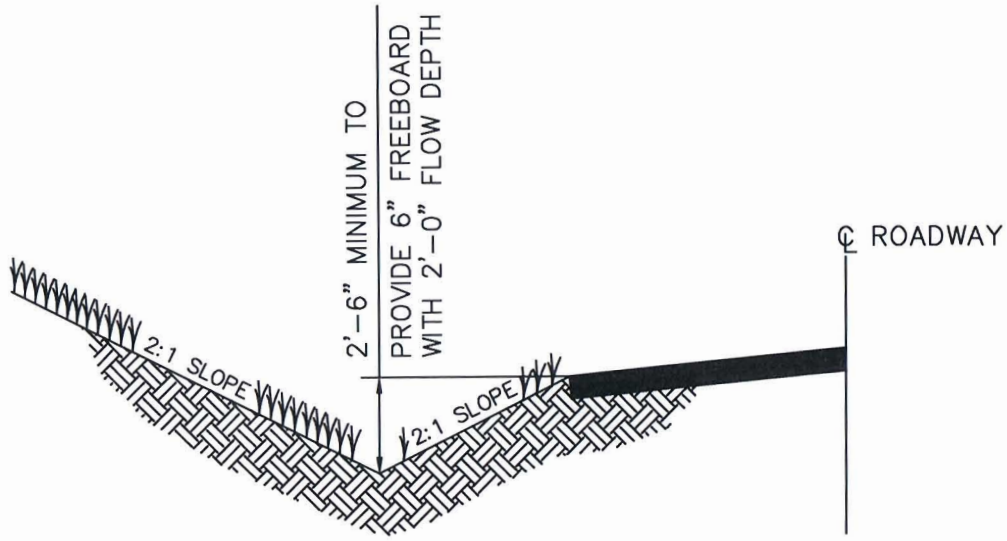

MINIMUM DITCH GRADIENT = 1%

MAXIMUM DITCH GRADIENT = 5%

DITCH CHANNEL TO BE VEGETATED WITH A MIXTURE OF BERMUDA GRASS, FESCUE, AND LESPEDEZA TO CONFORM TO CLASS "D" RETARDANT CLASS.

ATTACHMENT III.-B.-5.

DRUMMOND COMPANY, INC.
P.O. BOX 1549 JASPER, AL 35502

TYPICAL PRIMARY ROADWAY DITCH CROSS SECTION

DRAWN BY:	K.D.P.	DATE:	2-4-97
DWG. NAME:	PRIMROAD		
APPROVED BY:	R.E.P.	SCALE:	NONE

G:\Todd Odom\PTD\S\Drummond ASMC Typical Dwgs\Primroad.dwg 11/17/11 08:53

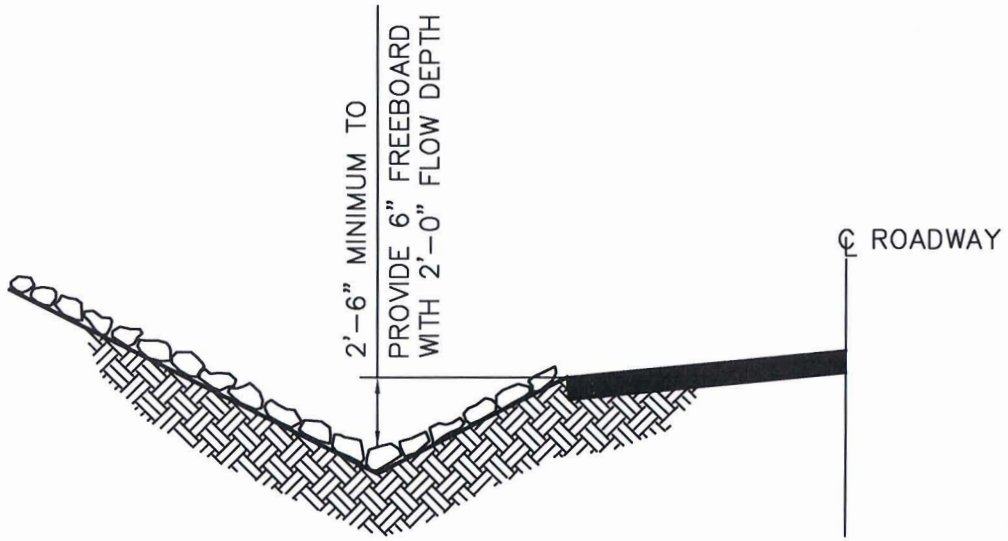

DITCH GRADIENT 5% TO 10%

DITCH CHANNEL TO BE LINED WITH NON-ERODIBLE NON-TOXIC, NON-ACID FORMING SANDSTONE OR LIMESTONE RIP-RAP. THE RIP-RAP WILL BE "CLASS 1" RIP-RAP AND HAVE A MINIMUM THICKNESS OF 12".

ATTACHMENT III.-B.-5.

DRUMMOND COMPANY, INC.
P.O. BOX 1549 JASPER, AL 35502

TYPICAL PRIMARY ROADWAY DITCH CROSS SECTION

DRAWN BY: K.D.P. DWG. NAME: PRIMRD1	DATE: 2-4-97
APPROVED BY: R.E.P.	SCALE: NONE

G:\Todd Odom\PTO\S\Drummond ASMG Topics Dwg\Primrd1.dwg 11/17/11 08:52

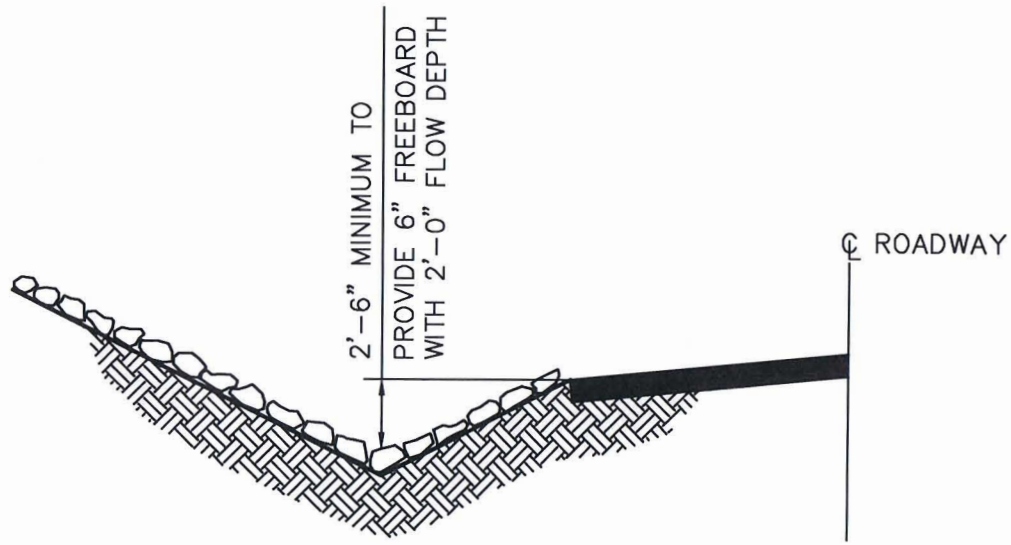

DITCH GRADIENT 11% TO 17%

DITCH CHANNEL TO BE LINED WITH NON-ERODIBLE NON-TOXIC, NON-ACID FORMING SANDSTONE OR LIMESTONE RIP-RAP. THE RIP-RAP WILL BE "CLASS 2" RIP-RAP AND HAVE A MINIMUM THICKNESS OF 16".

ATTACHMENT III.-B.-5.

DRUMMOND COMPANY, INC.
P.O. BOX 1549 JASPER, AL 35502

TYPICAL PRIMARY ROADWAY DITCH CROSS SECTION

DRAWN BY: K.D.P. DWG. NAME: PRIMRD2	DATE: 2-4-97
APPROVED BY: R.E.P.	SCALE: NONE

C:\Todd Odom\PTD\S\Drummond ASMC Typical Dwgs\Primrd2.dwg 11/17/11 08:52