HYDROLOGY STUDY FOR
GUNNER-REILLY CORP.

CANE CREEK MINE

P-3952

WALKER COUNTY, ALABAMA

BY

PERC ENGINEERING CO., INC.

P.O. BOX 1712

JASPER, ALABAMA 35502

DETAILED DESIGN PLANS

DIVERSION DITCH 1-2, 3-4 & 5-6

ATTACHMENT III-B-3

JULY 28, 2011

SPECIFICATIONS FOR DIVERSION CHANNELS AND DIVERSION BERMS

1. Temporary diversions shall be constructed to pass safely the peak runoff from a 2-year, 6-hour precipitation event.

2. To protect fills and property and to avoid danger to public health and safety, permanent diversions shall be constructed to pass safely the peak runoff from a 10-year, 6-hour precipitation event. Permanent diversions shall be constructed with gently sloping banks that are stabilized by vegetation.

3. Diversions shall be designed, constructed, and maintained in a manner which prevents additional contributions of suspended solids to stream flow and to runoff outside the permit area, to the extent possible, using the best technology currently available. Appropriate sediment control measures for these diversions may include, but not be limited to, maintenance of appropriate gradients, channel lining, re-vegetation, roughness structures, and detention basins.

4. No diversion shall be located so as to increase the potential for land slides and no diversion shall be constructed on existing land slides.

5. When no longer needed, each temporary diversion shall be removed and the affected land re-graded, top-soiled, and re-vegetated in accordance with Rules 880-X-10C-.10, 880-X-10C-.11, 880-X-10C-.52 - 880-X-10C-.58, 880-X-10C-.60, and 880-X-10C-.62.

6. Channel linings, when slopes are between 1-3 percent shall consist of both perennial and annual grasses and when slopes are greater than 3 percent, shall consist of riprap or be cut into non-erodible material.

7. Freeboard shall provide protection for transition of flows and for critical areas such as swales and curves along the entire channel length.

8. Energy dissipaters shall be installed, when necessary, at discharge points where natural streams and exit velocity of the diversion ditch flow is greater than that of the receiving stream.

9. Excess excavated material not necessary for diversion channel geometry or re-grading of the channel shall be disposed of in accordance with Rule 880-X-10C-.36.

10. Topsoil removed from the diversion excavations shall be handled in accordance with Rule 880-X-10C-.07 through 880-X-10C-.11.

11. Diversions shall not be constructed or operated to divert water into underground mines.

12. The embankment or berm foundation area shall be cleared of all organic matter, all surfaces sloped to no steeper than lv:lh and the entire foundation surface scarified.

13. The entire embankment or berm shall be compacted to 95% density, based on standard proctor as outlined in ASTM.

14. The material placed in the berm shall be free of sod, roots, stones over 6 inches in diameter, and other objectionable materials. The fill material shall be placed and spread over the entire fill area, starting at the lowest point of the foundation, in layers not to exceed 12 inches in thickness. Construction of the fill shall be undertaken only at such times as the moisture content of the fill material will permit satisfactory compaction in accordance with paragraph 13.

15. The berm and all disturbed areas shall be seeded with both perennial and annual grasses in order to insure that erosion is minimized. Hay bales or riprap may be placed at the toe of the berm immediately upon completion of construction.

16. All berms shall be examined quarterly for structural weakness, instability, erosion, or other hazardous conditions and maintenance performed as necessary.

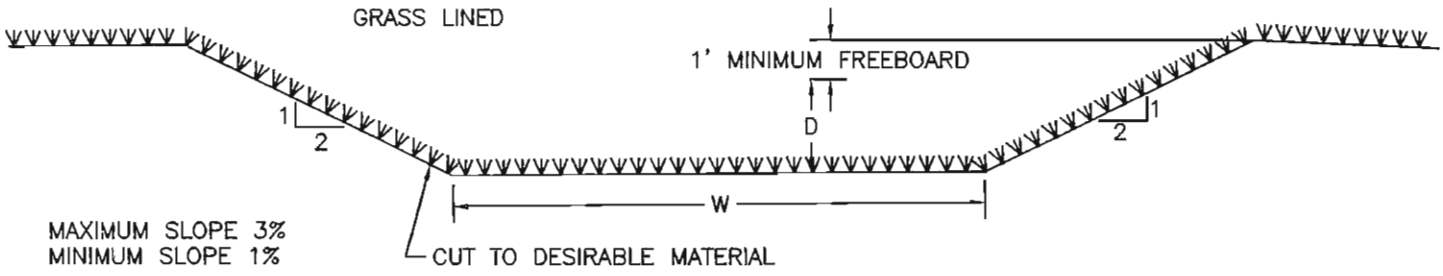

$Q = \frac{1.49}{N} A R^{2/3} S^{1/2}$

N(LOOSE STONE OR GRASS LINED) = 0.035

A = AREA

R = AREA/WETTED PERIMETER

S = SLOPE

* GRASS LINING: FESCUE, BERMUDA, RYE GRASS

DIVERSION CHANNEL DEPTH (D) FOR WIDTH (W) 8.0 FT.	
PEAK FLOW Q (CFS)	DEPTH D (FT)
1–15	0.5
15–50	1.0
50–100	1.5
100–180	2.0
180–270	2.5

DIVERSION CHANNEL DEPTH (D) FOR WIDTH (W) 10.0 FT.	
PEAK FLOW Q (CFS)	DEPTH D (FT)
0–15	0.5
15–60	1.0
60–120	1.5
120–210	2.0
210–320	2.5

DIVERSION CHANNEL DEPTH (D) FOR WIDTH (W) 12.0 FT.	
PEAK FLOW Q (CFS)	DEPTH D (FT)
0–20	0.5
20–70	1.0
70–150	1.5
150–250	2.0
250–383	2.5

DIVERSION CHANNEL DEPTH (D) FOR WIDTH (W) 15.0 FT.	
PEAK FLOW Q (CFS)	DEPTH D (FT)
0–20	0.5
20–90	1.0
90–180	1.5
180–300	2.0
300–450	2.5

PERC ENGINEERING CO., INC.
1908 Highway 78 West, Jasper, Alabama 35501
P.O. Box 1712, Jasper, Alabama 35502
(205) 221-5553 Office (205) 221-3114 Fax

TYPICAL PERMANENT DIVERSION FOR BASIN DISPOSAL

DRAWN BY: J.W.T. DWG. NAME: TYPICALS	DATE: 04–16–2009
APPROVED BY: L.G.S.	SCALE: NONE

V:\Eng105\Typicals\11-8-3\ 1.DWG 05/23/10 10:55

NOTES

1-2

1) Diversion Ditch 1-2 will be a 6-foot wide open channel (except from station 29+68 to 31+39 which will be 10' wide) with side slopes at 2.0H:1V or flatter with various linings. Diversion 1-2 will be lined with Bermuda grass from station 0+00 to station 26+73, from station 26+73 to station 29+68 will be lined with 16" thick of Class II sandstone or limestone rip-rap, and from station 29+68 to station 31+39 will be line with 16" Class II sandstone or limestone rip-rap with a shot-crete overlay.

2) Six inches of topsoil will be placed on all portions of the diversion ditch, where rock or spoil is exposed except where rip-rap is to be placed, in order to establish vegetative cover for the entire length.

3) A portion of Diversion 1-2 will consist of 6'x 3'x 60' reinforced concrete box culvert (PR3C2) to drain runoff under the road way of Primary Road 3P (Note: No rip-rap to be used in the location of PR3C2.).

3-4

1) Diversion Ditch 3-4 will be a 6-foot wide open channel with side slopes at 2.0H:1V or flatter with various linings. Diversion 3-4 will be lined with Bermuda grass from station 0+00 to station 16+59 and from station 16+59 to station 18+15 the diversion will be 8-foot wide and lined with 16" thick of Class II sandstone or limestone rip-rap.

2) Six inches of topsoil will be placed on all portions of the diversion ditch, where rock or spoil is exposed except where rip-rap is to be placed, in order to establish vegetative cover for the entire length.

3) Diversion 3-4 will drain into Diversion 5-6 as shown on the attached Watershed Map and Diversion Ditch Profile.

5-6

1) Diversion Ditch 5-6 will be a 11-foot wide open channel with side slopes at 2.0H:1V or flatter (except from station 19+11 to 19+76, this portion of Diversion 5-6 will consist of 6'x 3'x 65' reinforced concrete box culvert (PR4C1) to drain runoff under the road way of Primary Road 4P. *Note: No rip-rap to be used in the location of PR4C1.*). Diversion 5-6 will be lined 16" thick of Class II sandstone or limestone rip-rap from station 18+55 to station 19+11 and from station 19+76 to station 21+05 will be line with 16" Class II sandstone or limestone rip-rap with a shot-crete overlay.

2) Diversion Ditch 5-6 will taper down 6-foot wide at station 19+11 and taper out from 6-foot at station 19+76 to allow proper drainage through Drainage Structure PR4C1 which is to be located between these stations, under the roadway embankment of Primary Road 4P. The upstream and downstream slopes of the embankment will be lined with 16" of Class II sandstone or limestone rip-rap in the vicinity of Drainage Structure PR4C1.

RIP-RAP CLASSIFICATION SPECIFICATIONS

CLASS 1 RIP-RAP

No more than 10% of the stone will have a diameter greater than twelve (12) inches; no more than 50% of the stone will have a diameter less than ten (10) inches; and no more than 10% of the stone will have a diameter of less than six (6) inches. The thickness of the rip-rap liner will be no less than twelve (12) inches.

CLASS 2 RIP-RAP

No more than 10% of the stone will have a diameter greater than sixteen (16) inches; no more than 50% of the stone will have a diameter less than twelve (12) inches; and no more than 10% of the stone will have a diameter of less than six (6) inches. The thickness of the rip-rap liner will be no less than sixteen (16) inches.

CLASS 3 RIP-RAP

No more than 10% of the stone will have a diameter greater than twenty two (22) inches; no more than 50% of the stone will have a diameter less than sixteen (16) inches; and no more than 10% of the stone will have a diameter of less than eight (8) inches. The thickness of the rip-rap liner will be no less than twenty two (22) inches.

CLASS 4 RIP-RAP

No more than 10% of the stone will have a diameter greater than twenty seven (27) inches; no more than 50% of the stone will have a diameter less than twenty two (22) inches; and no more than 10% of the stone will have a diameter of less than ten (10) inches. The thickness of the rip-rap liner will be no less than twenty seven (27) inches.

CLASS 5 RIP-RAP

No more than 10% of the stone will have a diameter greater than thirty four (34) inches; no more than 50% of the stone will have a diameter less than twenty seven (27) inches; and no more than 10% of the stone will have a diameter of less than sixteen (16) inches. The thickness of the rip-rap liner will be no less than thirty four (34) inches.

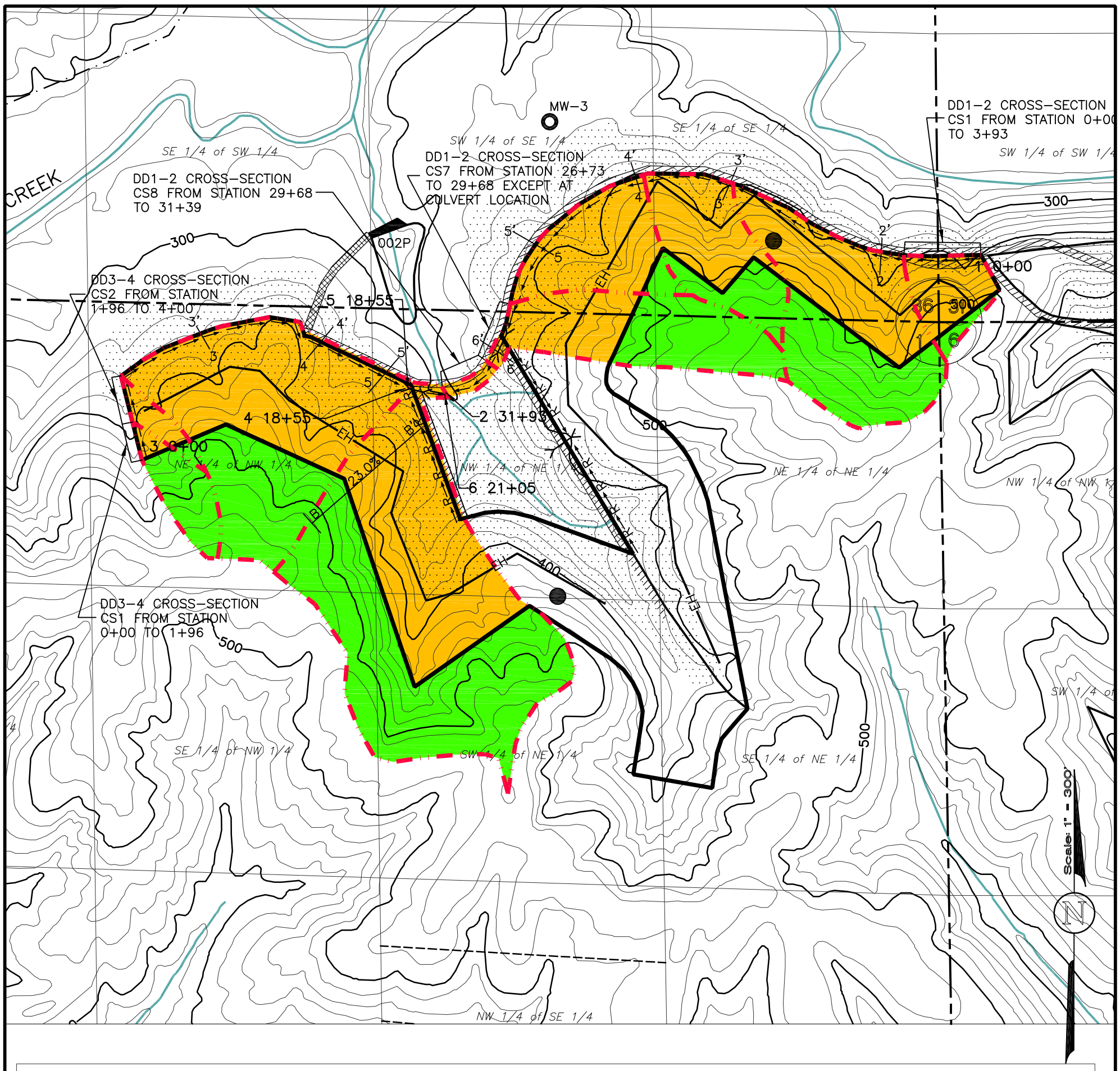

LEGEND

- Permit Boundary/Increment Boundary
- P-3742
- EH — Existing Highwall taken from Aerial Photo, 2009 Terrain Navigator Pro
- 600 — Surface Contour
- 001P — Sediment Basin
- Perennial Stream as per Cordova U.S.G.S. Quadrangle Map
- Intermittent Stream as per Cordova U.S.G.S. Quadrangle Map
- Property Line other than Forty Line
- Diversion Ditch/Berm
- Occupied Dwelling
- Unoccupied Dwelling (Barn, Shed, ect.)
- Public Road (Paved unless otherwise designated)
- Road (Private unless otherwise shown)
- Previously Surface Mined
- Primary Road
- Ancillary Roads
- Drainage Divide
- Railroad
- Power Transmission Line
- Coal Stockpile
- Known Extents Of Underground Mine
- R — Roadside Ditch

LAND USE INFORMATION

- Unmanaged Timberland, Curve Number 70
- Graded & Bare, Curve Number 81

PERC ENGINEERING CO., INC.
1606 Highway 78 West Jasper, Alabama 35501
P.O. Box 1712 Jasper, Alabama 35502
(205) 384-5553 Office (205) 296-3114 Fax

ATTACHMENT III-B-3
GUNNER-REILLY CORPORATION
CANE CREEK MINE
DIVERSION DITCH WATERSHED MAP

DRAWN BY:	J.W.T.	DATE:	02/08/2011
DWG. NAME:	DDWSM		
APPROVED BY:	L.G.S.	SCALE:	1" = 500'

X:\Eng105\Mines\GUNNER-REILLY\diversions\DDWSM.dwg 02/08/11 15:47

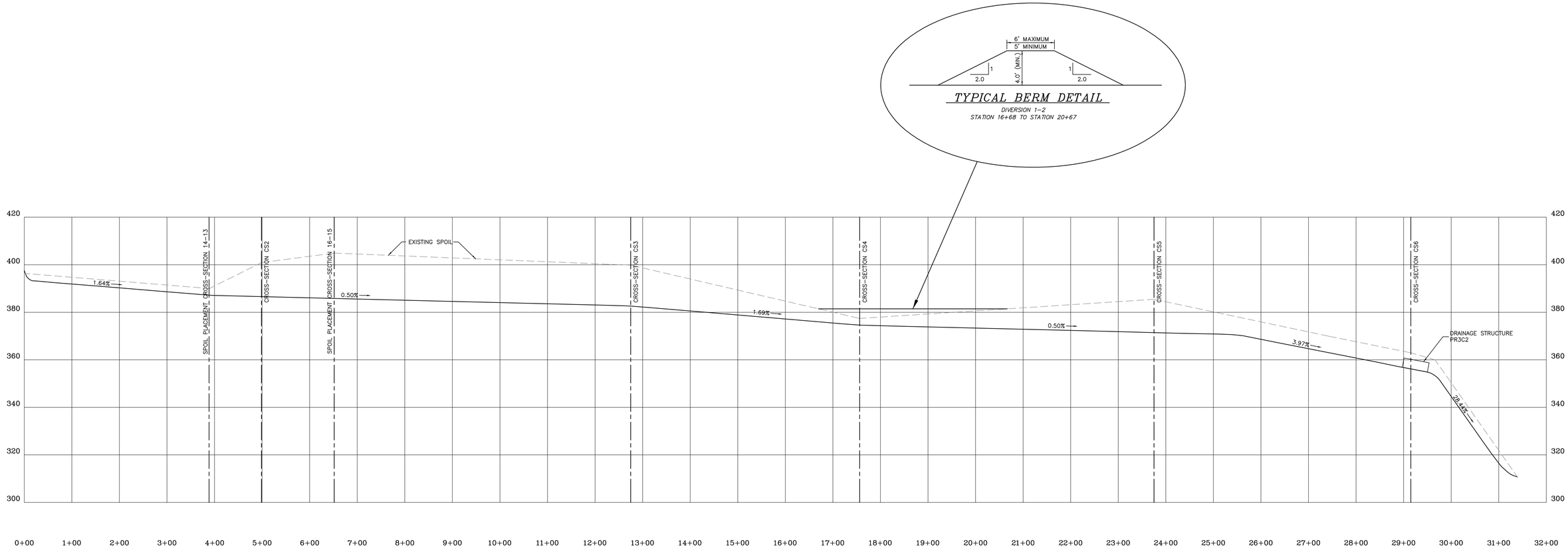

VERTICAL SCALE: 1" = 20'
HORIZONTAL SCALE: 1" = 100'

PERC
ENGINEERING CO., INC.
1606 Hwy. 78 West Jasper, AL 35501/P.O. Box 1712-35502
(205) 384-5553 Office (205) 295-3114 Fax

drawn by: J.W.T.
dwg name: DD1-2 PROFILE
scale: AS SHOWN
mathematical closure:
field survey: -

ATTACHEMENT III-B-3
GUNNER-REILLY CORPORATION
CANE CREEK MINE
P-3952
DIVERSION DITCH 1-2 PROFILE

LEGEND

EXISTING GRADE

PROPOSED FINISHED GRADE

DIVERSION DETAIL

DIVERSION 1–2
CROSS–SECTION 1 (0+00 to 3+93)

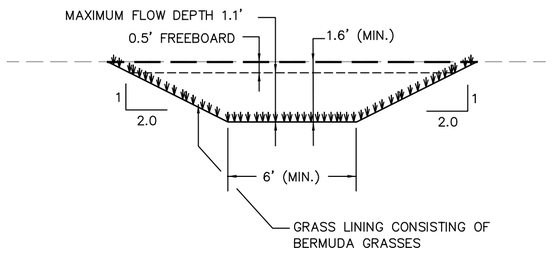

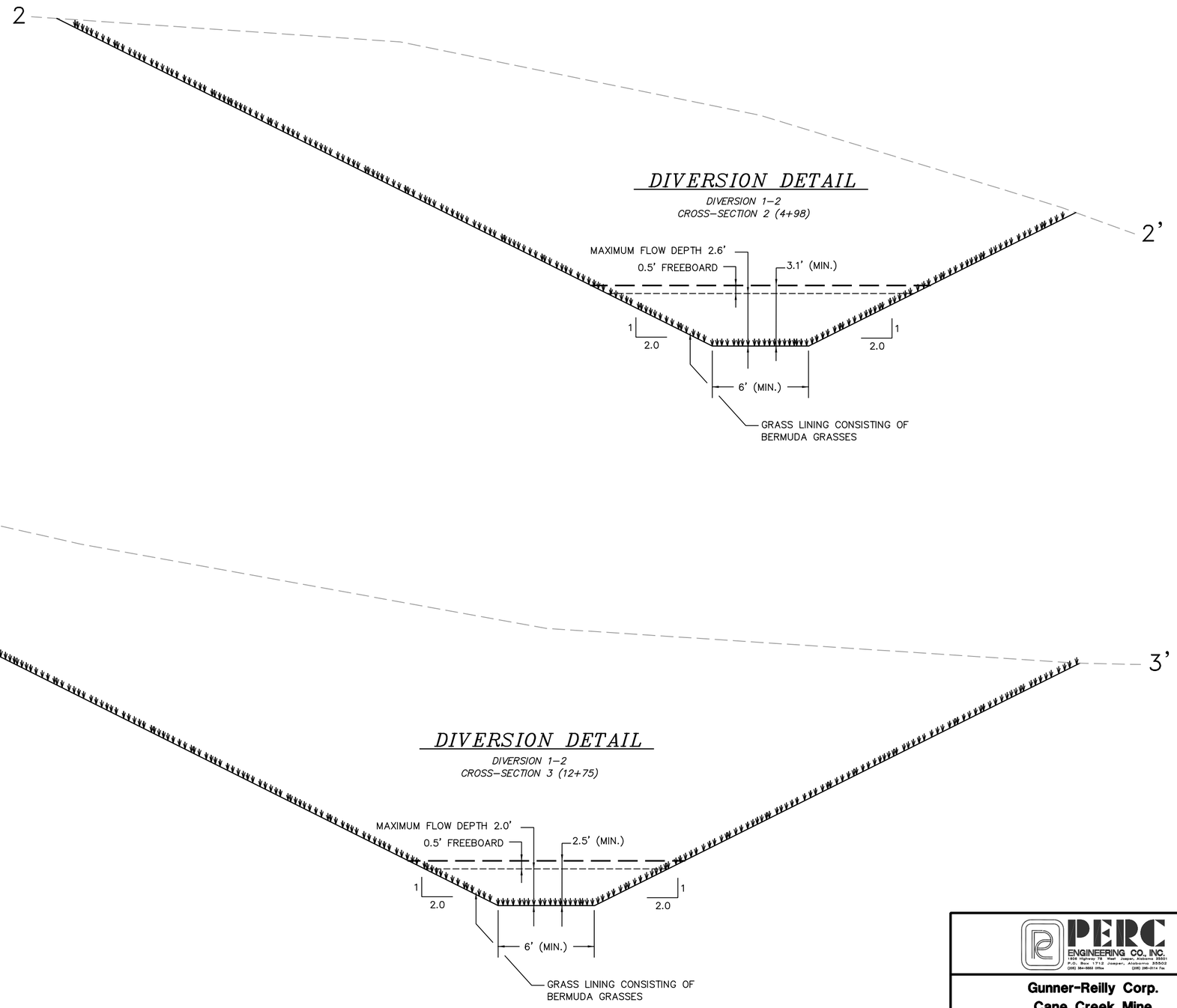

DIVERSION DETAIL

DIVERSION 1–2
CROSS–SECTION 2 (4+98)

DIVERSION DETAIL

DIVERSION 1–2
CROSS–SECTION 3 (12+75)

PERC ENGINEERING CO., INC.
1428 Highway 78, East Jasper, Alabama 35501
P.O. Box 1712 Jasper, Alabama 35502
(205) 384-5555 Office (205) 295-3114 Fax

Gunner-Reilly Corp.
Cane Creek Mine
P-3952
Diversion Ditch 1-2
Cross-Sections 1, 2 & 3

DRAWN BY: J.W.T. DWG. NAME: DD1–2 CS	DATE: 02/10/2011
APPROVED BY: L.G.S.	SCALE: 1" = 5'

J:\Eng100\Mines\GUNNER-REILY\Diversion\1-2\DD1-2 CS.dwg 09/23/11 11:10

LEGEND

EXISTING GRADE

PROPOSED FINISHED GRADE

DIVERSION DETAIL

DIVERSION 1–2
CROSS–SECTION 4 (17+56)

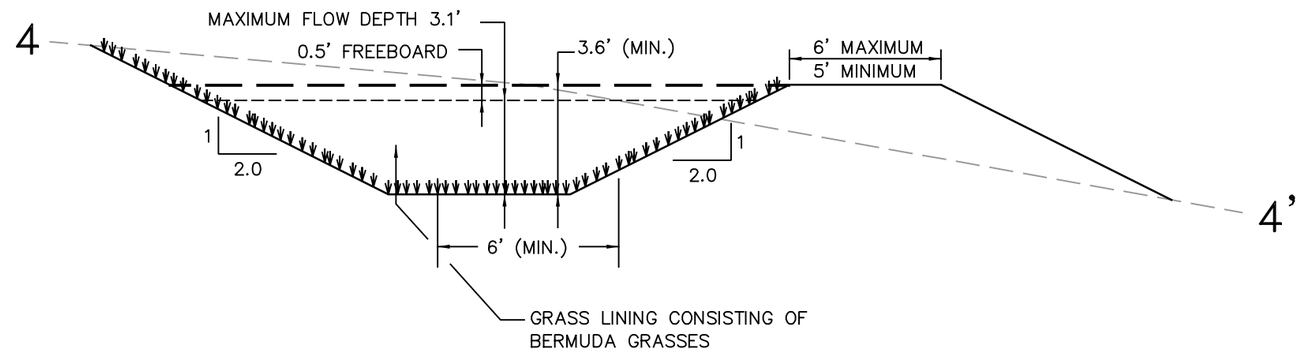

DIVERSION DETAIL

DIVERSION 1–2
CROSS–SECTION 5 (23+75)

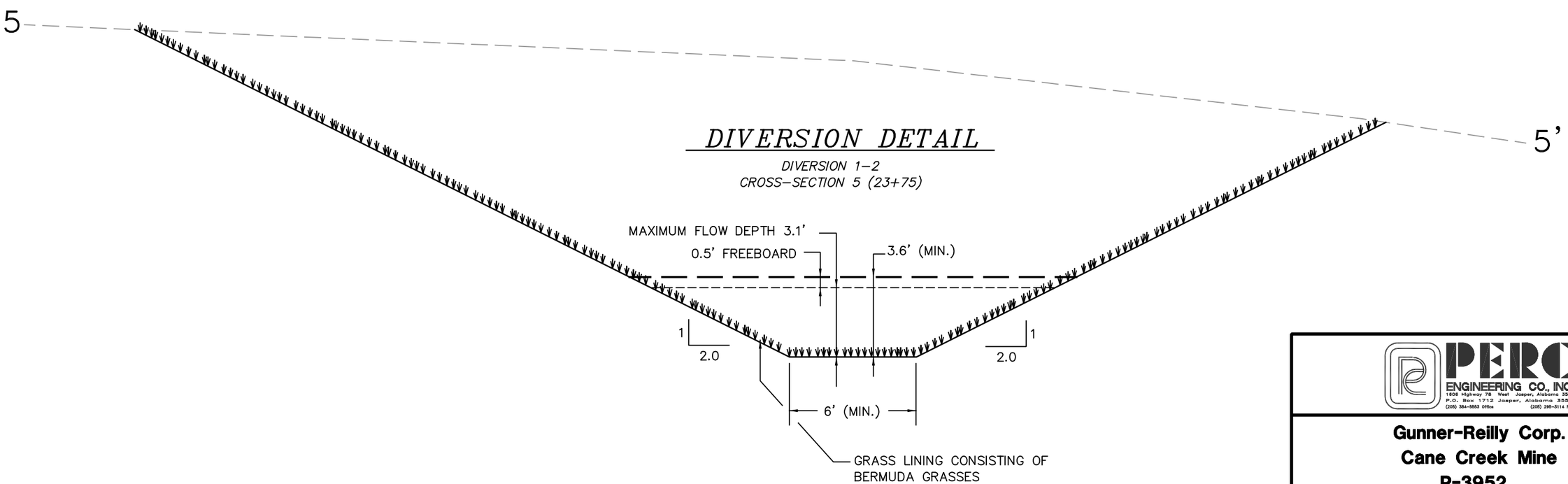

PERC ENGINEERING CO., INC.
1506 Highway 78 West Jasper, Alabama 35501
P.O. Box 1712 Jasper, Alabama 35502
(205) 384-5053 Office (205) 295-3114 Fax

Gunner-Reilly Corp.
Cane Creek Mine
P-3952
Diversion Ditch 1-2
Cross-Sections 4 & 5

DRAWN BY: J.W.T. DWG. NAME: DD1–2 CS	DATE: 02/10/2011
APPROVED BY: L.G.S.	SCALE: 1" = 5'

Y:\Eng105\Vimex\GUNNER-REILLY\diversions\1-2\DD1-2 CS.dwg 08/23/11 11:10

LEGEND

EXISTING GRADE

PROPOSED FINISHED GRADE

DIVERSION DETAIL

DIVERSION 1–2
CROSS–SECTION 6 (29+15)

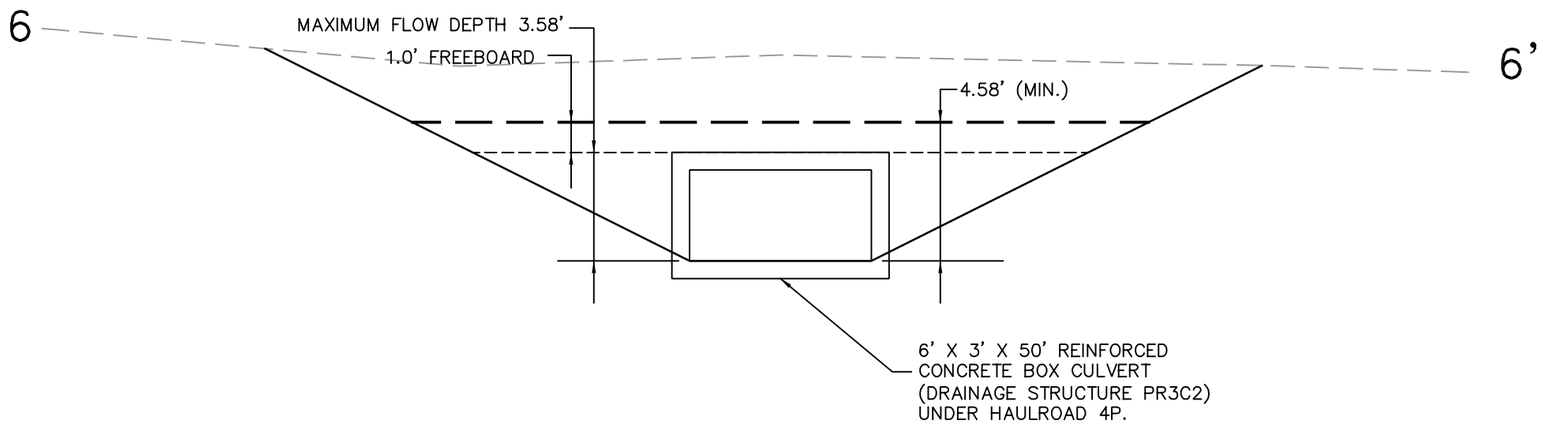

*NOTE: THE UPSTREAM INLET SLOPE WILL BE 7' WIDE LINED WITH 16" OF CLASS I SANDSTONE OR LIMESTONE RIP–RAP WITH A MINIMUM CHANNEL DEPTH OF 1.50' FROM THE SURFACE OF THE RIP–RAP LINING (STATION 26+73 TO 29+43). (SEE CROSS–SECTION 7.)

DIVERSION DETAIL

DIVERSION 1–2
CROSS–SECTION 7 (26+73 TO 29+68)
NOT TO SCALE

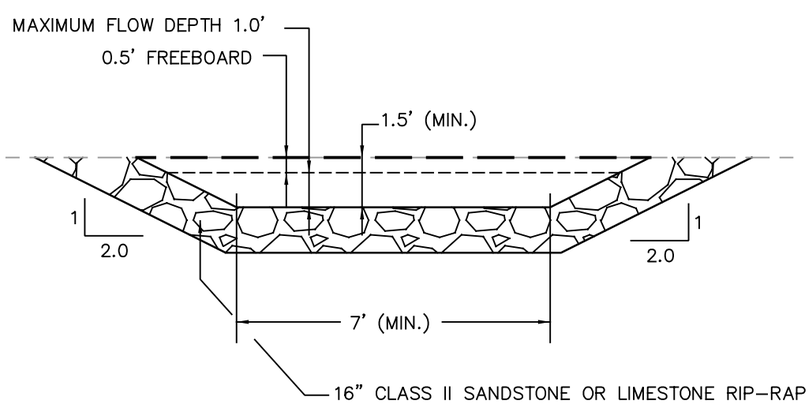

DIVERSION DETAIL

DIVERSION 1–2
CROSS–SECTION 8 (29+68 TO 31+39)
NOT TO SCALE

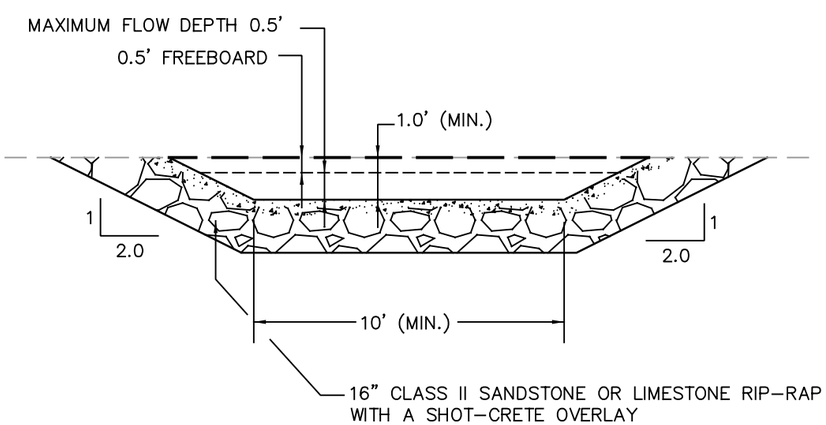

PERC ENGINEERING CO., INC.
1508 Highway 78 West Jasper, Alabama 35501
P.O. Box 1712 Jasper, Alabama 35502
(205) 384–5553 Office (205) 295–3114 Fax

Gunner-Reilly Corp.
Cane Creek Mine
P-3952
Diversion Ditch 1-2
Cross-Sections 6, 7 & 8

DRAWN BY: J.W.T. DWG. NAME: DD1–2 CS	DATE: 02/10/2011
APPROVED BY: L.G.S.	SCALE: 1" = 5'

V:\Eng1053\Mines\GUNNER-REILLY\diversions\1-2\DD1-2 CS.dwg 08/23/11 11:10

Copyright 1998 -2007 Pamela J. Schwab

Gunner-Reilly Corporation

Cane Creek Mine

P-3952

Diversion Ditch 1-2 (1.64%)

Station 0+00 to 3+93

4.3 Inch, 10 Year- 6 Hour

NRCS Type II

JWT

PERC Engineering Co., Inc.
PO BOX 1712
Jasper, AL 35503

Phone: 205-384-5553
Email: John.Taylor@percengineering.com

General Information

Storm Information:

Storm Type:	NRCS Type II
Design Storm:	10 yr - 6 hr
Rainfall Depth:	4.300 inches

Structure Networking:

Type	Stru #	(flows into)	Stru #	Musk. K (hrs)	Musk. X	Description
Channel	#1	==>	End	0.000	0.000	Diversion Ditch 1-2

#1
Chan'l

Structure Summary:

	Immediate Contributing Area (ac)	Total Contributing Area (ac)	Peak Discharge (cfs)	Total Runoff Volume (ac-ft)
#1	3.000	3.000	8.99	0.55

Structure Detail:

Structure #1 (Vegetated Channel)

Diversion Ditch 1-2

Trapezoidal Vegetated Channel Inputs:

Material: Bermuda grass

Bottom Width (ft)	Left Sideslope Ratio	Right Sideslope Ratio	Slope (%)	Retardance Classes	Freeboard Depth (ft)	Freeboard % of Depth	Freeboard Mult. x (VxD)	Limiting Velocity (fps)
6.00	2.0:1	2.0:1	1.6	D, B	0.50			8.0

Vegetated Channel Results:

	Stability Class D w/o Freeboard	Stability Class D w/ Freeboard	Capacity Class B w/o Freeboard	Capacity Class B w/ Freeboard
Design Discharge:	8.99 cfs		8.99 cfs	
Depth:	0.60 ft	1.10 ft	1.10 ft	1.60 ft
Top Width:	8.40 ft	10.40 ft	10.38 ft	12.38 ft
Velocity:	2.08 fps		1.00 fps	
X-Section Area:	4.33 sq ft		8.98 sq ft	
Hydraulic Radius:	0.498 ft		0.824 ft	
Froude Number:	0.51		0.19	
Roughness Coefficient:	0.0577		0.1673	

Subwatershed Hydrology Detail:

Stru #	SWS #	SWS Area (ac)	Time of Conc (hrs)	Musk K (hrs)	Musk X	Curve Number	UHS	Peak Discharge (cfs)	Runoff Volume (ac-ft)
#1	1	0.400	0.084	0.110	0.406	70.000	M	1.04	0.051
	2	2.600	0.127	0.000	0.000	81.000	F	8.03	0.496
	Σ	**3.000**						**8.99**	**0.547**

Subwatershed Time of Concentration Details:

Stru #	SWS #	Land Flow Condition	Slope (%)	Vert. Dist. (ft)	Horiz. Dist. (ft)	Velocity (fps)	Time (hrs)
#1	1	1. Forest with heavy ground litter	7.50	15.00	199.99	0.690	0.080
		8. Large gullies, diversions, and low flowing streams	26.02	70.00	269.00	15.300	0.004
#1	**1**	**Time of Concentration:**					**0.084**
#1	2	5. Nearly bare and untilled, and alluvial valley fans	15.00	30.00	199.99	3.870	0.014
		8. Large gullies, diversions, and low flowing streams	5.62	163.00	2,900.00	7.110	0.113
#1	**2**	**Time of Concentration:**					**0.127**

Subwatershed Muskingum Routing Details:

Stru #	SWS #	Land Flow Condition	Slope (%)	Vert. Dist. (ft)	Horiz. Dist. (ft)	Velocity (fps)	Time (hrs)
#1	1	8. Large gullies, diversions, and low flowing streams	5.97	173.00	2,900.00	7.320	0.110
#1	**1**	**Muskingum K:**					**0.110**

Copyright 1998 -2007 Pamela J. Schwab

Gunner-Reilly Corporation

Cane Creek Mine

P-3952

Diversion Ditch 1-2 (0.50%)

Station 3+93 to 12+72

4.3 Inch, 10 Year- 6 Hour

NRCS Type II

JWT

PERC Engineering Co., Inc.
PO BOX 1712
Jasper, AL 35503

Phone: 205-384-5553
Email: John.Taylor@percengineering.com

General Information

Storm Information:

Storm Type:	NRCS Type II
Design Storm:	10 yr - 6 hr
Rainfall Depth:	4.300 inches

Structure Networking:

Type	Stru #	(flows into)	Stru #	Musk. K (hrs)	Musk. X	Description
Channel	#1	==>	End	0.000	0.000	Diversion Ditch 1-2

#1
Chan'l

Structure Summary:

	Immediate Contributing Area (ac)	Total Contributing Area (ac)	Peak Discharge (cfs)	Total Runoff Volume (ac-ft)
#1	16.300	16.300	45.84	2.69

Structure Detail:

Structure #1 (Vegetated Channel)

Diversion Ditch 1-2

Trapezoidal Vegetated Channel Inputs:

Material: Bermuda grass

Bottom Width (ft)	Left Sideslope Ratio	Right Sideslope Ratio	Slope (%)	Retardance Classes	Freeboard Depth (ft)	Freeboard % of Depth	Freeboard Mult. x (VxD)	Limiting Velocity (fps)
6.00	2.0:1	2.0:1	0.5	D, B	0.50			8.0

Vegetated Channel Results:

	Stability Class D w/o Freeboard	Stability Class D w/ Freeboard	Capacity Class B w/o Freeboard	Capacity Class B w/ Freeboard
Design Discharge:	45.84 cfs		45.84 cfs	
Depth:	1.68 ft	2.18 ft	2.56 ft	3.06 ft
Top Width:	12.74 ft	14.74 ft	16.26 ft	18.26 ft
Velocity:	2.91 fps		1.61 fps	
X-Section Area:	15.78 sq ft		28.55 sq ft	
Hydraulic Radius:	1.166 ft		1.634 ft	
Froude Number:	0.46		0.21	
Roughness Coefficient:	0.0402		0.0910	

Subwatershed Hydrology Detail:

Stru #	SWS #	SWS Area (ac)	Time of Conc (hrs)	Musk K (hrs)	Musk X	Curve Number	UHS	Peak Discharge (cfs)	Runoff Volume (ac-ft)
#1	1	6.600	0.084	0.110	0.406	70.000	M	17.18	0.840
	2	9.700	0.127	0.000	0.000	81.000	F	29.96	1.850
	Σ	**16.300**						**45.84**	**2.690**

Subwatershed Time of Concentration Details:

Stru #	SWS #	Land Flow Condition	Slope (%)	Vert. Dist. (ft)	Horiz. Dist. (ft)	Velocity (fps)	Time (hrs)
#1	1	1. Forest with heavy ground litter	7.50	15.00	199.99	0.690	0.080
		8. Large gullies, diversions, and low flowing streams	26.02	70.00	269.00	15.300	0.004
#1	**1**	**Time of Concentration:**					**0.084**
#1	2	5. Nearly bare and untilled, and alluvial valley fans	15.00	30.00	199.99	3.870	0.014
		8. Large gullies, diversions, and low flowing streams	5.62	163.00	2,900.00	7.110	0.113
#1	**2**	**Time of Concentration:**					**0.127**

Subwatershed Muskingum Routing Details:

Stru #	SWS #	Land Flow Condition	Slope (%)	Vert. Dist. (ft)	Horiz. Dist. (ft)	Velocity (fps)	Time (hrs)
#1	1	8. Large gullies, diversions, and low flowing streams	5.97	173.00	2,900.00	7.320	0.110
#1	**1**	**Muskingum K:**					**0.110**

Copyright 1998 -2007 Pamela J. Schwab

Gunner-Reilly Corporation

Cane Creek Mine

P-3952

Diversion Ditch 1-2 (1.69%)

Station 12+72 to 17+55

4.3 Inch, 10 Year- 6 Hour

NRCS Type II

JWT

PERC Engineering Co., Inc.
PO BOX 1712
Jasper, AL 35503

Phone: 205-384-5553
Email: John.Taylor@percengineering.com

General Information

Storm Information:

Storm Type:	NRCS Type II
Design Storm:	10 yr - 6 hr
Rainfall Depth:	4.300 inches

Structure Networking:

Type	Stru #	(flows into)	Stru #	Musk. K (hrs)	Musk. X	Description
Channel	#1	==>	End	0.000	0.000	Diversion Ditch 1-2

#1
Chan'l

Structure Summary:

	Immediate Contributing Area (ac)	Total Contributing Area (ac)	Peak Discharge (cfs)	Total Runoff Volume (ac-ft)
#1	23.000	23.000	65.03	3.83

Structure Detail:

Structure #1 (Vegetated Channel)

Diversion Ditch 1-2

Trapezoidal Vegetated Channel Inputs:

Material: Bermuda grass

Bottom Width (ft)	Left Sideslope Ratio	Right Sideslope Ratio	Slope (%)	Retardance Classes	Freeboard Depth (ft)	Freeboard % of Depth	Freeboard Mult. x (VxD)	Limiting Velocity (fps)
6.00	2.0:1	2.0:1	1.7	D, B	0.50			8.0

Vegetated Channel Results:

	Stability Class D w/o Freeboard	Stability Class D w/ Freeboard	Capacity Class B w/o Freeboard	Capacity Class B w/ Freeboard
Design Discharge:	65.03 cfs		65.03 cfs	
Depth:	1.36 ft	1.86 ft	1.96 ft	2.46 ft
Top Width:	11.44 ft	13.44 ft	13.82 ft	15.82 ft
Velocity:	5.48 fps		3.36 fps	
X-Section Area:	11.86 sq ft		19.37 sq ft	
Hydraulic Radius:	0.982 ft		1.314 ft	
Froude Number:	0.95		0.50	
Roughness Coefficient:	0.0349		0.0692	

Subwatershed Hydrology Detail:

Stru #	SWS #	SWS Area (ac)	Time of Conc (hrs)	Musk K (hrs)	Musk X	Curve Number	UHS	Peak Discharge (cfs)	Runoff Volume (ac-ft)
#1	1	8.800	0.084	0.110	0.406	70.000	M	22.91	1.120
	2	14.200	0.127	0.000	0.000	81.000	F	43.86	2.709
	Σ	**23.000**						**65.03**	**3.829**

Subwatershed Time of Concentration Details:

Stru #	SWS #	Land Flow Condition	Slope (%)	Vert. Dist. (ft)	Horiz. Dist. (ft)	Velocity (fps)	Time (hrs)
#1	1	1. Forest with heavy ground litter	7.50	15.00	199.99	0.690	0.080
		8. Large gullies, diversions, and low flowing streams	26.02	70.00	269.00	15.300	0.004
#1	**1**	**Time of Concentration:**					**0.084**
#1	2	5. Nearly bare and untilled, and alluvial valley fans	15.00	30.00	199.99	3.870	0.014
		8. Large gullies, diversions, and low flowing streams	5.62	163.00	2,900.00	7.110	0.113
#1	**2**	**Time of Concentration:**					**0.127**

Subwatershed Muskingum Routing Details:

Stru #	SWS #	Land Flow Condition	Slope (%)	Vert. Dist. (ft)	Horiz. Dist. (ft)	Velocity (fps)	Time (hrs)
#1	1	8. Large gullies, diversions, and low flowing streams	5.97	173.00	2,900.00	7.320	0.110
#1	**1**	**Muskingum K:**					**0.110**

Gunner-Reilly Corporation
Cane Creek Mine
P-3952
Diversion Ditch 1-2 (0.50%)
Station 17+55 to 26+73

4.3 Inch, 10 Year- 6 Hour

NRCS Type II

JWT

PERC Engineering Co., Inc.
PO BOX 1712
Jasper, AL 35503

Phone: 205-384-5553
Email: John.Taylor@percengineering.com

General Information

Storm Information:

Storm Type:	NRCS Type II
Design Storm:	10 yr - 6 hr
Rainfall Depth:	4.300 inches

Structure Networking:

Type	Stru #	(flows into)	Stru #	Musk. K (hrs)	Musk. X	Description
Channel	#1	==>	End	0.000	0.000	Diversion Ditch 1-2

#1
Chan'l

Structure Summary:

	Immediate Contributing Area (ac)	Total Contributing Area (ac)	Peak Discharge (cfs)	Total Runoff Volume (ac-ft)
#1	29.200	29.200	83.84	4.98

Structure Detail:

Structure #1 (Vegetated Channel)

Diversion Ditch 1-2

Trapezoidal Vegetated Channel Inputs:

Material: Bermuda grass

Bottom Width (ft)	Left Sideslope Ratio	Right Sideslope Ratio	Slope (%)	Retardance Classes	Freeboard Depth (ft)	Freeboard % of Depth	Freeboard Mult. x (VxD)	Limiting Velocity (fps)
6.00	2.0:1	2.0:1	0.5	D, B	0.50			8.0

Vegetated Channel Results:

	Stability Class D w/o Freeboard	Stability Class D w/ Freeboard	Capacity Class B w/o Freeboard	Capacity Class B w/ Freeboard
Design Discharge:	83.84 cfs		83.84 cfs	
Depth:	2.14 ft	2.64 ft	3.05 ft	3.55 ft
Top Width:	14.57 ft	16.57 ft	18.18 ft	20.18 ft
Velocity:	3.81 fps		2.28 fps	
X-Section Area:	22.03 sq ft		36.83 sq ft	
Hydraulic Radius:	1.414 ft		1.877 ft	
Froude Number:	0.55		0.28	
Roughness Coefficient:	0.0349		0.0704	

Subwatershed Hydrology Detail:

Stru #	SWS #	SWS Area (ac)	Time of Conc (hrs)	Musk K (hrs)	Musk X	Curve Number	UHS	Peak Discharge (cfs)	Runoff Volume (ac-ft)
#1	1	9.300	0.084	0.110	0.406	70.000	M	24.21	1.183
	2	19.900	0.127	0.000	0.000	81.000	F	61.47	3.796
	Σ	**29.200**						**83.84**	**4.980**

Subwatershed Time of Concentration Details:

Stru #	SWS #	Land Flow Condition	Slope (%)	Vert. Dist. (ft)	Horiz. Dist. (ft)	Velocity (fps)	Time (hrs)
#1	1	1. Forest with heavy ground litter	7.50	15.00	199.99	0.690	0.080
		8. Large gullies, diversions, and low flowing streams	26.02	70.00	269.00	15.300	0.004
#1	**1**	**Time of Concentration:**					**0.084**
#1	2	5. Nearly bare and untilled, and alluvial valley fans	15.00	30.00	199.99	3.870	0.014
		8. Large gullies, diversions, and low flowing streams	5.62	163.00	2,900.00	7.110	0.113
#1	**2**	**Time of Concentration:**					**0.127**

Subwatershed Muskingum Routing Details:

Stru #	SWS #	Land Flow Condition	Slope (%)	Vert. Dist. (ft)	Horiz. Dist. (ft)	Velocity (fps)	Time (hrs)
#1	1	8. Large gullies, diversions, and low flowing streams	5.97	173.00	2,900.00	7.320	0.110
#1	**1**	**Muskingum K:**					**0.110**

Copyright 1998 -2007 Pamela J. Schwab

Gunner-Reilly Corporation
Cane Creek Mine
P-3952
Diversion Ditch 1-2 (3.97%)
Station 26+73 to 29+68

4.3 Inch, 10 Year- 6 Hour

NRCS Type II

JWT

PERC Engineering Co., Inc.
PO BOX 1712
Jasper, AL 35503

Phone: 205-384-5553
Email: John.Taylor@percengineering.com

General Information

Storm Information:

Storm Type:	NRCS Type II
Design Storm:	10 yr - 6 hr
Rainfall Depth:	4.300 inches

Structure Networking:

Type	Stru #	(flows into)	Stru #	Musk. K (hrs)	Musk. X	Description
Channel	#1	==>	End	0.000	0.000	Diversion Ditch 1-2

#1
Chan'l

Structure Summary:

	Immediate Contributing Area (ac)	Total Contributing Area (ac)	Peak Discharge (cfs)	Total Runoff Volume (ac-ft)
#1	38.100	38.100	107.91	6.36

Structure Detail:

Structure #1 (Riprap Channel)

Diversion Ditch 1-2

Trapezoidal Riprap Channel Inputs:

Material: Riprap

Bottom Width (ft)	Left Sideslope Ratio	Right Sideslope Ratio	Slope (%)	Freeboard Depth (ft)	Freeboard % of Depth	Freeboard Mult. x (VxD)
7.00	2.0:1	2.0:1	4.0	0.50		

Riprap Channel Results:

Simons/OSM Method - Steep Slope Design

	w/o Freeboard	w/ Freeboard
Design Discharge:	107.91 cfs	
Depth:	1.00 ft	1.50 ft
Top Width:	11.00 ft	13.00 ft
Velocity*:		
X-Section Area:	8.99 sq ft	
Hydraulic Radius:	0.784 ft	
Froude Number*:		
Manning's n*:		
Dmin:	4.00 in	
D50:	12.00 in	
Dmax:	15.00 in	

Velocity and Manning's n calculations may not apply for this method.

Subwatershed Hydrology Detail:

Stru #	SWS #	SWS Area (ac)	Time of Conc (hrs)	Musk K (hrs)	Musk X	Curve Number	UHS	Peak Discharge (cfs)	Runoff Volume (ac-ft)
#1	1	14.300	0.084	0.110	0.406	70.000	M	37.22	1.820
	2	23.800	0.127	0.000	0.000	81.000	F	73.52	4.540
	Σ	**38.100**						**107.91**	**6.360**

Subwatershed Time of Concentration Details:

Stru #	SWS #	Land Flow Condition	Slope (%)	Vert. Dist. (ft)	Horiz. Dist. (ft)	Velocity (fps)	Time (hrs)
#1	1	1. Forest with heavy ground litter	7.50	15.00	199.99	0.690	0.080
		8. Large gullies, diversions, and low flowing streams	26.02	70.00	269.00	15.300	0.004
#1	**1**	**Time of Concentration:**					**0.084**
#1	2	5. Nearly bare and untilled, and alluvial valley fans	15.00	30.00	199.99	3.870	0.014
		8. Large gullies, diversions, and low flowing streams	5.62	163.00	2,900.00	7.110	0.113
#1	**2**	**Time of Concentration:**					**0.127**

Subwatershed Muskingum Routing Details:

Stru #	SWS #	Land Flow Condition	Slope (%)	Vert. Dist. (ft)	Horiz. Dist. (ft)	Velocity (fps)	Time (hrs)
#1	1	8. Large gullies, diversions, and low flowing streams	5.97	173.00	2,900.00	7.320	0.110
#1	**1**	**Muskingum K:**					**0.110**

CURRENT DATE: 03-04-2011 FILE DATE: 03-04-2011
CURRENT TIME: 09:10:15 FILE NAME: CCHR3C2

FHWA CULVERT ANALYSIS
HY-8, VERSION 6.2

CULV NO.	SITE DATA: INLET ELEV. (ft)	OUTLET ELEV. (ft)	CULVERT LENGTH (ft)	CULVERT SHAPE, MATERIAL, INLET: BARRELS SHAPE MATERIAL	SPAN (ft)	RISE (ft)	MANNING n	INLET TYPE
1	356.84	354.84	50.04	1 RCB	6.00	3.00	.016	CONVENTIONAL
2								
3								
4								
5								
6								

SUMMARY OF CULVERT FLOWS (cfs) FILE: CCHR3C2 DATE: 03-04-2011

ELEV (ft)	TOTAL	1	2	3	4	5	6	ROADWAY	ITR
356.84	0.0	0.0	0.0	0.0	0.0	0.0	0.0	0.00	1
357.67	12.0	12.0	0.0	0.0	0.0	0.0	0.0	0.00	1
358.15	24.0	24.0	0.0	0.0	0.0	0.0	0.0	0.00	1
358.55	36.0	36.0	0.0	0.0	0.0	0.0	0.0	0.00	1
358.91	48.0	48.0	0.0	0.0	0.0	0.0	0.0	0.00	1
359.25	60.0	60.0	0.0	0.0	0.0	0.0	0.0	0.00	1
359.57	72.0	72.0	0.0	0.0	0.0	0.0	0.0	0.00	1
359.89	84.0	84.0	0.0	0.0	0.0	0.0	0.0	0.00	1
360.21	96.0	96.0	0.0	0.0	0.0	0.0	0.0	0.00	1
360.54	107.8	107.8	0.0	0.0	0.0	0.0	0.0	0.00	1
360.90	120.0	120.0	0.0	0.0	0.0	0.0	0.0	0.00	1
362.15	156.1	156.1	0.0	0.0	0.0	0.0	0.0	OVERTOPPING	

SUMMARY OF ITERATIVE SOLUTION ERRORS FILE: CCHR3C2 DATE: 03-04-2011

HEAD ELEV (ft)	HEAD ERROR (ft)	TOTAL FLOW (cfs)	FLOW ERROR (cfs)	% FLOW ERROR
356.84	0.000	0.00	0.00	0.00
357.67	0.000	12.00	0.00	0.00
358.15	0.000	24.00	0.00	0.00
358.55	0.000	36.00	0.00	0.00
358.91	0.000	48.00	0.00	0.00
359.25	0.000	60.00	0.00	0.00
359.57	0.000	72.00	0.00	0.00
359.89	0.000	84.00	0.00	0.00
360.21	0.000	96.00	0.00	0.00
360.54	0.000	107.80	0.00	0.00
360.90	0.000	120.00	0.00	0.00

<1> TOLERANCE (ft) = 0.010 <2> TOLERANCE (%) = 1.000

CURRENT DATE: 03-04-2011 FILE DATE: 03-04-2011
CURRENT TIME: 09:10:15 FILE NAME: CCHR3C2

PERFORMANCE CURVE FOR CULVERT 1 - 1(6.00 (ft) BY 3.00 (ft)) RCB

DIS-CHARGE FLOW (cfs)	HEAD-WATER ELEV. (ft)	INLET CONTROL DEPTH (ft)	OUTLET CONTROL DEPTH (ft)	FLOW TYPE <F4>	NORMAL DEPTH (ft)	CRIT. DEPTH (ft)	OUTLET DEPTH (ft)	TW DEPTH (ft)	OUTLET VEL. (fps)	TW VEL. (fps)
0.00	356.84	0.00	0.00	0-NF	0.00	0.00	0.00	1.00	0.00	0.00
12.00	357.67	0.83	0.83	1-S2n	0.26	0.50	0.26	1.00	7.69	0.00
24.00	358.15	1.31	1.31	1-S2n	0.41	0.79	0.41	1.00	9.67	0.00
36.00	358.55	1.71	1.71	1-S2n	0.53	1.04	0.57	1.00	10.59	0.00
48.00	358.91	2.07	2.07	1-S2n	0.65	1.26	0.70	1.00	11.48	0.00
60.00	359.25	2.41	2.41	1-S2n	0.75	1.46	0.82	1.00	12.18	0.00
72.00	359.57	2.73	2.73	1-S2n	0.85	1.65	0.94	1.00	12.75	0.00
84.00	359.89	3.05	3.05	5-S2n	0.94	1.83	1.06	1.00	13.19	0.00
96.00	360.21	3.37	0.00	5-S2n	1.02	2.00	1.18	1.00	13.62	0.00
107.80	360.54	3.70	0.00	5-S2n	1.11	2.16	1.29	1.00	13.96	0.00
120.00	360.90	4.06	0.00	5-S2n	1.19	2.32	1.40	1.00	14.31	0.00

El. inlet face invert 356.84 ft El. outlet invert 354.84 ft
El. inlet throat invert 0.00 ft El. inlet crest 0.00 ft

***** SITE DATA ***** CULVERT INVERT **********

INLET STATION	0.00 ft
INLET ELEVATION	356.84 ft
OUTLET STATION	50.00 ft
OUTLET ELEVATION	354.84 ft
NUMBER OF BARRELS	1
SLOPE (V/H)	0.0400
CULVERT LENGTH ALONG SLOPE	50.04 ft

***** CULVERT DATA SUMMARY **********

BARREL SHAPE	BOX
BARREL SPAN	6.00 ft
BARREL RISE	3.00 ft
BARREL MATERIAL	CONCRETE
BARREL MANNING'S n	0.016
INLET TYPE	CONVENTIONAL
INLET EDGE AND WALL	SQUARE EDGE (90 DEG.)
INLET DEPRESSION	NONE

CURRENT DATE: 03-04-2011 FILE DATE: 03-04-2011
CURRENT TIME: 09:10:15 FILE NAME: CCHR3C2

ÄÄ
ÄÄÄÄÄÄÄÄÄÄÄÄÄÄÄÄÄÄÄÄÄÄÄÄÄÄ TAILWATER ÄÄÄÄÄÄÄÄÄÄÄÄÄÄÄÄÄÄÄÄÄÄÄÄÄÄ
ÄÄ
ÄÄ

CONSTANT WATER SURFACE ELEVATION
355.84

ÄÄ
ÄÄÄÄÄÄÄÄÄÄÄÄÄÄÄÄÄÄÄÄÄÄÄÄÄÄ ROADWAY OVERTOPPING DATA ÄÄÄÄÄÄÄÄÄÄÄÄÄÄÄÄÄÄÄÄÄÄÄÄÄÄ
ÄÄ

ROADWAY SURFACE	GRAVEL
EMBANKMENT TOP WIDTH	25.00 ft
CREST LENGTH	25.00 ft
OVERTOPPING CREST ELEVATION	362.15 ft

ÄÄ
□

Gunner-Reilly Corporation

Cane Creek Mine

P-3952

Diversion Ditch 1-2 (28.44%)

Station 29+68 to 31+39

4.3 Inch, 10 Year- 6 Hour

NRCS Type II

JWT

PERC Engineering Co., Inc.
PO BOX 1712
Jasper, AL 35503

Phone: 205-384-5553
Email: John.Taylor@percengineering.com

General Information

Storm Information:

Storm Type:	NRCS Type II
Design Storm:	10 yr - 6 hr
Rainfall Depth:	4.300 inches

Structure Networking:

Type	Stru #	(flows into)	Stru #	Musk. K (hrs)	Musk. X	Description
Channel	#1	==>	End	0.000	0.000	Diversion Ditch 1-2

#1
Chan'l

Structure Summary:

	Immediate Contributing Area (ac)	Total Contributing Area (ac)	Peak Discharge (cfs)	Total Runoff Volume (ac-ft)
#1	38.500	38.500	109.15	6.44

Structure Detail:

Structure #1 (Nonerodible Channel)

Diversion Ditch 1-2

Trapezoidal Nonerodible Channel Inputs:

Material: Concrete, Rubble

Bottom Width (ft)	Left Sideslope Ratio	Right Sideslope Ratio	Slope (%)	Manning's n	Freeboard Depth (ft)	Freeboard % of Depth	Freeboard Mult. x (VxD)
10.00	2.0:1	2.0:1	28.4	0.0220	0.50		

Nonerodible Channel Results:

	w/o Freeboard	w/ Freeboard
Design Discharge:	109.15 cfs	
Depth:	0.48 ft	0.98 ft
Top Width:	11.92 ft	13.92 ft
Velocity:	20.70 fps	
X-Section Area:	5.27 sq ft	
Hydraulic Radius:	0.434 ft	
Froude Number:	5.49	

Subwatershed Hydrology Detail:

Stru #	SWS #	SWS Area (ac)	Time of Conc (hrs)	Musk K (hrs)	Musk X	Curve Number	UHS	Peak Discharge (cfs)	Runoff Volume (ac-ft)
#1	1	14.300	0.084	0.110	0.406	70.000	M	37.22	1.820
	2	24.200	0.127	0.000	0.000	81.000	F	74.76	4.617
	Σ	**38.500**						**109.15**	**6.436**

Subwatershed Time of Concentration Details:

Stru #	SWS #	Land Flow Condition	Slope (%)	Vert. Dist. (ft)	Horiz. Dist. (ft)	Velocity (fps)	Time (hrs)
#1	1	1. Forest with heavy ground litter	7.50	15.00	199.99	0.690	0.080
		8. Large gullies, diversions, and low flowing streams	26.02	70.00	269.00	15.300	0.004
#1	**1**	**Time of Concentration:**					**0.084**
#1	2	5. Nearly bare and untilled, and alluvial valley fans	15.00	30.00	199.99	3.870	0.014
		8. Large gullies, diversions, and low flowing streams	5.62	163.00	2,900.00	7.110	0.113
#1	**2**	**Time of Concentration:**					**0.127**

Subwatershed Muskingum Routing Details:

Stru #	SWS #	Land Flow Condition	Slope (%)	Vert. Dist. (ft)	Horiz. Dist. (ft)	Velocity (fps)	Time (hrs)
#1	1	8. Large gullies, diversions, and low flowing streams	5.97	173.00	2,900.00	7.320	0.110
#1	**1**	**Muskingum K:**					**0.110**

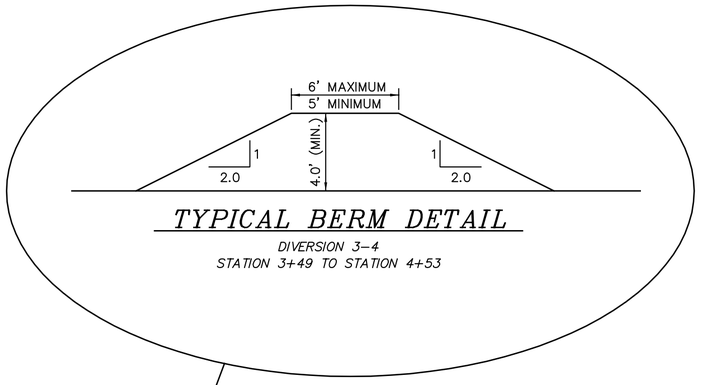

TYPICAL BERM DETAIL

DIVERSION 3–4
STATION 3+49 TO STATION 4+53

LEGEND

- EXISTING GRADE
- PROPOSED FINISHED GRADE
- END DIVERSION 3–4; BEGINING DIVERSION 5–6

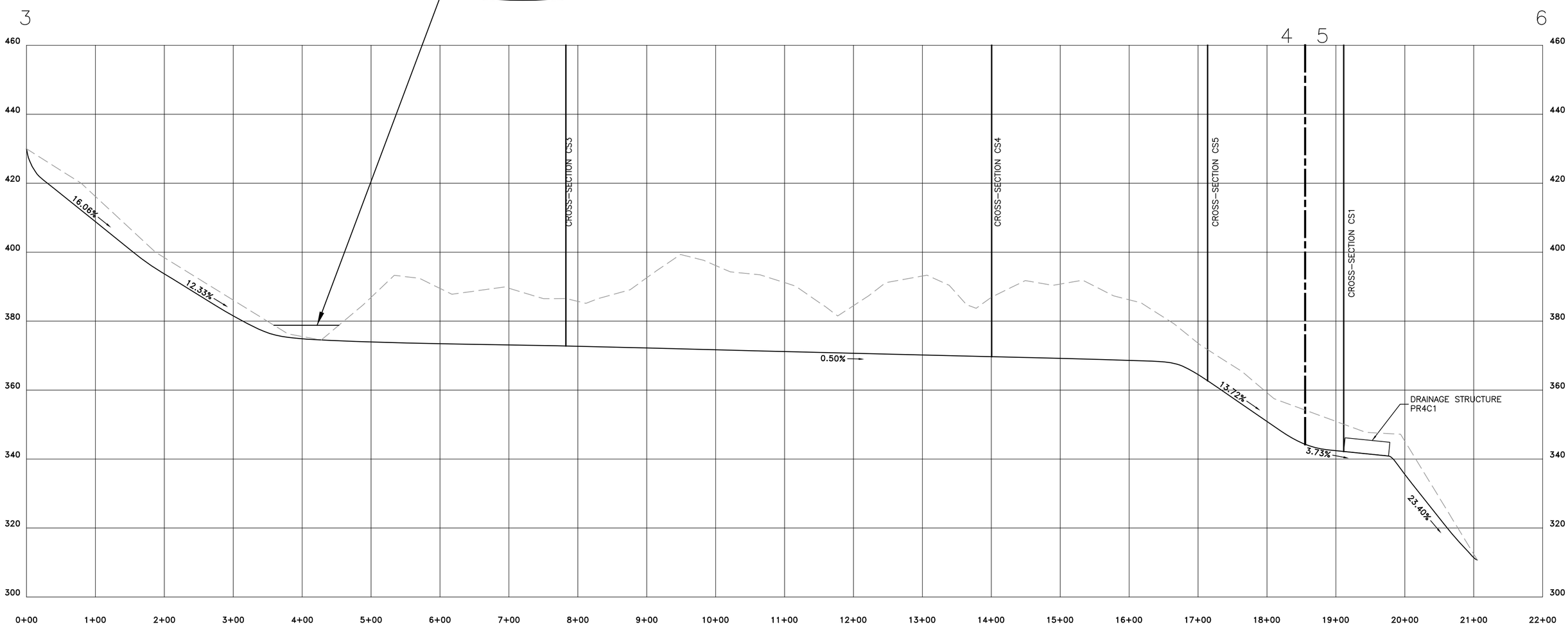

VERTICAL SCALE: 1" = 20'
HORIZONTAL SCALE: 1" = 100'

PERC ENGINEERING CO., INC.
1806 Highway 78 West Jasper, Alabama 35501
P.O. Box 1712 Jasper, Alabama 35502
(205) 384-5553 Office (205) 384-5114 Fax

ATTACHEMENT III-B-3
GUNNER-REILLY CORPORATION
CANE CREEK MINE
P-3952
DIVERSION DITCH 3-4 & 5-6 PROFILE

DRAWN BY: J.W.T. DWG. NAME: DD3–4PRO	DATE: 02/10/2011
APPROVED BY: L.G.S.	SCALE: AS NOTED

X:\Eng\GS\Mines\GUNNER-REILLY\Diversion\3-4\DD3-4PRO.dwg 02/10/11 16:17

DIVERSION DETAIL

DIVERSION 3–4
CROSS–SECTION 1 (0+00 TO 1+69)

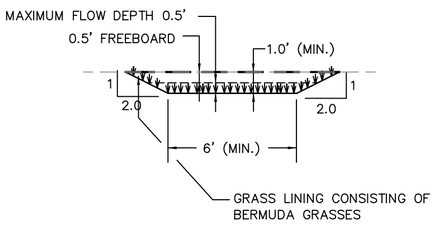

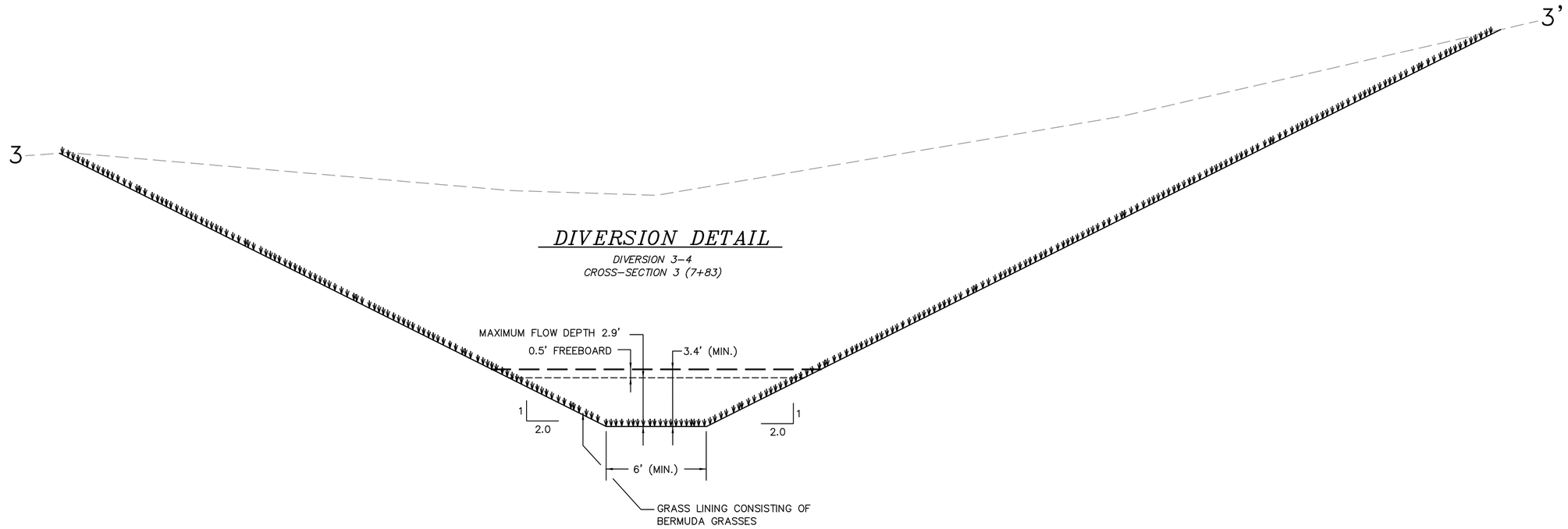

DIVERSION DETAIL

DIVERSION 3–4
CROSS–SECTION 2 (1+69 TO 4+00)

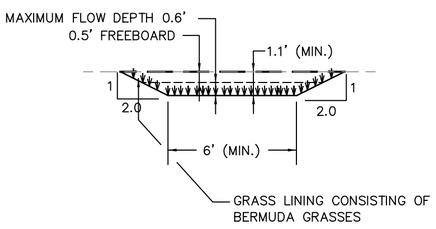

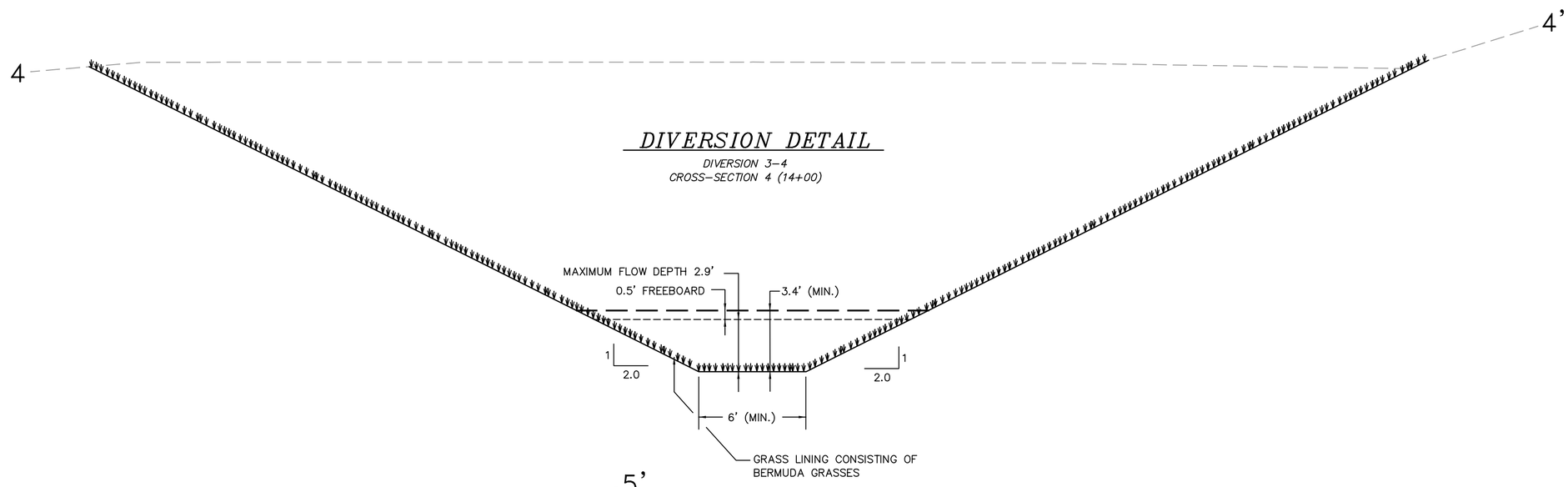

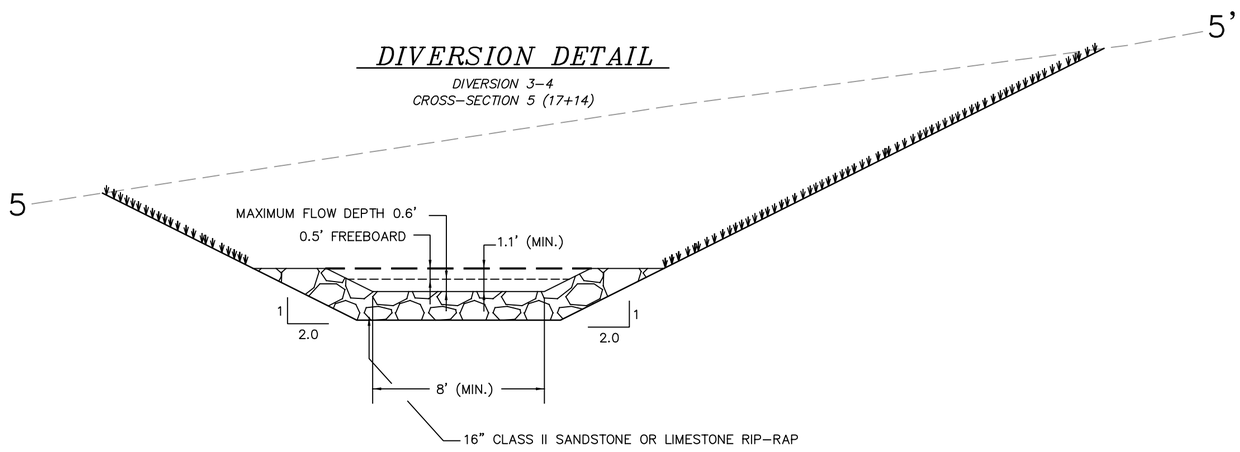

LEGEND

EXISTING GRADE

PROPOSED FINISHED GRADE

PERC ENGINEERING CO., INC.
1824 Highway 78 East Jasper, Alabama 35501
P.O. Box 1712 Jasper, Alabama 35502
(205) 384-5965 Office (205) 295-3114 Fax

Gunner-Reilly Corp.
Cane Creek Mine
P-3952
Diversion Ditch 3-4
Cross-Sections

DRAWN BY: J.W.T. DWG. NAME: DD3–4CS	DATE: 02/11/2011
APPROVED BY: L.G.S.	SCALE: 1" = 5'

Gunner-Reilly Corporation
Cane Creek Mine
P-3952
Diversion Ditch 3-4 (16.06%)
Station 0+00 to 1+69

4.3 Inch, 10 Year-6 Hour

NRCS Type II

JWT

PERC Engineering Co., Inc.
PO BOX 1712
Jasper, AL 35503

Phone: 205-384-5553
Email: John.Taylor@percengineering.com

General Information

Storm Information:

Storm Type:	NRCS Type II
Design Storm:	10 yr - 6 hr
Rainfall Depth:	4.300 inches

Structure Networking:

Type	Stru #	(flows into)	Stru #	Musk. K (hrs)	Musk. X	Description
Channel	#1	==>	End	0.000	0.000	Diversion Ditch 3-4

#1
Chan'l

Structure Summary:

	Immediate Contributing Area (ac)	Total Contributing Area (ac)	Peak Discharge (cfs)	Total Runoff Volume (ac-ft)
#1	2.600	2.600	7.06	0.35

Structure Detail:

Structure #1 (Vegetated Channel)

Diversion Ditch 3-4

Trapezoidal Vegetated Channel Inputs:

Material: Bermuda grass

Bottom Width (ft)	Left Sideslope Ratio	Right Sideslope Ratio	Slope (%)	Retardance Classes	Freeboard Depth (ft)	Freeboard % of Depth	Freeboard Mult. x (VxD)	Limiting Velocity (fps)
6.00	2.0:1	2.0:1	16.1	D, B	0.50			6.0

Vegetated Channel Results:

	Stability Class D w/o Freeboard	Stability Class D w/ Freeboard	Capacity Class B w/o Freeboard	Capacity Class B w/ Freeboard
Design Discharge:	7.06 cfs		7.06 cfs	
Depth:	0.27 ft	0.77 ft	0.49 ft	0.99 ft
Top Width:	7.08 ft	9.08 ft	7.98 ft	9.98 ft
Velocity:	3.98 fps		2.05 fps	
X-Section Area:	1.77 sq ft		3.45 sq ft	
Hydraulic Radius:	0.246 ft		0.421 ft	
Froude Number:	1.40		0.55	
Roughness Coefficient:	0.0587		0.1636	

Subwatershed Hydrology Detail:

Stru #	SWS #	SWS Area (ac)	Time of Conc (hrs)	Musk K (hrs)	Musk X	Curve Number	UHS	Peak Discharge (cfs)	Runoff Volume (ac-ft)
#1	1	2.300	0.055	0.003	0.442	70.000	M	5.99	0.293
	2	0.300	0.010	0.000	0.000	81.000	F	1.08	0.059
	Σ	**2.600**						**7.06**	**0.352**

Subwatershed Time of Concentration Details:

Stru #	SWS #	Land Flow Condition	Slope (%)	Vert. Dist. (ft)	Horiz. Dist. (ft)	Velocity (fps)	Time (hrs)
#1	1	1. Forest with heavy ground litter	20.00	40.00	200.00	1.130	0.049
		8. Large gullies, diversions, and low flowing streams	25.33	95.00	375.00	15.090	0.006
#1	**1**	**Time of Concentration:**					**0.055**
#1	2	5. Nearly bare and untilled, and alluvial valley fans	30.00	60.00	200.00	5.470	0.010
#1	**2**	**Time of Concentration:**					**0.010**

Subwatershed Muskingum Routing Details:

Stru #	SWS #	Land Flow Condition	Slope (%)	Vert. Dist. (ft)	Horiz. Dist. (ft)	Velocity (fps)	Time (hrs)
#1	1	8. Large gullies, diversions, and low flowing streams	18.52	30.00	162.00	12.900	0.003
#1	**1**	**Muskingum K:**					**0.003**

Copyright 1998 -2007 Pamela L Schwab

Gunner-Reilly Corporation

Cane Creek Mine

P-3952

Diversion Ditch 3-4 (12.33%)

Station 1+69 to 4+00

4.3 Inch, 10 Year-6 Hour

NRCS Type II

JWT

PERC Engineering Co., Inc.
PO BOX 1712
Jasper, AL 35503

Phone: 205-384-5553
Email: John.Taylor@percengineering.com

General Information

Storm Information:

Storm Type:	NRCS Type II
Design Storm:	10 yr - 6 hr
Rainfall Depth:	4.300 inches

Structure Networking:

Type	Stru #	(flows into)	Stru #	Musk. K (hrs)	Musk. X	Description
Channel	#1	==>	End	0.000	0.000	Diversion Ditch 3-4

#1
Chan'l

Structure Summary:

	Immediate Contributing Area (ac)	Total Contributing Area (ac)	Peak Discharge (cfs)	Total Runoff Volume (ac-ft)
#1	3.700	3.700	10.82	0.55

Structure Detail:

Structure #1 (Vegetated Channel)

Diversion Ditch 3-4

Trapezoidal Vegetated Channel Inputs:

Material: Bermuda grass

Bottom Width (ft)	Left Sideslope Ratio	Right Sideslope Ratio	Slope (%)	Retardance Classes	Freeboard Depth (ft)	Freeboard % of Depth	Freeboard Mult. x (VxD)	Limiting Velocity (fps)
6.00	2.0:1	2.0:1	12.3	D, B	0.50			6.0

Vegetated Channel Results:

	Stability Class D w/o Freeboard	Stability Class D w/ Freeboard	Capacity Class B w/o Freeboard	Capacity Class B w/ Freeboard
Design Discharge:	10.82 cfs		10.82 cfs	
Depth:	0.35 ft	0.85 ft	0.61 ft	1.11 ft
Top Width:	7.41 ft	9.41 ft	8.44 ft	10.44 ft
Velocity:	4.58 fps		2.45 fps	
X-Section Area:	2.36 sq ft		4.41 sq ft	
Hydraulic Radius:	0.312 ft		0.505 ft	
Froude Number:	1.43		0.60	
Roughness Coefficient:	0.0523		0.1351	

Subwatershed Hydrology Detail:

Stru #	SWS #	SWS Area (ac)	Time of Conc (hrs)	Musk K (hrs)	Musk X	Curve Number	UHS	Peak Discharge (cfs)	Runoff Volume (ac-ft)
#1	1	2.500	0.055	0.008	0.442	70.000	M	6.51	0.318
	2	1.200	0.014	0.000	0.000	81.000	F	4.31	0.237
	Σ	**3.700**						**10.82**	**0.555**

Subwatershed Time of Concentration Details:

Stru #	SWS #	Land Flow Condition	Slope (%)	Vert. Dist. (ft)	Horiz. Dist. (ft)	Velocity (fps)	Time (hrs)
#1	1	1. Forest with heavy ground litter	20.00	40.00	200.00	1.130	0.049
		8. Large gullies, diversions, and low flowing streams	25.33	95.00	375.00	15.090	0.006
#1	**1**	**Time of Concentration:**					**0.055**
#1	2	5. Nearly bare and untilled, and alluvial valley fans	30.00	60.00	200.00	5.470	0.010
		8. Large gullies, diversions, and low flowing streams	18.87	40.00	212.00	13.030	0.004
#1	**2**	**Time of Concentration:**					**0.014**

Subwatershed Muskingum Routing Details:

Stru #	SWS #	Land Flow Condition	Slope (%)	Vert. Dist. (ft)	Horiz. Dist. (ft)	Velocity (fps)	Time (hrs)
#1	1	8. Large gullies, diversions, and low flowing streams	18.47	70.00	379.00	12.890	0.008
#1	**1**	**Muskingum K:**					**0.008**

Gunner-Reilly Corporation

Cane Creek Mine

P-3952

Diversion Ditch 3-4 (0.50%)

Station 4+00 to 16+59

4.3 Inch, 10 Year-6 Hour

NRCS Type II

JWT

PERC Engineering Co., Inc.
PO BOX 1712
Jasper, AL 35503

Phone: 205-384-5553
Email: John.Taylor@percengineering.com

General Information

Storm Information:

Storm Type:	NRCS Type II
Design Storm:	10 yr - 6 hr
Rainfall Depth:	4.300 inches

Structure Networking:

Type	Stru #	(flows into)	Stru #	Musk. K (hrs)	Musk. X	Description
Channel	#1	==>	End	0.000	0.000	Diversion Ditch 3-4

#1
Chan'l

Structure Summary:

	Immediate Contributing Area (ac)	Total Contributing Area (ac)	Peak Discharge (cfs)	Total Runoff Volume (ac-ft)
#1	23.000	23.000	71.16	3.91

Structure Detail:

Structure #1 (Vegetated Channel)

Diversion Ditch 3-4

Trapezoidal Vegetated Channel Inputs:

Material: Bermuda grass

Bottom Width (ft)	Left Sideslope Ratio	Right Sideslope Ratio	Slope (%)	Retardance Classes	Freeboard Depth (ft)	Freeboard % of Depth	Freeboard Mult. x (VxD)	Limiting Velocity (fps)
6.00	2.0:1	2.0:1	0.5	D, B	0.50			8.0

Vegetated Channel Results:

	Stability Class D w/o Freeboard	Stability Class D w/ Freeboard	Capacity Class B w/o Freeboard	Capacity Class B w/ Freeboard
Design Discharge:	71.16 cfs		71.16 cfs	
Depth:	2.01 ft	2.51 ft	2.91 ft	3.41 ft
Top Width:	14.03 ft	16.03 ft	17.63 ft	19.63 ft
Velocity:	3.54 fps		2.07 fps	
X-Section Area:	20.11 sq ft		34.36 sq ft	
Hydraulic Radius:	1.343 ft		1.808 ft	
Froude Number:	0.52		0.26	
Roughness Coefficient:	0.0362		0.0755	

Subwatershed Hydrology Detail:

Stru #	SWS #	SWS Area (ac)	Time of Conc (hrs)	Musk K (hrs)	Musk X	Curve Number	UHS	Peak Discharge (cfs)	Runoff Volume (ac-ft)
#1	1	9.000	0.062	0.085	0.390	70.000	M	23.43	1.145
	2	14.000	0.107	0.000	0.000	81.000	F	50.28	2.762
	$\sum$	**23.000**						**71.16**	**3.908**

Subwatershed Time of Concentration Details:

Stru #	SWS #	Land Flow Condition	Slope (%)	Vert. Dist. (ft)	Horiz. Dist. (ft)	Velocity (fps)	Time (hrs)
#1	1	1. Forest with heavy ground litter	15.00	30.00	200.00	0.970	0.057
		8. Large gullies, diversions, and low flowing streams	38.01	130.00	342.00	18.490	0.005
#1	**1**	**Time of Concentration:**					**0.062**
#1	2	5. Nearly bare and untilled, and alluvial valley fans	16.00	32.00	200.00	4.000	0.013
		8. Large gullies, diversions, and low flowing streams	2.61	43.00	1,649.00	4.840	0.094
#1	**2**	**Time of Concentration:**					**0.107**

Subwatershed Muskingum Routing Details:

Stru #	SWS #	Land Flow Condition	Slope (%)	Vert. Dist. (ft)	Horiz. Dist. (ft)	Velocity (fps)	Time (hrs)
#1	1	8. Large gullies, diversions, and low flowing streams	4.06	75.00	1,849.00	6.040	0.085
#1	**1**	**Muskingum K:**					**0.085**

Copyright 1998 -2007 Pamela J. Schwab

Gunner-Reilly Corporation

Cane Creek Mine

P-3952

Diversion Ditch 3-4 (13.72%)

Station 16+59 to 18+15

4.3 Inch, 10 Year-6 Hour

NRCS Type II

JWT

PERC Engineering Co., Inc.
PO BOX 1712
Jasper, AL 35503

Phone: 205-384-5553
Email: John.Taylor@percengineering.com

General Information

Storm Information:

Storm Type:	NRCS Type II
Design Storm:	10 yr - 6 hr
Rainfall Depth:	4.300 inches

Structure Networking:

Type	Stru #	(flows into)	Stru #	Musk. K (hrs)	Musk. X	Description
Channel	#1	==>	End	0.000	0.000	Diversion Ditch 3-4

#1
Chan'l

Structure Summary:

	Immediate Contributing Area (ac)	Total Contributing Area (ac)	Peak Discharge (cfs)	Total Runoff Volume (ac-ft)
#1	23.000	23.000	71.16	3.91

Structure Detail:

Structure #1 (Riprap Channel)

Diversion Ditch 3-4

Trapezoidal Riprap Channel Inputs:

Material: Riprap

Bottom Width (ft)	Left Sideslope Ratio	Right Sideslope Ratio	Slope (%)	Freeboard Depth (ft)	Freeboard % of Depth	Freeboard Mult. x (VxD)
8.00	2.0:1	2.0:1	13.7	0.50		

Riprap Channel Results:

Simons/OSM Method - Steep Slope Design

	w/o Freeboard	w/ Freeboard
Design Discharge:	71.16 cfs	
Depth:	0.57 ft	1.07 ft
Top Width:	10.27 ft	12.27 ft
Velocity*:		
X-Section Area:	5.19 sq ft	
Hydraulic Radius:	0.492 ft	
Froude Number*:		
Manning's n*:		
Dmin:	4.00 in	
D50:	12.00 in	
Dmax:	15.00 in	

Velocity and Manning's n calculations may not apply for this method.

Subwatershed Hydrology Detail:

Stru #	SWS #	SWS Area (ac)	Time of Conc (hrs)	Musk K (hrs)	Musk X	Curve Number	UHS	Peak Discharge (cfs)	Runoff Volume (ac-ft)
#1	1	9.000	0.062	0.085	0.390	70.000	M	23.43	1.145
	2	14.000	0.107	0.000	0.000	81.000	F	50.28	2.762
	$\sum$	**23.000**						**71.16**	**3.908**

Subwatershed Time of Concentration Details:

Stru #	SWS #	Land Flow Condition	Slope (%)	Vert. Dist. (ft)	Horiz. Dist. (ft)	Velocity (fps)	Time (hrs)
#1	1	1. Forest with heavy ground litter	15.00	30.00	200.00	0.970	0.057
		8. Large gullies, diversions, and low flowing streams	38.01	130.00	342.00	18.490	0.005
#1	**1**	**Time of Concentration:**					**0.062**
#1	2	5. Nearly bare and untilled, and alluvial valley fans	16.00	32.00	200.00	4.000	0.013
		8. Large gullies, diversions, and low flowing streams	2.61	43.00	1,649.00	4.840	0.094
#1	**2**	**Time of Concentration:**					**0.107**

Subwatershed Muskingum Routing Details:

Stru #	SWS #	Land Flow Condition	Slope (%)	Vert. Dist. (ft)	Horiz. Dist. (ft)	Velocity (fps)	Time (hrs)
#1	1	8. Large gullies, diversions, and low flowing streams	4.06	75.00	1,849.00	6.040	0.085
#1	**1**	**Muskingum K:**					**0.085**

LEGEND

EXISTING GRADE

PROPOSED FINISHED GRADE

DIVERSION DETAIL

DIVERSION 5–6
CROSS–SECTION 1 (19+11 CULVERT INLET)

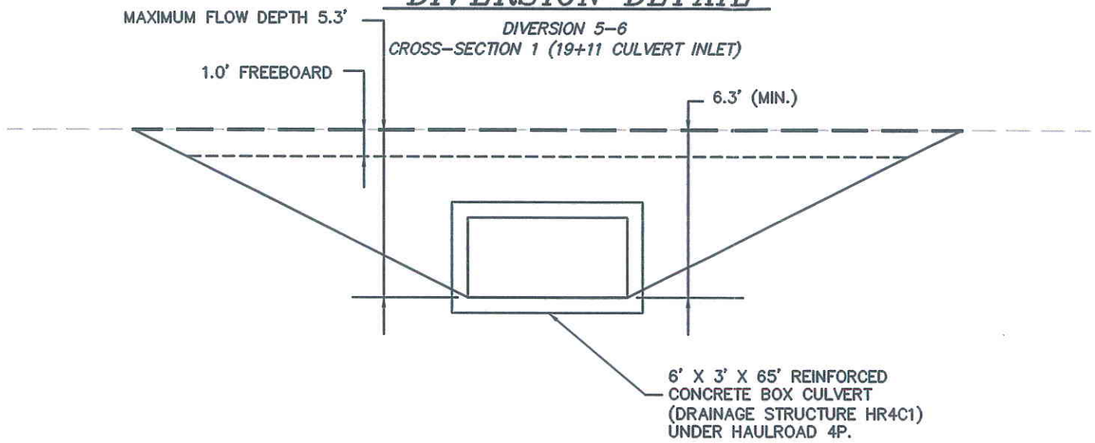

*NOTE: THE UPSTREAM INLET SLOPE & DOWNSTREAM OUTLET SLOPE WILL BE LINED WITH 16" OF CLASS II SANDSTONE OR LIMESTONE RIP–RAP. SEE DETAILS BELOW FOR INLET AND OUTLET SPECIFICATIONS.

DIVERSION DETAIL & CULVERT INLET DETAIL

DIVERSION 5–6
CROSS–SECTION 2 (18+55 TO 19+11)
NOT TO SCALE

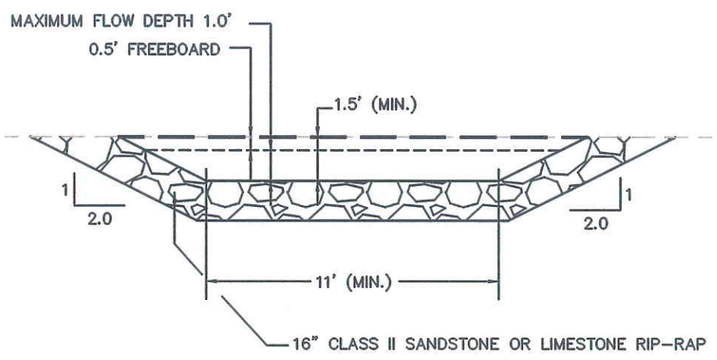

DIVERSION DETAIL & CULVERT OUTLET DETAL

DIVERSION 5–6
CROSS–SECTION 3 (19+76 TO 21+05)
NOT TO SCALE

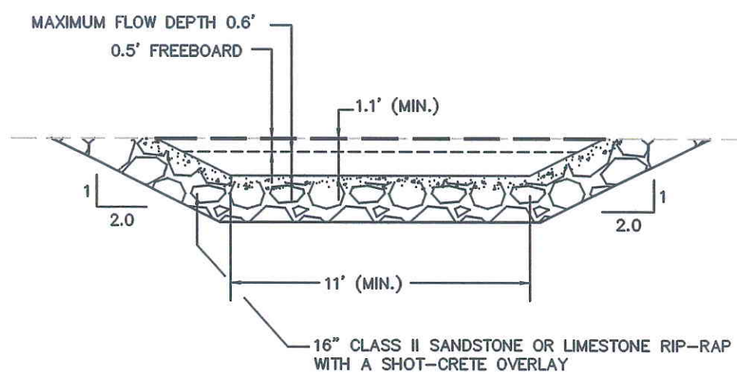

PERC ENGINEERING CO., INC.
1604 Highway 78 West Jasper, Alabama 35501
P.O. Box 1212 Jasper, Alabama 35502
(205) 384-5552 Office (205) 293-2114 Fax

Gunner-Reilly Corp.
Cane Creek Mine
P-3952
Diversion Ditch 5-6
Cross-Sections

DRAWN BY: J.W.T. DWG. NAME: DD5–6CS	DATE: 02/23/2011
APPROVED BY: L.G.S.	SCALE: 1" = 5'

Y:\Eng\GS\Vimex\GUNNER-REILLY\diversions\3-4\DD5-6CS.dwg 03/04/11 16:51

Copyright 1998 -2007 Pamela J. Schwab

Gunner-Reilly Corporation

Cane Creek Mine

P-3952

Diversion Ditch 5-6 (3.73%)

Station 18+55 to 19+11

4.3 Inch, 10 Year-6 Hour

NRCS Type II

JWT

PERC Engineering Co., Inc.
PO BOX 1712
Jasper, AL 35503

Phone: 205-384-5553
Email: John.Taylor@percengineering.com

General Information

Storm Information:

Storm Type:	NRCS Type II
Design Storm:	10 yr - 6 hr
Rainfall Depth:	4.300 inches

Structure Networking:

Type	Stru #	(flows into)	Stru #	Musk. K (hrs)	Musk. X	Description
Channel	#1	==>	End	0.000	0.000	Diversion Ditch 5-6

#1
Chan'l

Structure Summary:

	Immediate Contributing Area (ac)	Total Contributing Area (ac)	Peak Discharge (cfs)	Total Runoff Volume (ac-ft)
#1	52.000	52.000	154.97	8.51

Structure Detail:

Structure #1 (Riprap Channel)

Diversion Ditch 5-6

Trapezoidal Riprap Channel Inputs:

Material: Riprap

Bottom Width (ft)	Left Sideslope Ratio	Right Sideslope Ratio	Slope (%)	Freeboard Depth (ft)	Freeboard % of Depth	Freeboard Mult. x (VxD)
11.00	2.0:1	2.0:1	3.7	0.50		

Riprap Channel Results:

Simons/OSM Method - Steep Slope Design

	w/o Freeboard	w/ Freeboard
Design Discharge:	154.97 cfs	
Depth:	1.01 ft	1.51 ft
Top Width:	15.05 ft	17.05 ft
Velocity*:		
X-Section Area:	13.70 sq ft	
Hydraulic Radius:	0.850 ft	
Froude Number*:		
Manning's n*:		
Dmin:	4.00 in	
D50:	12.00 in	
Dmax:	15.00 in	

Velocity and Manning's n calculations may not apply for this method.

Subwatershed Hydrology Detail:

Stru #	SWS #	SWS Area (ac)	Time of Conc (hrs)	Musk K (hrs)	Musk X	Curve Number	UHS	Peak Discharge (cfs)	Runoff Volume (ac-ft)
#1	1	25.000	0.062	0.085	0.390	70.000	M	65.07	3.181
	2	27.000	0.107	0.000	0.000	81.000	F	96.96	5.327
	$\sum$	**52.000**						**154.97**	**8.508**

Subwatershed Time of Concentration Details:

Stru #	SWS #	Land Flow Condition	Slope (%)	Vert. Dist. (ft)	Horiz. Dist. (ft)	Velocity (fps)	Time (hrs)
#1	1	1. Forest with heavy ground litter	15.00	30.00	200.00	0.970	0.057
		8. Large gullies, diversions, and low flowing streams	38.01	130.00	342.00	18.490	0.005
#1	**1**	**Time of Concentration:**					**0.062**
#1	2	5. Nearly bare and untilled, and alluvial valley fans	16.00	32.00	200.00	4.000	0.013
		8. Large gullies, diversions, and low flowing streams	2.61	43.00	1,649.02	4.840	0.094
#1	**2**	**Time of Concentration:**					**0.107**

Subwatershed Muskingum Routing Details:

Stru #	SWS #	Land Flow Condition	Slope (%)	Vert. Dist. (ft)	Horiz. Dist. (ft)	Velocity (fps)	Time (hrs)
#1	1	8. Large gullies, diversions, and low flowing streams	4.06	75.00	1,849.00	6.040	0.085
#1	**1**	**Muskingum K:**					**0.085**

CURRENT DATE: 08-12-2011 FILE DATE: 08-12-2011
CURRENT TIME: 16:58:53 FILE NAME: CCHR4C1

FHWA CULVERT ANALYSIS
HY-8, VERSION 6.2

CULV NO.	SITE DATA: INLET ELEV. (ft)	OUTLET ELEV. (ft)	CULVERT LENGTH (ft)	CULVERT SHAPE, MATERIAL, INLET: BARRELS	SHAPE MATERIAL	SPAN (ft)	RISE (ft)	MANNING n	INLET TYPE
1	341.19	340.15	52.01	1	RCB	6.00	3.00	.016	CONVENTIONAL
2									
3									
4									
5									
6									

SUMMARY OF CULVERT FLOWS (cfs) FILE: CCHR4C1 DATE: 08-12-2011

ELEV (ft)	TOTAL	1	2	3	4	5	6	ROADWAY	ITR
341.19	0.0	0.0	0.0	0.0	0.0	0.0	0.0	0.00	1
342.27	17.5	17.5	0.0	0.0	0.0	0.0	0.0	0.00	1
342.90	35.0	35.0	0.0	0.0	0.0	0.0	0.0	0.00	1
343.42	52.5	52.5	0.0	0.0	0.0	0.0	0.0	0.00	1
343.90	70.0	70.0	0.0	0.0	0.0	0.0	0.0	0.00	1
344.36	87.5	87.5	0.0	0.0	0.0	0.0	0.0	0.00	1
344.84	105.0	105.0	0.0	0.0	0.0	0.0	0.0	0.00	1
345.36	122.5	122.5	0.0	0.0	0.0	0.0	0.0	0.00	1
345.93	140.0	140.0	0.0	0.0	0.0	0.0	0.0	0.00	1
346.48	155.0	155.0	0.0	0.0	0.0	0.0	0.0	0.00	1
347.31	175.0	175.0	0.0	0.0	0.0	0.0	0.0	0.00	1
347.71	183.9	183.9	0.0	0.0	0.0	0.0	0.0	OVERTOPPING	

SUMMARY OF ITERATIVE SOLUTION ERRORS FILE: CCHR4C1 DATE: 08-12-2011

HEAD ELEV (ft)	HEAD ERROR (ft)	TOTAL FLOW (cfs)	FLOW ERROR (cfs)	% FLOW ERROR
341.19	0.000	0.00	0.00	0.00
342.27	0.000	17.50	0.00	0.00
342.90	0.000	35.00	0.00	0.00
343.42	0.000	52.50	0.00	0.00
343.90	0.000	70.00	0.00	0.00
344.36	0.000	87.50	0.00	0.00
344.84	0.000	105.00	0.00	0.00
345.36	0.000	122.50	0.00	0.00
345.93	0.000	140.00	0.00	0.00
346.48	0.000	154.97	0.00	0.00
347.31	0.000	175.00	0.00	0.00

<1> TOLERANCE (ft) = 0.010 <2> TOLERANCE (%) = 1.000

2

CURRENT DATE: 08-12-2011 FILE DATE: 08-12-2011
CURRENT TIME: 16:58:53 FILE NAME: CCHR4C1

PERFORMANCE CURVE FOR CULVERT 1 - 1(6.00 (ft) BY 3.00 (ft)) RCB

DIS-CHARGE FLOW (cfs)	HEAD-WATER ELEV. (ft)	INLET CONTROL DEPTH (ft)	OUTLET CONTROL DEPTH (ft)	FLOW TYPE <F4>	NORMAL DEPTH (ft)	CRIT. DEPTH (ft)	OUTLET DEPTH (ft)	TW DEPTH (ft)	OUTLET VEL. (fps)	TW VEL. (fps)
0.00	341.19	0.00	0.00	0-NF	0.00	0.00	0.00	1.00	0.00	0.00
17.50	342.27	1.08	1.08	1-S2n	0.41	0.64	0.43	1.00	6.74	0.00
35.00	342.90	1.71	1.71	1-S2n	0.66	1.02	0.67	1.00	8.76	0.00
52.50	343.42	2.23	2.23	1-S2n	0.86	1.34	0.87	1.00	10.06	0.00
70.00	343.90	2.71	0.00	1-S2n	1.04	1.62	1.05	1.00	11.08	0.00
87.50	344.36	3.17	0.00	5-S2n	1.22	1.88	1.32	1.00	11.02	0.00
105.00	344.84	3.65	0.00	5-S2n	1.38	2.12	1.51	1.00	11.56	0.00
122.50	345.36	4.17	0.00	5-S2n	1.53	2.35	1.70	1.00	12.01	0.00
140.00	345.93	4.74	0.00	5-S2n	1.68	2.57	1.88	1.00	12.42	0.00
154.97	346.48	5.29	0.00	5-S2n	1.81	2.75	2.03	1.00	12.74	0.00
175.00	347.31	6.12	0.00	5-S2n	1.97	2.98	2.22	1.00	13.12	0.00

El. inlet face invert 341.19 ft El. outlet invert 340.15 ft
El. inlet throat invert 0.00 ft El. inlet crest 0.00 ft

***** SITE DATA ***** CULVERT INVERT **********

INLET STATION	0.00 ft
INLET ELEVATION	341.19 ft
OUTLET STATION	52.00 ft
OUTLET ELEVATION	340.15 ft
NUMBER OF BARRELS	1
SLOPE (V/H)	0.0200
CULVERT LENGTH ALONG SLOPE	52.01 ft

***** CULVERT DATA SUMMARY **********

BARREL SHAPE	BOX
BARREL SPAN	6.00 ft
BARREL RISE	3.00 ft
BARREL MATERIAL	CONCRETE
BARREL MANNING'S n	0.016
INLET TYPE	CONVENTIONAL
INLET EDGE AND WALL	SQUARE EDGE (90 DEG.)
INLET DEPRESSION	NONE

CURRENT DATE: 08-12-2011 FILE DATE: 08-12-2011
CURRENT TIME: 16:58:53 FILE NAME: CCHR4C1

ÄÄ
ÄÄÄÄÄÄÄÄÄÄÄÄÄÄÄÄÄÄÄÄÄÄÄÄÄÄ TAILWATER ÄÄÄÄÄÄÄÄÄÄÄÄÄÄÄÄÄÄÄÄÄÄÄÄÄÄ
ÄÄ
ÄÄ

CONSTANT WATER SURFACE ELEVATION
341.15

ÄÄ
ÄÄÄÄÄÄÄÄÄÄÄÄÄÄÄÄÄÄÄÄÄÄÄÄÄÄ ROADWAY OVERTOPPING DATA ÄÄÄÄÄÄÄÄÄÄÄÄÄÄÄÄÄÄÄÄÄÄÄÄÄÄ
ÄÄ

ROADWAY SURFACE	GRAVEL
EMBANKMENT TOP WIDTH	25.00 ft
CREST LENGTH	100.00 ft
OVERTOPPING CREST ELEVATION	347.71 ft

ÄÄ
□

Copyright 1998 -2007 Pamela J. Schwab

Gunner-Reilly Corporation

Cane Creek Mine

P-3952

Diversion Ditch 5-6 (23.40%)

Station19+76 to 21+05

4.3 Inch, 10 Year-6 Hour

NRCS Type II

JWT

PERC Engineering Co., Inc.
PO BOX 1712
Jasper, AL 35503

Phone: 205-384-5553
Email: John.Taylor@percengineering.com

General Information

Storm Information:

Storm Type:	NRCS Type II
Design Storm:	10 yr - 6 hr
Rainfall Depth:	4.300 inches

Structure Networking:

Type	Stru #	(flows into)	Stru #	Musk. K (hrs)	Musk. X	Description
Channel	#1	==>	End	0.000	0.000	Diversion Ditch 5-6

#1
Chan'l

Structure Summary:

	Immediate Contributing Area (ac)	Total Contributing Area (ac)	Peak Discharge (cfs)	Total Runoff Volume (ac-ft)
#1	52.000	52.000	154.97	8.51

Structure Detail:

Structure #1 (Nonerodible Channel)

Diversion Ditch 5-6

Trapezoidal Nonerodible Channel Inputs:

Material: Concrete, Rubble

Bottom Width (ft)	Left Sideslope Ratio	Right Sideslope Ratio	Slope (%)	Manning's n	Freeboard Depth (ft)	Freeboard % of Depth	Freeboard Mult. x (VxD)
11.00	2.0:1	2.0:1	23.4	0.0220	0.50		

Nonerodible Channel Results:

	w/o Freeboard	w/ Freeboard
Design Discharge:	154.97 cfs	
Depth:	0.59 ft	1.09 ft
Top Width:	13.37 ft	15.37 ft
Velocity:	21.44 fps	
X-Section Area:	7.23 sq ft	
Hydraulic Radius:	0.529 ft	
Froude Number:	5.14	

Subwatershed Hydrology Detail:

Stru #	SWS #	SWS Area (ac)	Time of Conc (hrs)	Musk K (hrs)	Musk X	Curve Number	UHS	Peak Discharge (cfs)	Runoff Volume (ac-ft)
#1	1	25.000	0.062	0.085	0.390	70.000	M	65.07	3.181
	2	27.000	0.107	0.000	0.000	81.000	F	96.96	5.327
	Σ	**52.000**						**154.97**	**8.508**

Subwatershed Time of Concentration Details:

Stru #	SWS #	Land Flow Condition	Slope (%)	Vert. Dist. (ft)	Horiz. Dist. (ft)	Velocity (fps)	Time (hrs)
#1	1	1. Forest with heavy ground litter	15.00	30.00	200.00	0.970	0.057
		8. Large gullies, diversions, and low flowing streams	38.01	130.00	342.00	18.490	0.005
#1	**1**	**Time of Concentration:**					**0.062**
#1	2	5. Nearly bare and untilled, and alluvial valley fans	16.00	32.00	200.00	4.000	0.013
		8. Large gullies, diversions, and low flowing streams	2.61	43.00	1,649.00	4.840	0.094
#1	**2**	**Time of Concentration:**					**0.107**

Subwatershed Muskingum Routing Details:

Stru #	SWS #	Land Flow Condition	Slope (%)	Vert. Dist. (ft)	Horiz. Dist. (ft)	Velocity (fps)	Time (hrs)
#1	1	8. Large gullies, diversions, and low flowing streams	4.06	75.00	1,849.00	6.040	0.085
#1	**1**	**Muskingum K:**					**0.085**