HYDROLOGY STUDY FOR
WARRIOR 282 LLC

WARRIOR MINE NO. 1

P-3953

JEFFERSON COUNTY, ALABAMA

BY

PERC ENGINEERING CO., INC.

P.O. BOX 1712

JASPER, ALABAMA 35502

DETAILED DESIGN PLANS

BASIN 009

ATTACHMENT III-B-2(a)

DECEMBER 23, 2011

PERC
ENGINEERING CO., INC.

Telephone: (205) 384-5553
Facsimile: (205) 295-3114 - Main Building
(205) 295-3115 - Water Lab
Web Address: www.percengineering.com

December 23, 2011

Mr. Michael Harrison, P.E.
Alabama Surface Mining Commission
Post Office Box 2390
Jasper, Alabama 35502-2390

RE: Warrior 282 LLC
Warrior Mine No. 1
P-3953

Dear Michael:

I hereby certify the attached detailed design plans for Basin 009 for the above referenced location are in accordance with the Regulations of the Alabama Surface Mining Commission as adopted by Act 81-435 of December 18, 1981 and amended to date, and are true and correct to the best of my knowledge and belief.

If you have any questions or required additional information, please feel free to call.

Sincerely,
PERC Engineering Co., Inc.

Leslie G. Stephens, P.E., P.L.S.
Alabama Registration No. 14117-E

ALABAMA PROFESSIONAL ENGINEER AND LAND SURVEYOR REGISTERED No. 14117 LESLIE G. STEPHENS

Pond Construction Criteria

The embankment for sediment basins (temporary and permanent) shall be designed and built using the following as minimum criteria:

1. The top of the dam shall be no less than 12 feet wide.

2. See design sheet for maximum and minimum embankment slopes.

3. The foundation and abutments for the impounding structure shall be designed to be stable under all conditions of construction and operation of the impoundments, with a minimum static safety factor of 1.3 for the normal pool with steady seepage saturation conditions.

4. The dam shall be constructed with a cutoff trench based upon prudent engineering practices for the site. The cutoff shall be located on the dam centerline and be of sufficient depth to extend into a relatively impervious material from which the core of the dam shall also be constructed.

5. The embankment foundation area shall be cleared of all organic matter, all surfaces sloped to no steeper than lv:lh, and the entire foundation surface scarified.

6. The entire embankment and cutoff trench shall be compacted to 95 percent density, based on standard proctor as outlined in ASTM.

7. The material placed in the embankment shall be free of sod, roots, stones over 6 inches in diameter, and other objectionable materials. The fill material shall be placed and spread over the entire fill area, starting at the lowest point of the foundation, in layers not to exceed 12 inches in thickness. Construction of the fill shall be undertaken only at such times that the moisture content of the fill material will permit satisfactory compaction in accordance with paragraph 5.

8. The pool area of the basin will be cleared of timber and large undergrowth.

9. The primary decant system when consisting of a pipe shall be installed according to Class C pipe installation for embankment bedding.

10. The primary decant system shall be equipped with a device, or constructed, such as to insure that subsurface withdrawal is accomplished to prevent discharge of floating solids. If a channel is used as the primary decant a skimmer shall be installed to prevent floating solids from discharging.

11. A splash pad or riprap may be required under the discharge of the primary decant system where necessary to insure that the discharge does not erode the embankment.

12. The combination primary and secondary decant system shall be designed to safely carry the expected peak flow from a 25 year - 6 hour storm. The entire emergency overflow spillway channel will be a stabilized channel and will be stabilized upon completion of construction as specified within the detailed design plans using prudent engineering measures. These measures may consist of lining the spillway with concrete or a durable rock riprap, or the spillway being constructed in consolidated non-erodible material and planted with a mixture or both annual and perennial grasses, or a combination of any or all of the above.

13. Sediment basins using a single spillway system shall be an open channel of non-erodible construction consisting of concrete, durable rock riprap or its being constructed in consolidated non-erodible material as specified in the detailed design plans.

14. The settled embankment for temporary impoundments shall be a minimum of 1.0 foot above the maximum water elevation for the runoff from a 25 year - 6 hour, or a 10 year - 24 hour precipitation event (whichever has the greatest runoff). The settled embankment for permanent impoundments shall be a minimum of 1.0 foot above the maximum water elevation for the runoff from a 25 year - 6 hour, or a 10 year - 24 hour precipitation event (whichever has the greatest runoff).

15. If basins are built in series, then the combined decant system for each shall be designed to accommodate the entire contributing drainage area.

16. The dam and all disturbed areas shall be seeded with both perennial and annual grasses, fertilized and mulched in order to insure erosion is minimized. Hay bales or riprap may be placed at the toe of the dam immediately upon completion of construction.

17. The constructed height of the dam shall be increased a minimum of 5 percent over the design height to allow for settlement over the life of the embankment.

18. Final graded slopes of the entire permanent water impoundment area shall not exceed 2.5H-1.0V to provide for adequate safety and access for proposed water users.

19. Prior to Phase II bond release, additional data concerning water quality, water quantity, depth, size, configuration, post mining land use, etc., for each proposed permanent water impoundment, shall be submitted to the Regulatory Authority for permanent water impoundment approval.

20. All sediment basins will be inspected for stability, erosion, etc. two (2) times a month until removal of the structure or release of the reclamation bond.

21. The embankment and spillway will be maintained by repairing any damage such

as erosion, slope failure or spillway damage until removal of the structure or release of the performance bond.

22. All ponds shall be examined quarterly for structural weakness, instability, erosion, or other hazardous conditions and maintenance performed as necessary. Formal inspections shall be made on an annual basis, including any reports or modifications, in accordance with 880-X-10C-.20[l(j)] of the Alabama Surface Mining Commission Regulations.

23. Sediment will be removed from each pond when the accumulated sediment reaches the sediment storage volume as shown on the detailed design sheet.

24. Upon completion of mining, successful reclamation and effluent standards being met, each sediment basin not remaining as a permanent water impoundment will be dewatered in an environmentally safe manner (such as siphoning, pumping, etc.) and reclaimed to approximate original contours by the following procedure: A permanent diversion channel (designed for a 10 year - 24 hour precipitation event) shall be cut along the outer edge of the basin to re-route drainage around the basin and back through the stabilized spillway to allow reclamation of the sediment basin. The diversion channel shall be designed and grassed as per enclosed information. (See permanent diversion for basin disposal).Upon completion of the diversion channel the back slope of the dam shall be graded to a minimum 3H to 1V slope. The dewatered sediment basin area shall be seeded with some combination of the following: Fescue, bermuda, rye grass, canary grass and willows. After seeding the area shall be mulched. Any additional sediment or embankment material not used to meet original contour, if non-toxic, shall be spread in thin layers within the permit area and vegetated as stated in the approved reclamation plan. All toxic material encountered in the basin disposal shall be buried and covered with 4 feet of non-toxic material and vegetated as stated in the approved reclamation plan.

25. A qualified registered professional engineer or other qualified professional specialist, under the direction of the professional engineer shall conduct regular inspections during construction and upon completion shall inspect each basin for certification purposes.

26. Point source discharge embankments shall be constructed and abutments keyed into desirable material if at all possible. In the event that undesirable material is encountered, addition design and construction criteria shall be submitted prior to certification.

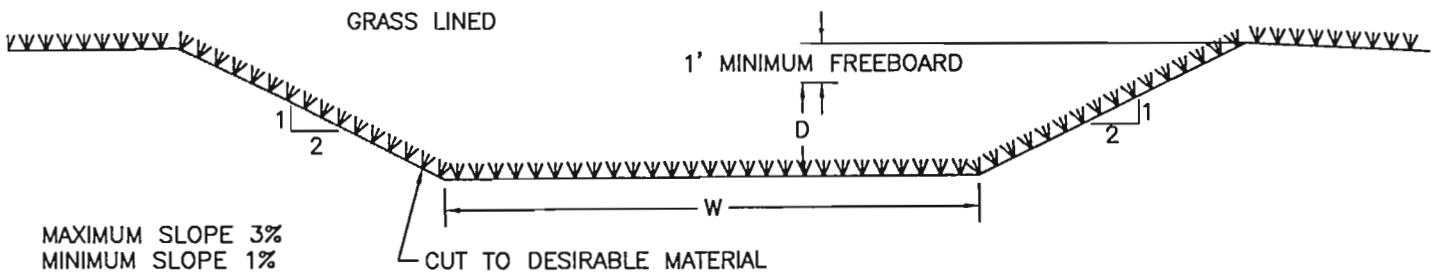

$Q = \frac{1.49}{N} A R^{2/3} S^{1/2}$
N(LOOSE STONE OR GRASS LINED) = 0.035
A = AREA
R = AREA/WETTED PERIMETER
S = SLOPE

* GRASS LINING: FESCUE, BERMUDA, RYE GRASS

DIVERSION CHANNEL DEPTH (D) FOR WIDTH (W) 8.0 FT.	
PEAK FLOW Q (CFS)	DEPTH D (FT)
1–15	0.5
15–50	1.0
50–100	1.5
100–180	2.0
180–270	2.5

DIVERSION CHANNEL DEPTH (D) FOR WIDTH (W) 10.0 FT.	
PEAK FLOW Q (CFS)	DEPTH D (FT)
0–15	0.5
15–60	1.0
60–120	1.5
120–210	2.0
210–320	2.5

DIVERSION CHANNEL DEPTH (D) FOR WIDTH (W) 12.0 FT.	
PEAK FLOW Q (CFS)	DEPTH D (FT)
0–20	0.5
20–70	1.0
70–150	1.5
150–250	2.0
250–383	2.5

DIVERSION CHANNEL DEPTH (D) FOR WIDTH (W) 15.0 FT.	
PEAK FLOW Q (CFS)	DEPTH D (FT)
0–20	0.5
20–90	1.0
90–180	1.5
180–300	2.0
300–450	2.5

PERC ENGINEERING CO., INC.

TYPICAL PERMANENT DIVERSION FOR BASIN DISPOSAL

DRAWN BY: J.W.T. DWG. NAME: TYPICALS	DATE: 04–16–2009
APPROVED BY: L.G.S.	SCALE: NONE

ATTACHMENT III–B–2–A

V:\Eng105\Typicals\III-B-2(a)\ ...nt III-B-2(a).dwg 04/10/09 11:15

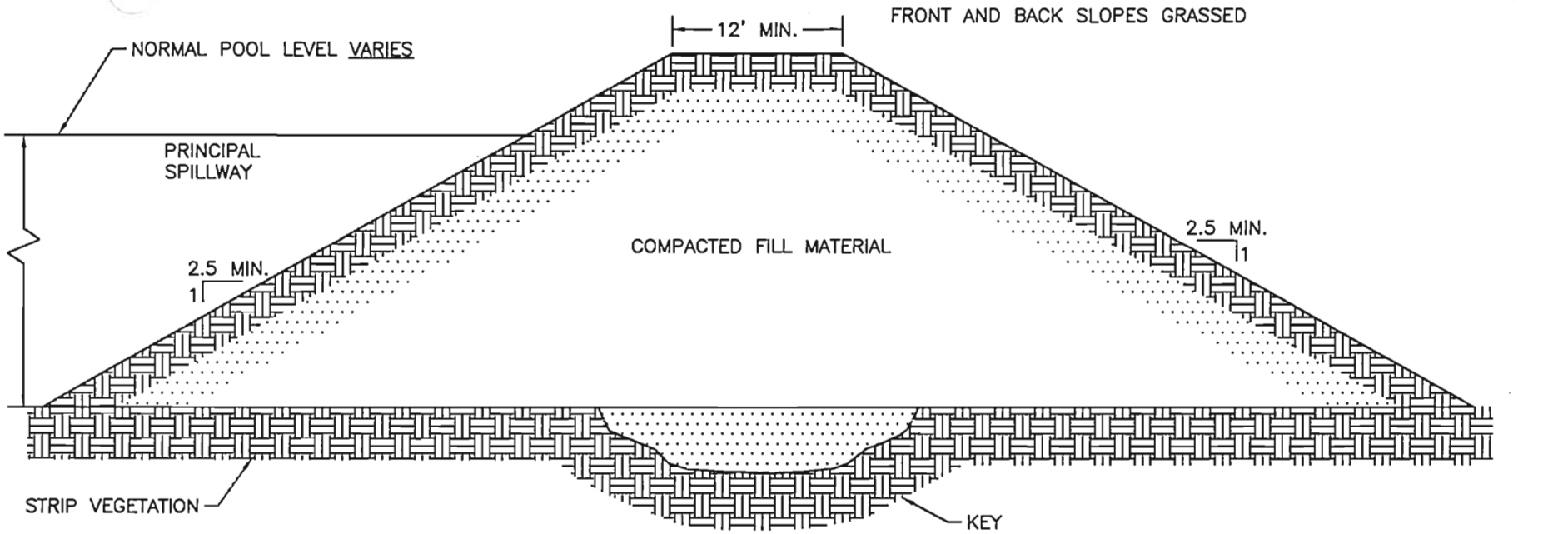

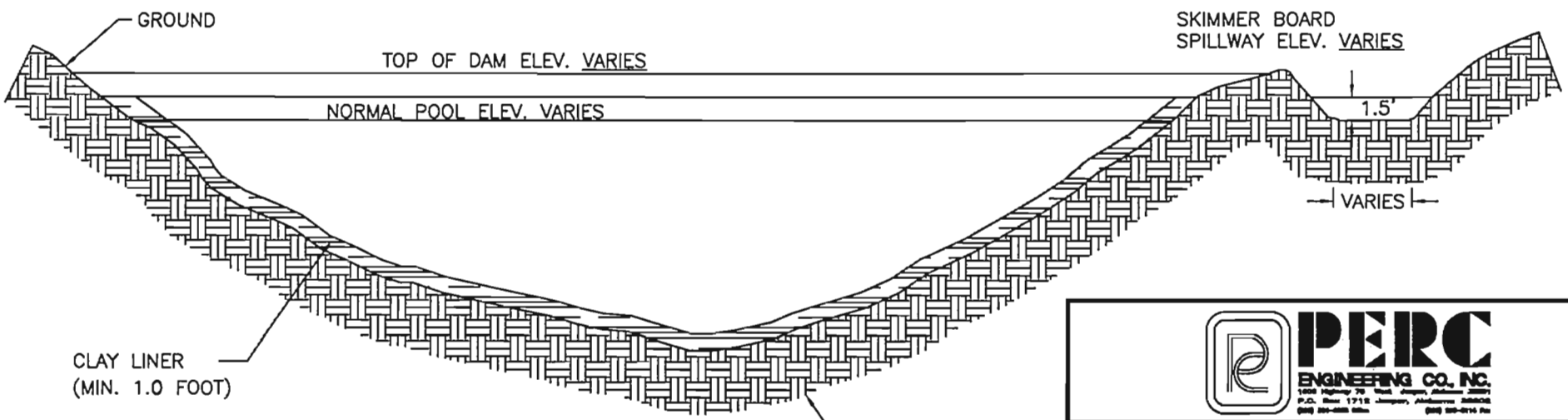

TYPICAL DAM DETAIL
NO SCALE

Lined with 1.0 feet (minimum) of clay material with a permability no greater than 1 X 10^-6 cm/sec up to the emergency spillway elevation to minimize infiltration and to provide a stable pool level with the clay placed in 6" lifts compacted to 95% of standard proctor.

ATTACHMENT III-B-2-A

PERC ENGINEERING CO., INC.

TYPICAL DAM DETAIL WITH CLAY LINER

DRAWN BY:	J.W.T.	DATE:	4/10/2009
DWG. NAME:	TYPICALS		
APPROVED BY:	L.G.S.	SCALE:	NONE

NOTES

Basin 009

1) The primary spillway of Basin 009 will consist of a 10 foot wide open channel lined with 4 inches of concrete reinforced with 6X6–W2.9XW2.9 concrete reinforcement wire. The channel lining will extend back to the existing drainage course. A 12' X 12' X 4" concrete splash pad reinforced with 6X6-W2.9XW2.9 welded wire fabric will be located at the exit point of the tail section of the channel.

2) Basin 009 is to be totally incised from elevation 416.0 down to elevation 398.0. The pool area is to be incised at 2.5H:1V at the existing ground toe elevation of the front slope of the embankment; the remaining pool area is to be incised at a 2H:1V.

3) Due to the Basin 009 being constructed in spoil material, it will be lined with 1.0 feet (minimum) of clay material with a permeability of no greater than 1×10^{-6} cm/sec, up to the emergency spillway elevation to minimize infiltration and to provide a stable pool level with the clay placed in 6" lifts compacted to 95% of standard proctor.

4) Any coal that is found to located within the pool area will excavated during the construction of the basin.

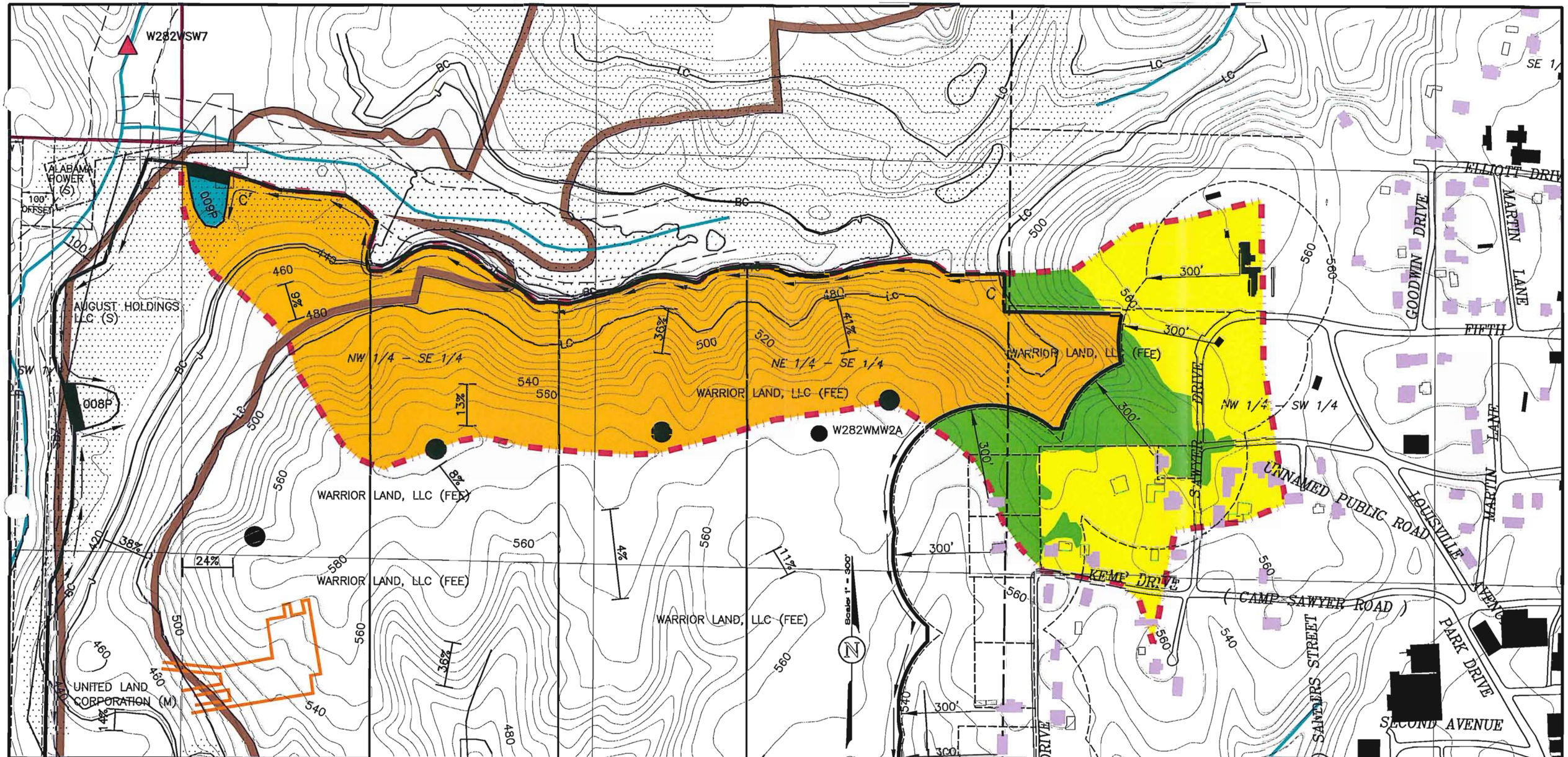

MAP LEGEND

- Permit Boundary
- Surface Contour
- Sediment Basin
- Land Slope Measurement
- EHW — Existing Highwall
- RHW — Reclaimed Highwall
- Diversion Ditch, Berm, or Low Wall
- Area Previously Surface Mined
- Unoccupied Dwelling (Barn, Shed, Etc.)
- Occupied Dwelling
- Commercial Building
- Private Impoundment
- Intermittent Stream
- Perennial Stream
- Drainage Course
- SBZ — Stream Buffer Zone
- Watershed Boundary
- W282WMW2A — Monitoring Well
- W282WSW7 — Suface Water Monitoring Site
- Coal Stockpile/Equipment Storage Area
- County Road (Paved unless otherwise designated)
- Road (Private unless otherwise shown)
- Hal Cook Enterprises, Inc – Warrior Pit (ASMC Permit No. P-3103)
- Pilot Coal Inc. – Warrior Mine No. 1 (Underground Mine) (ASMC Permit No. P-3464)

CURVE NUMBER INFORMATION

- Unmanaged Timberland, Curve Number 70
- Open Spaces, Grassland, or Pastureland, Curve Number 75
- Graded & Bare, Curve Number 81
- Sediment Basin, Curve Number 100

PERC ENGINEERING CO., INC.

Attachment III-B-2(a)
Basin 009 Watershed Map
Warrior 282 LLC
Warrior Mine No. 1
P-3953

DRAWN BY:	J.W.T.	DATE:	09-20-2012
DWG. NAME:	W282B009WS		
APPROVED BY:	L.G.S.	SCALE:	1"=300'

Due to the basin being constructed in spoil material, it will be lined with 1.0 feet (minimum) of clay material with a permeability of no greater than 1 × 10^-6 cm/sec, up to the emergency spillway elevation to minimize infiltration and to provide a stable pool level with the clay placed in 6" lifts compacted to 95% of standard proctor.

Scale: 1" = 50'

N

388
390
392
394
396
398
400
402
404
406
408
410
12'x12'x4" CONCRETE SPLASH PAD
412
414
TOP OF DAM ELEV. 418.1
414
410
416
400
398
10'x28'x4" CONCRETE PRIMARY SPILLWAY INLET ELEV. 415.0
TOP OF SKIMMER BOARD ELEV. 416.5
410
400
398
NORMAL POOL ELEV. 415.0
416
418
420
422
424
426
398
400
410

LEGEND

- MAJOR INFLOW/DIVERSION DITCH
- NORMAL POOL LEVEL ELEV. 415.0
- 412 EXISTING CONTOURS
- 410 PROPOSED FINISHED GRADE
- STREAM BUFFER ZONE 100' OFFSET

PERC ENGINEERING CO., INC.
1426 Highway 78 West Jasper, Alabama 35501
P.O. Box 1712 Jasper, Alabama 35502
(205) 384-5553 Office (205) 295-3114 Fax

Warrior 282 LLC
Warrior Mine No. 1
P-3953
Basin 009
Plan View Location Map

DRAWN BY: J.W.T. DWG. NAME: W282B009PV	DATE: 09-20-2012
APPROVED BY: L.G.S.	SCALE: 1" = 50'

V:\Eng103\Mines\Warrior 282\Basin 009\W282B009PV.dwg 09/20/12 15:53

Skimmer Board Elev. 416.5
Spillway Elev. 415.0
Q Out 84.87 C.F.S.
V Out 2.85 FT/S

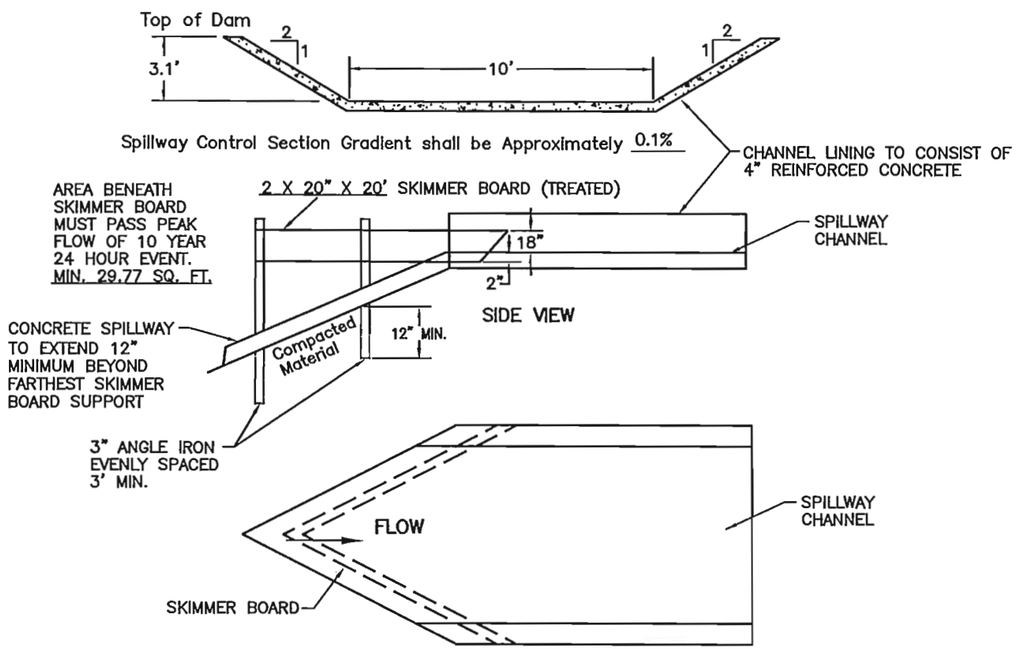

SKIMMER BOARD DETAIL

Spillway Tail Section Gradient shall be Approximately 10%

Notes:

1. The sediment shall be removed from the basin when the accumulated sediment reaches the sediment storage volume.
2. Outer slopes of embankment shall be grassed.
3. Fill material shall be placed in 12" lifts and compacted to 95% of standard proctor.
4. The surface beneath the embankment shall be stripped of undesirable material.
5. Upon completion of mining, reclamation and maintenance of water quality standards the pond will be de-watered and reclaimed.
6. See the attached pond construction criteria.
7. See the attached drawings and specifications for diversions.
8. Elevations are based on assumed datum.
9. Channel lining within the control section of the spillway channel will extend to the maximum water elevation.

Storage Computation

Elevation (feet)	Area (acres)	Avg. Area (acres)	Interval (feet)	Storage (ac.-ft.)	Acc. Storage (ac.-ft.)
398	0.463				0.000
		0.498	2	0.994	
400	0.532				0.994
		0.566	2	1.132	
402	0.600				2.126
		0.635	2	1.269	
404	0.670				3.395
		0.707	2	1.413	
406	0.744				4.808
		0.782	2	1.564	
408	0.820				6.372
		0.860	2	1.718	
410	0.899				8.090
		0.940	2	1.879	
412	0.981				9.969
		1.023	2	2.046	
414	1.065				12.015
		1.109	2	2.217	
416	1.153				14.232
		1.194	2	2.387	
418	1.234				16.619

Key Basin Parameters

Drainage Area ..... 51.0 Acres
Disturbed Area ..... 33.0 Acres
Sediment Storage ..... 3.3 Ac.-Ft.
Detention Storage ..... 9.8 Ac.-Ft.
Normal Pool Capacity ..... 13.1 Ac.-Ft.
Total Basin Capacity ..... 15.5 Ac.-Ft.
Peak Inflow ..... 105.6 C.F.S.
Peak Outflow ..... 84.9 C.F.S.

Stage vs. Storage Curve

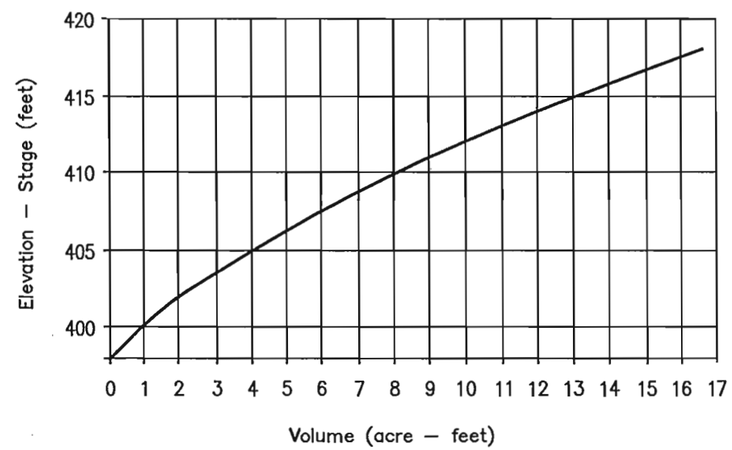

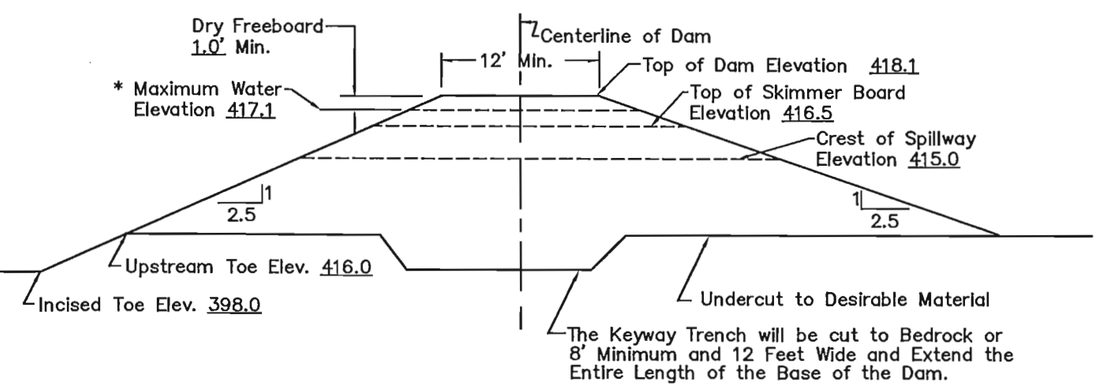

Storm with largest peak flow Either 10 year – 24 hour event or 25 year – 6 hour event.

Typical Cross Section Along Spillway

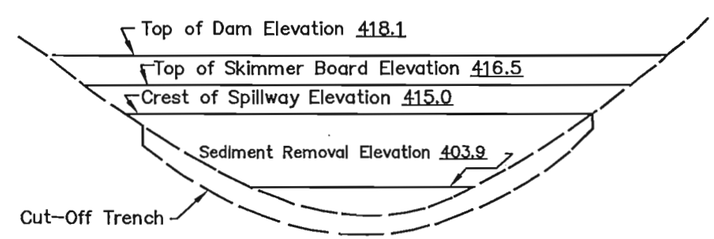

Typical Profile Looking Downstream

Leslie G. Stephens 9/20/2012
Leslie G. Stephens, P.E., P.L.S. Date
AL Registration. #14117-E

PERC ENGINEERING CO., INC.
1906 Highway 78 West Jasper, Alabama 35501
P.O. Box 1712 Jasper, Alabama 35502
(205) 387-1553 Office (205) 387-1591 Fax

WARRIOR 282 LLC
WARRIOR MINE NO. 1
P-3953
BASIN 009 DESIGN DETAILS

DRAWN BY: J.W.T. DWG. NAME: W282B009DT		DATE:	09-20-2012
APPROVED BY: L.G.S.		SCALE:	NONE

X:\Eng105\Lines\Warr-----\Basin 009\W282B009DT.dwg 09/20/12 15:37

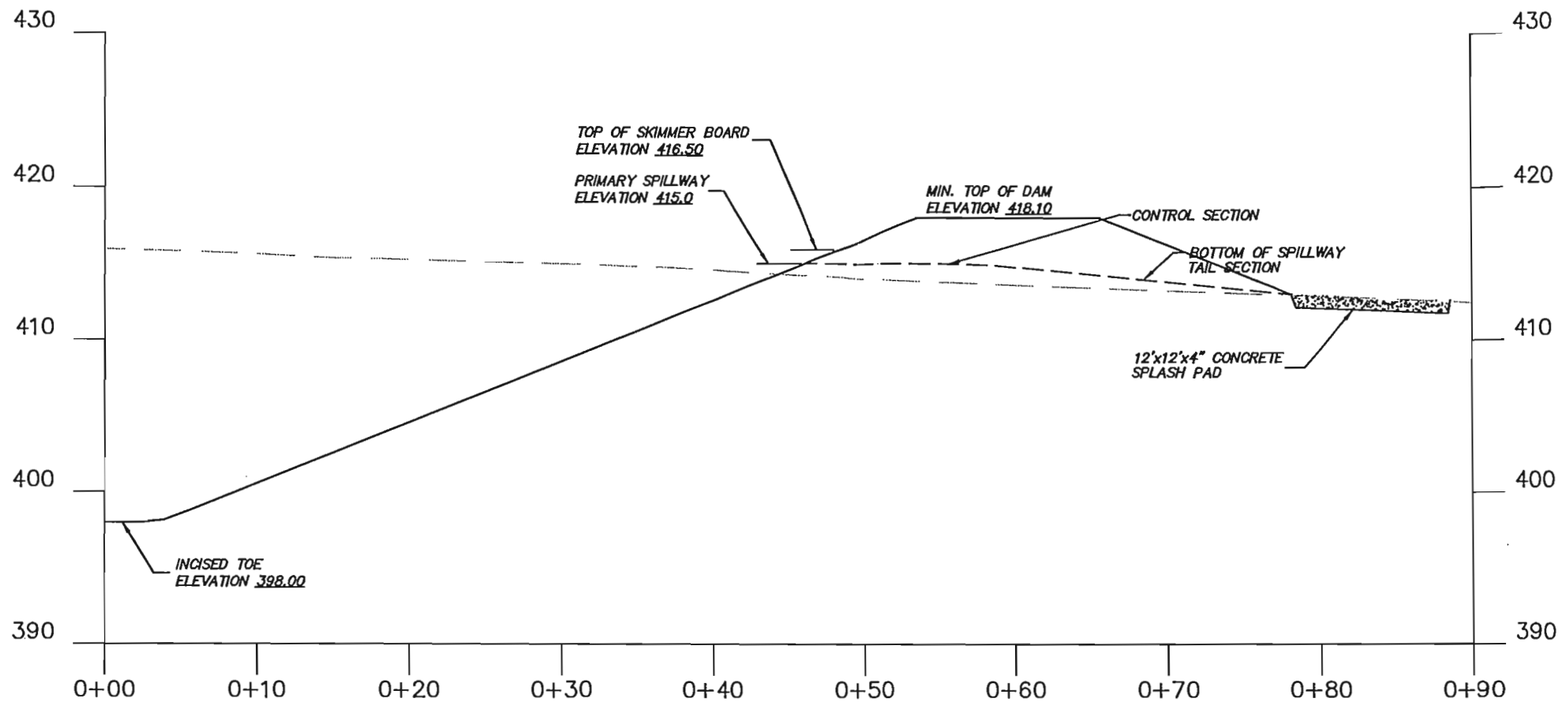

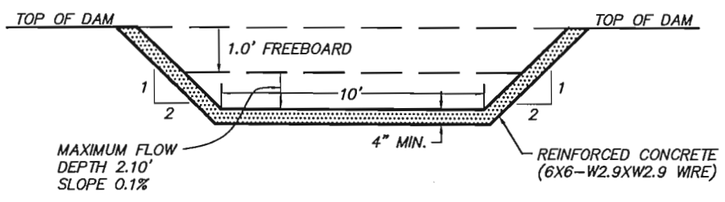

SPILLWAY CONTROL SECTION TYPICAL

N.T.S.

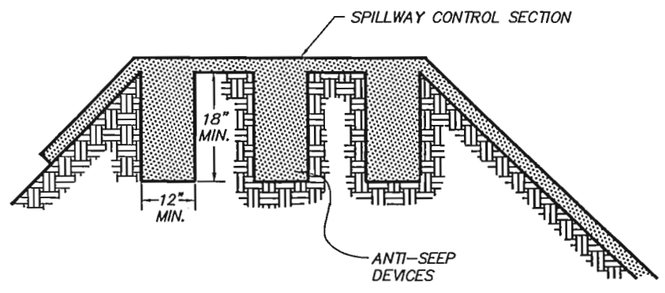

ANTI-SEEP DEVICE TYPICAL

N.T.S.

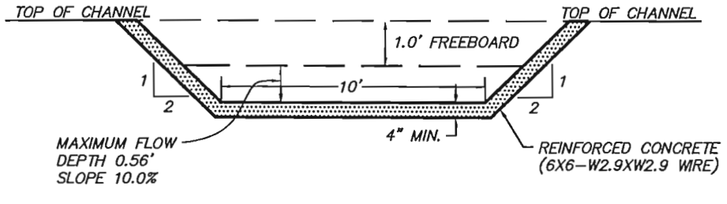

SPILLWAY TAIL DITCH SECTION TYPICAL

N.T.S.

PERC ENGINEERING CO., INC.

WARRIOR 282 LLC
WARRIOR MINE NO. 1
P-3953
BASIN 009
DAM DETAILS

DRAWN BY: J.W.T. DWG. NAME: W282B009DD	DATE: 09/20/2012
APPROVED BY: L.G.S.	SCALE: 1"=10'

V:\Eng125\Mines\Warrior 282\Basin 009\W282B009DD.dwg 09/20/12 15:14

P-3935 Basin 009 Spillway Control Section

Material: Concrete, Rubble

Trapezoidal Channel

Bottom Width (ft)	Left Sideslope Ratio	Right Sideslope Ratio	Slope (%)	Manning's n	Freeboard Depth (ft)	Freeboard % of Depth	Freeboard Mult. x (VxD)
10.00	2.0:1	2.0:1	0.1	0.0220	1.00		

	w/o Freeboard	w/ Freeboard
Design Discharge:	84.87 cfs	
Depth:	2.10 ft	3.10 ft
Top Width:	18.39 ft	22.39 ft
Velocity:	2.85 fps	
X-Section Area:	29.77 sq ft	
Hydraulic Radius:	1.536 ft	
Froude Number:	0.39	

P-3953 Basin 009 Spillway Tail Ditch Section

Material: Concrete, Rubble

Trapezoidal Channel

Bottom Width (ft)	Left Sideslope Ratio	Right Sideslope Ratio	Slope (%)	Manning's n	Freeboard Depth (ft)	Freeboard % of Depth	Freeboard Mult. x (VxD)
10.00	2.0:1	2.0:1	10.0	0.0220	1.00		

	w/o Freeboard	w/ Freeboard
Design Discharge:	84.87 cfs	
Depth:	0.56 ft	1.56 ft
Top Width:	12.25 ft	16.25 ft
Velocity:	13.53 fps	
X-Section Area:	6.27 sq ft	
Hydraulic Radius:	0.501 ft	
Froude Number:	3.33	

Copyright 1998 -2007 Pamela L Schwab

Warrior 282 LLC

Warrior Mine No. 1

P-3953

Basin 009

5.9 Inch, 10 Year- 24 Hour

DRN 58

JWT

PERC Engineering Co., Inc.
PO BOX 1712
Jasper, AL 35503

Phone: 205-384-5553
Email: John.Taylor@percengineering.com

General Information

Storm Information:

Storm Type:	DRN58
Design Storm:	10 yr - 24 hr
Rainfall Depth:	5.900 inches

Particle Size Distribution:

Size (mm)	spoil	topsoil
3.0000	100.000%	100.000%
2.0000	89.800%	96.700%
1.0000	78.700%	85.500%
0.5000	70.300%	74.700%
0.3000	65.000%	69.000%
0.2000	56.700%	63.800%
0.1000	46.200%	56.800%
0.0500	35.200%	51.900%
0.0300	28.400%	49.500%
0.0200	21.200%	43.300%
0.0100	13.000%	20.000%
0.0050	6.500%	13.000%
0.0030	4.900%	6.000%
0.0010	1.600%	2.000%
0.0001	0.200%	0.200%

Structure Networking:

Type	Stru #	(flows into)	Stru #	Musk. K (hrs)	Musk. X	Description
Pond	#1	==>	End	0.000	0.000	Basin 009

#1
Pond

Structure Summary:

		Immediate Contributing Area (ac)	Total Contributing Area (ac)	Peak Discharge (cfs)	Total Runoff Volume (ac-ft)	Sediment (tons)	Peak Sediment Conc. (mg/l)	Peak Settleable Conc. (ml/l)	24VW (ml/l)
#1	In	51.000	51.000	57.50	14.68	3,760.7	295,737	201.23	117.74
	Out			54.92	14.68	334.4	27,160	0.52	0.40

Particle Size Distribution(s) at Each Structure

Structure #1:

Size (mm)	In	Out
3.0000	100.000%	100.000%
2.0000	93.714%	100.000%
1.0000	82.131%	100.000%
0.5000	73.363%	100.000%
0.3000	67.832%	100.000%
0.2000	59.174%	100.000%
0.1000	48.221%	100.000%
0.0500	36.749%	100.000%
0.0300	29.658%	100.000%
0.0200	22.146%	100.000%
0.0100	13.573%	100.000%
0.0050	6.790%	76.353%
0.0030	5.114%	57.512%
0.0010	1.670%	18.780%
0.0001	0.209%	2.347%

Structure Detail:

Structure #1 (Pond)

Basin 009

Pond Inputs:

Initial Pool Elev:	415.00 ft
Initial Pool:	9.80 ac-ft
*Sediment Storage:	3.30 ac-ft
Dead Space:	20.00 %

**Sediment capacity was entered by user*

Emergency Spillway

Spillway Elev	Crest Length (ft)	Left Sideslope	Right Sideslope	Bottom Width (ft)
415.00	12.00	2.00:1	2.00:1	10.00

Pond Results:

Peak Elevation:	416.43 ft
H'graph Detention Time:	0.97 hrs
Pond Model:	CSTRS
Dewater Time:	1.33 days
Trap Efficiency:	91.11 %

Dewatering time is calculated from peak stage to lowest spillway

Elevation-Capacity-Discharge Table

Elevation	Area (ac)	Capacity (ac-ft)	Discharge (cfs)	Dewater Time (hrs)	
403.86	0.665	0.000	0.000		Top of Sed. Storage
404.00	0.670	0.096	0.000		
404.50	0.688	0.435	0.000		
405.00	0.707	0.784	0.000		
405.50	0.725	1.142	0.000		
406.00	0.744	1.509	0.000		
406.50	0.763	1.886	0.000		
407.00	0.782	2.272	0.000		
407.50	0.801	2.667	0.000		
408.00	0.820	3.073	0.000		
408.50	0.839	3.487	0.000		
409.00	0.859	3.912	0.000		

Elevation	Area (ac)	Capacity (ac-ft)	Discharge (cfs)	Dewater Time (hrs)	
409.50	0.879	4.346	0.000		
410.00	0.899	4.791	0.000		
410.50	0.919	5.245	0.000		
411.00	0.940	5.710	0.000		
411.50	0.960	6.185	0.000		
412.00	0.981	6.670	0.000		
412.50	1.002	7.166	0.000		
413.00	1.023	7.672	0.000		
413.50	1.044	8.189	0.000		
414.00	1.065	8.716	0.000		
414.50	1.087	9.254	0.000		
415.00	1.109	9.802	0.000		Spillway #1
415.50	1.131	10.362	2.032	20.00	
416.00	1.153	10.933	27.918	11.30	
416.43	1.170	11.430	54.922	0.55	Peak Stage
416.50	1.173	11.515	59.514		
417.00	1.193	12.106	100.201		
417.50	1.213	12.708	150.727		
418.00	1.234	13.320	211.367		

Detailed Discharge Table

Elevation (ft)	Emergency Spillway (cfs)	Combined Total Discharge (cfs)
403.86	0.000	0.000
404.00	0.000	0.000
404.50	0.000	0.000
405.00	0.000	0.000
405.50	0.000	0.000
406.00	0.000	0.000
406.50	0.000	0.000
407.00	0.000	0.000
407.50	0.000	0.000
408.00	0.000	0.000
408.50	0.000	0.000
409.00	0.000	0.000
409.50	0.000	0.000
410.00	0.000	0.000
410.50	0.000	0.000

Elevation (ft)	Emergency Spillway (cfs)	Combined Total Discharge (cfs)
411.00	0.000	0.000
411.50	0.000	0.000
412.00	0.000	0.000
412.50	0.000	0.000
413.00	0.000	0.000
413.50	0.000	0.000
414.00	0.000	0.000
414.50	0.000	0.000
415.00	0.000	0.000
415.50	2.032	2.032
416.00	27.918	27.918
416.50	59.514	59.514
417.00	100.201	100.201
417.50	150.727	150.727
418.00	211.367	211.367

Subwatershed Hydrology Detail:

Stru #	SWS #	SWS Area (ac)	Time of Conc (hrs)	Musk K (hrs)	Musk X	Curve Number	UHS	Peak Discharge (cfs)	Runoff Volume (ac-ft)
#1	1	12.000	0.062	0.178	0.385	75.000	M	13.43	3.192
	2	6.000	0.098	0.196	0.367	70.000	M	5.90	1.361
	3	32.000	0.251	0.000	0.000	81.000	F	37.68	9.632
	4	1.000	0.001	0.000	0.000	100.000	F	1.55	0.491
	$\sum$	**51.000**						**57.50**	**14.676**

Subwatershed Sedimentology Detail:

Stru #	SWS #	Soil K	L (ft)	S (%)	C	P	PS #	Sediment (tons)	Peak Sediment Conc. (mg/l)	Peak Settleable Conc (ml/l)	24VW (ml/l)
#1	1	0.240	200.00	7.80	0.0100	1.0000	2	2.5	1,017	0.65	0.37
	2	0.240	200.00	26.50	0.0030	1.0000	2	1.6	1,491	0.95	0.54
	3	0.240	200.00	24.70	0.9000	1.0000	1	3,756.7	421,749	287.00	171.35
	4	0.001	100.00	0.01	0.0010	1.0000	1	0.0	0	0.00	0.00
	$\sum$							**3,760.7**	**295,737**	**201.23**	**117.74**

Subwatershed Time of Concentration Details:

Stru #	SWS #	Land Flow Condition	Slope (%)	Vert. Dist. (ft)	Horiz. Dist. (ft)	Velocity (fps)	Time (hrs)
#1	1	3. Short grass pasture	3.00	6.00	200.00	1.380	0.040
		8. Large gullies, diversions, and low flowing streams	4.07	20.00	491.00	6.050	0.022
#1	**1**	**Time of Concentration:**					**0.062**
#1	2	1. Forest with heavy ground litter	6.00	12.00	200.00	0.610	0.091
		8. Large gullies, diversions, and low flowing streams	13.88	44.00	317.00	11.170	0.007
#1	**2**	**Time of Concentration:**					**0.098**
#1	3	5. Nearly bare and untilled, and alluvial valley fans	26.50	53.00	200.00	5.140	0.010
		8. Large gullies, diversions, and low flowing streams	1.46	46.00	3,152.00	3.620	0.241
#1	**3**	**Time of Concentration:**					**0.251**

Subwatershed Muskingum Routing Details:

Stru #	SWS #	Land Flow Condition	Slope (%)	Vert. Dist. (ft)	Horiz. Dist. (ft)	Velocity (fps)	Time (hrs)
#1	1	8. Large gullies, diversions, and low flowing streams	3.57	130.00	3,641.00	5.660	0.178
#1	**1**	**Muskingum K:**					**0.178**
#1	2	8. Large gullies, diversions, and low flowing streams	2.46	82.00	3,330.00	4.700	0.196
#1	**2**	**Muskingum K:**					**0.196**

Copyright 1998 -2007 Pamela J. Schwab

Warrior 282 LLC

Warrior Mine No. 1

P-3953

Basin 009

4.8 Inch, 25 Year-6 Hour

SCS 6 Hour

JWT

PERC Engineering Co., Inc.
PO BOX 1712
Jasper, AL 35503

Phone: 205-384-5553
Email: John.Taylor@percengineering.com

General Information

Storm Information:

Storm Type:	Rainfall Event

Accumulated Time (hrs)	Accumulated Depth (in)
0.00	0.0000
0.50	0.1680
1.00	0.3840
1.50	0.6480
2.00	1.1040
2.50	2.8800
3.00	3.3600
3.50	3.7440
4.00	4.0080
4.50	4.2480
5.00	4.4400
5.50	4.6320
6.00	4.8000

Peak 30-minute Intensity: 3.552 in/hr

Particle Size Distribution:

Size (mm)	spoil	topsoil
3.0000	100.000%	100.000%
2.0000	89.800%	96.700%
1.0000	78.700%	85.500%
0.5000	70.300%	74.700%
0.3000	65.000%	69.000%
0.2000	56.700%	63.800%
0.1000	46.200%	56.800%
0.0500	35.200%	51.900%
0.0300	28.400%	49.500%
0.0200	21.200%	43.300%
0.0100	13.000%	20.000%
0.0050	6.500%	13.000%
0.0030	4.900%	6.000%

Size (mm)	spoil	topsoil
0.0010	1.600%	2.000%
0.0001	0.200%	0.200%

Structure Networking:

Type	Stru #	(flows into)	Stru #	Musk. K (hrs)	Musk. X	Description
Pond	#1	==>	End	0.000	0.000	Basin 009

#1
Pond

Structure Summary:

		Immediate Contributing Area (ac)	Total Contributing Area (ac)	Peak Discharge (cfs)	Total Runoff Volume (ac-ft)	Sediment (tons)	Peak Sediment Conc. (mg/l)	Peak Settleable Conc. (ml/l)	24VW (ml/l)
#1	In	51.000	51.000	105.58	10.75	4,480.3	407,477	273.99	180.99
	Out			84.87	10.75	465.6	40,777	1.01	0.92

Particle Size Distribution(s) at Each Structure

Structure #1:

Size (mm)	In	Out
3.0000	100.000%	100.000%
2.0000	100.000%	100.000%
1.0000	88.445%	100.000%
0.5000	79.003%	100.000%
0.3000	73.046%	100.000%
0.2000	63.723%	100.000%
0.1000	51.928%	100.000%
0.0500	39.573%	100.000%
0.0300	31.937%	100.000%
0.0200	23.847%	100.000%
0.0100	14.616%	100.000%
0.0050	7.311%	70.358%
0.0030	5.507%	52.999%
0.0010	1.798%	17.306%
0.0001	0.225%	2.163%

Structure Detail:

Structure #1 (Pond)

Basin 009

Pond Inputs:

Initial Pool Elev:	415.00 ft
Initial Pool:	9.80 ac-ft
*Sediment Storage:	3.30 ac-ft
Dead Space:	20.00 %

**Sediment capacity was entered by user*

Emergency Spillway

Spillway Elev	Crest Length (ft)	Left Sideslope	Right Sideslope	Bottom Width (ft)
415.00	12.00	2.00:1	2.00:1	10.00

Pond Results:

Peak Elevation:	416.81 ft
H'graph Detention Time:	0.65 hrs
Pond Model:	CSTRS
Dewater Time:	1.00 days
Trap Efficiency:	89.61 %

Dewatering time is calculated from peak stage to lowest spillway

Elevation-Capacity-Discharge Table

Elevation	Area (ac)	Capacity (ac-ft)	Discharge (cfs)	Dewater Time (hrs)	
403.86	0.665	0.000	0.000		Top of Sed. Storage
404.00	0.670	0.096	0.000		
404.50	0.688	0.435	0.000		
405.00	0.707	0.784	0.000		
405.50	0.725	1.142	0.000		
406.00	0.744	1.509	0.000		
406.50	0.763	1.886	0.000		
407.00	0.782	2.272	0.000		
407.50	0.801	2.667	0.000		
408.00	0.820	3.073	0.000		
408.50	0.839	3.487	0.000		
409.00	0.859	3.912	0.000		

Elevation	Area (ac)	Capacity (ac-ft)	Discharge (cfs)	Dewater Time (hrs)	
409.50	0.879	4.346	0.000		
410.00	0.899	4.791	0.000		
410.50	0.919	5.245	0.000		
411.00	0.940	5.710	0.000		
411.50	0.960	6.185	0.000		
412.00	0.981	6.670	0.000		
412.50	1.002	7.166	0.000		
413.00	1.023	7.672	0.000		
413.50	1.044	8.189	0.000		
414.00	1.065	8.716	0.000		
414.50	1.087	9.254	0.000		
415.00	1.109	9.802	0.000		Spillway #1
415.50	1.131	10.362	2.032	20.05	
416.00	1.153	10.933	27.918	2.95	
416.50	1.173	11.515	59.514	0.90	
416.81	1.186	11.883	84.869	0.20	Peak Stage
417.00	1.193	12.106	100.201		
417.50	1.213	12.708	150.727		
418.00	1.234	13.320	211.367		

Detailed Discharge Table

Elevation (ft)	Emergency Spillway (cfs)	Combined Total Discharge (cfs)
403.86	0.000	0.000
404.00	0.000	0.000
404.50	0.000	0.000
405.00	0.000	0.000
405.50	0.000	0.000
406.00	0.000	0.000
406.50	0.000	0.000
407.00	0.000	0.000
407.50	0.000	0.000
408.00	0.000	0.000
408.50	0.000	0.000
409.00	0.000	0.000
409.50	0.000	0.000
410.00	0.000	0.000
410.50	0.000	0.000

Elevation (ft)	Emergency Spillway (cfs)	Combined Total Discharge (cfs)
411.00	0.000	0.000
411.50	0.000	0.000
412.00	0.000	0.000
412.50	0.000	0.000
413.00	0.000	0.000
413.50	0.000	0.000
414.00	0.000	0.000
414.50	0.000	0.000
415.00	0.000	0.000
415.50	2.032	2.032
416.00	27.918	27.918
416.50	59.514	59.514
417.00	100.201	100.201
417.50	150.727	150.727
418.00	211.367	211.367

Subwatershed Hydrology Detail:

Stru #	SWS #	SWS Area (ac)	Time of Conc (hrs)	Musk K (hrs)	Musk X	Curve Number	UHS	Peak Discharge (cfs)	Runoff Volume (ac-ft)
#1	1	12.000	0.062	0.178	0.385	75.000	M	26.94	2.275
	2	6.000	0.098	0.196	0.367	70.000	M	11.28	0.938
	3	32.000	0.251	0.000	0.000	81.000	F	69.54	7.135
	4	1.000	0.001	0.000	0.000	100.000	F	3.58	0.399
	$\sum$	**51.000**						**105.58**	**10.747**

Subwatershed Sedimentology Detail:

Stru #	SWS #	Soil K	L (ft)	S (%)	C	P	PS #	Sediment (tons)	Peak Sediment Conc. (mg/l)	Peak Settleable Conc (ml/l)	24VW (ml/l)
#1	1	0.240	200.00	7.80	0.0100	1.0000	2	3.1	1,617	1.03	0.63
	2	0.240	200.00	26.50	0.0030	1.0000	2	1.8	2,382	1.52	0.91
	3	0.240	200.00	24.70	0.9000	1.0000	1	4,475.4	566,876	381.21	257.13
	4	0.001	100.00	0.01	0.0010	1.0000	1	0.0	0	0.00	0.00
	$\sum$							**4,480.3**	**407,477**	**273.99**	**180.99**

Subwatershed Time of Concentration Details:

Stru #	SWS #	Land Flow Condition	Slope (%)	Vert. Dist. (ft)	Horiz. Dist. (ft)	Velocity (fps)	Time (hrs)
#1	1	3. Short grass pasture	3.00	6.00	200.00	1.380	0.040
		8. Large gullies, diversions, and low flowing streams	4.07	20.00	491.00	6.050	0.022
#1	**1**	**Time of Concentration:**					**0.062**
#1	2	1. Forest with heavy ground litter	6.00	12.00	200.00	0.610	0.091
		8. Large gullies, diversions, and low flowing streams	13.88	44.00	317.00	11.170	0.007
#1	**2**	**Time of Concentration:**					**0.098**
#1	3	5. Nearly bare and untilled, and alluvial valley fans	26.50	53.00	200.00	5.140	0.010
		8. Large gullies, diversions, and low flowing streams	1.46	46.00	3,152.00	3.620	0.241
#1	**3**	**Time of Concentration:**					**0.251**

Subwatershed Muskingum Routing Details:

Stru #	SWS #	Land Flow Condition	Slope (%)	Vert. Dist. (ft)	Horiz. Dist. (ft)	Velocity (fps)	Time (hrs)
#1	1	8. Large gullies, diversions, and low flowing streams	3.57	130.00	3,641.00	5.660	0.178
#1	**1**	**Muskingum K:**					**0.178**
#1	2	8. Large gullies, diversions, and low flowing streams	2.46	82.00	3,330.00	4.700	0.196
#1	**2**	**Muskingum K:**					**0.196**