HYDROLOGY STUDY FOR
SHANNON, LLC

SHANNON MINE NO. 4

P-3959

JEFFERSON COUNTY, ALABAMA

BY

DRUMMOND COMPANY, INC.

3000 HIGHWAY 78 EAST

JASPER, ALABAMA 35501

FEBRUARY 16, 2012

Post Office Box 1549
Jasper, Alabama 35502-1549

Telephone: (205) 387-0501

DRUMMOND COMPANY, INC.

February 17, 2012

Mr. Michael Harrison, P.E.
Alabama Surface Mining Commission
Post Office Box 2390
Jasper, Alabama 35502-2390

RE: Shannon, LLC
Shannon Mine No. 4
P-3959

Dear Michael:

I hereby certify the attached detailed design plans for Basin 008 and the detailed re-evaluation design plans for Basins 002, 002B, 003, 003A, 008A, and 009 for the above referenced mines are in accordance with the Regulations of the Alabama Surface Mining Commission as adopted by Act 81-435 of December 18, 1981 and amended to date, and are true and correct to the best of my knowledge and belief.

If you have any questions or required additional information, please feel free to call.

Sincerely,
Drummond Company, Inc.

ALABAMA REGISTERED NO. 18213 PROFESSIONAL ENGINEER STEVEN R. INGLE

Steven R. Ingle, P.E.
Alabama Registration No. 18213

POND CONSTRUCTION CRITERIA

The embankment for sediment basins (temporary and permanent) shall be designed and built using the following as minimum criteria:

1. The top of the dam shall be no less than 12 feet wide.

2. See design sheet for maximum and minimum embankment slopes.

3. The foundation and abutments for the impounding structure shall be designed to be stable under all conditions of construction and operation of the impoundments, with a minimum static safety factor of 1.5 for the normal pool with steady seepage saturation conditions, and a seismic safety factor of at least 1.20.

4. The dam shall be constructed with a cutoff trench based upon prudent engineering practices for the site. The cutoff shall be located on the dam centerline and be of sufficient depth to extend into a relatively impervious material from which the core of the dam shall also be constructed.

5. The embankment foundation area shall be cleared of all organic matter, all surfaces sloped to no steeper than 1v:1h, and the entire foundation surface scarified.

6. The entire embankment and cutoff trench shall be compacted to 95 percent density, based on standard proctor as outlined in ASTM.

7. The material placed in the embankment shall be free of sod, roots, stones over 6 inches in diameter, and other objectionable materials. The fill material shall be placed and spread over the entire fill area, starting at the lowest point of the foundation, in layers not to exceed 12 inches in thickness. Construction of the fill shall be undertaken only at such times that the moisture content of the fill material will permit satisfactory compaction in accordance with paragraph 6.

8. The pool area of the basin will be cleared of timber and large undergrowth.

9. The primary decant system when consisting of a pipe shall be installed according to Class C pipe installation for embankment bedding.

10. The primary decant system shall be equipped with a device, or constructed, such as to insure that subsurface withdrawal is accomplished to prevent discharge of floating solids. If a channel is used as the primary decant, a skimmer shall be installed to prevent floating solids from discharging.

11. A splash pad or riprap may be required under the discharge of the primary decant system where necessary to insure that the discharge does not erode the embankment.

12. The combination primary and secondary decant system shall be designed to safely carry

the expected peak flow from a 25-year, 6-hour storm. The entire emergency overflow spillway channel will be a stabilized channel that will be stabilized upon completion of construction as specified within the detailed design plans using prudent engineering measures. These measures may consist of lining the spillway with concrete or a durable rock riprap, or the spillway being constructed in consolidated, non-erodible material and planted with a mixture of both annual and perennial grasses, or a combination of any or all of the above.

13. Sediment basins using a single spillway system shall be an open channel of non-erodible construction consisting of concrete, durable rock riprap or its being constructed in consolidated non-erodible material as specified in the detailed design plans.

14. The settled embankment height for permanent and temporary impoundments shall be a minimum of 1.0 foot above the maximum water elevation for the runoff from either a 25-year/6-hour or a 10-year/24-hour precipitation event (whichever has the greatest runoff).

15. If basins are built in series, then the combined decant system for each basin shall be designed to accommodate the entire contributing drainage area.

16. The dam and all disturbed areas shall be seeded with both perennial and annual grasses, fertilized and mulched in order to insure erosion is minimized. Hay bales or riprap may be placed at the toe of the dam immediately upon completion of construction.

17. The constructed height of the dam shall be increased a minimum of 5 percent over the design height to allow for settlement during the life of the embankment.

18. Final graded slopes of the entire permanent water impoundment area shall not exceed 2.5H-1.0V to provide for adequate safety and access for proposed water users.

19. Prior to Phase II bond release, additional data concerning water quality, water quantity, depth, size, configuration, post-mining land use, etc., for each proposed permanent water impoundment, shall be submitted to the Regulatory Authority for permanent water impoundment approval.

20. All sediment basins will be inspected for stability, erosion, etc., two (2) times a month until removal of the structure or release of the reclamation bond.

21. The embankment and spillway will be maintained by repairing any damage such as erosion, slope failure or spillway damage until removal of the structure or release of the performance bond.

22. All ponds shall be examined quarterly for structural weakness, instability, erosion, or other hazardous conditions and maintenance performed as necessary. Formal inspections shall be made on an annual basis, including any reports or modifications, in accordance with 880-X-10C-.20[1(j)] of the Alabama Surface Mining Commission Regulations.

23. Sediment will be removed from each pond when the accumulated sediment reaches the sediment storage volume as shown on the detailed design sheet.

24. Upon completion of mining, successful reclamation and effluent standards being met, each sediment basin not remaining as a permanent water impoundment will be dewatered in an environmentally safe manner (such as siphoning, pumping, etc.) and reclaimed to approximate original contours by the following procedure: A permanent diversion channel (designed for a 10-year, 24-hour precipitation event) shall be cut along the outer edge of the basin to re-route drainage around the basin and back through the stabilized spillway to allow reclamation of the sediment basin. The diversion channel shall be designed and grassed as per enclosed information. (See permanent diversion for basin disposal.) Upon completion of the diversion channel, the back slope of the dam shall be graded to a minimum 3H to 1V slope. The dewatered sediment basin area shall be seeded with some combination of the following: fescue, Bermuda, rye grass, canary grass and willows. After seeding, the area shall be mulched. Any additional sediment or embankment material not used to meet original contour, if non-toxic, shall be spread in thin layers within the permit area and vegetated as stated in the approved reclamation plan. All toxic material encountered in the basin disposal shall be buried and covered with 4 feet of non-toxic material and vegetated as stated in the approved reclamation plan.

25. A qualified registered professional engineer or other qualified professional specialist, under the direction of the professional engineer shall conduct regular inspections during construction and upon completion shall inspect each basin for certification purposes.

26. Point source discharge embankments shall be constructed and abutments keyed into desirable material if at all possible. In the event that undesirable material is encountered, additional design and construction criteria shall be submitted prior to certification.

G:\Todd Odom\PTO\S\Drummond ASMC Typical Dwgs\Embankment Pond Planview.dwg 12/15/11 07:30

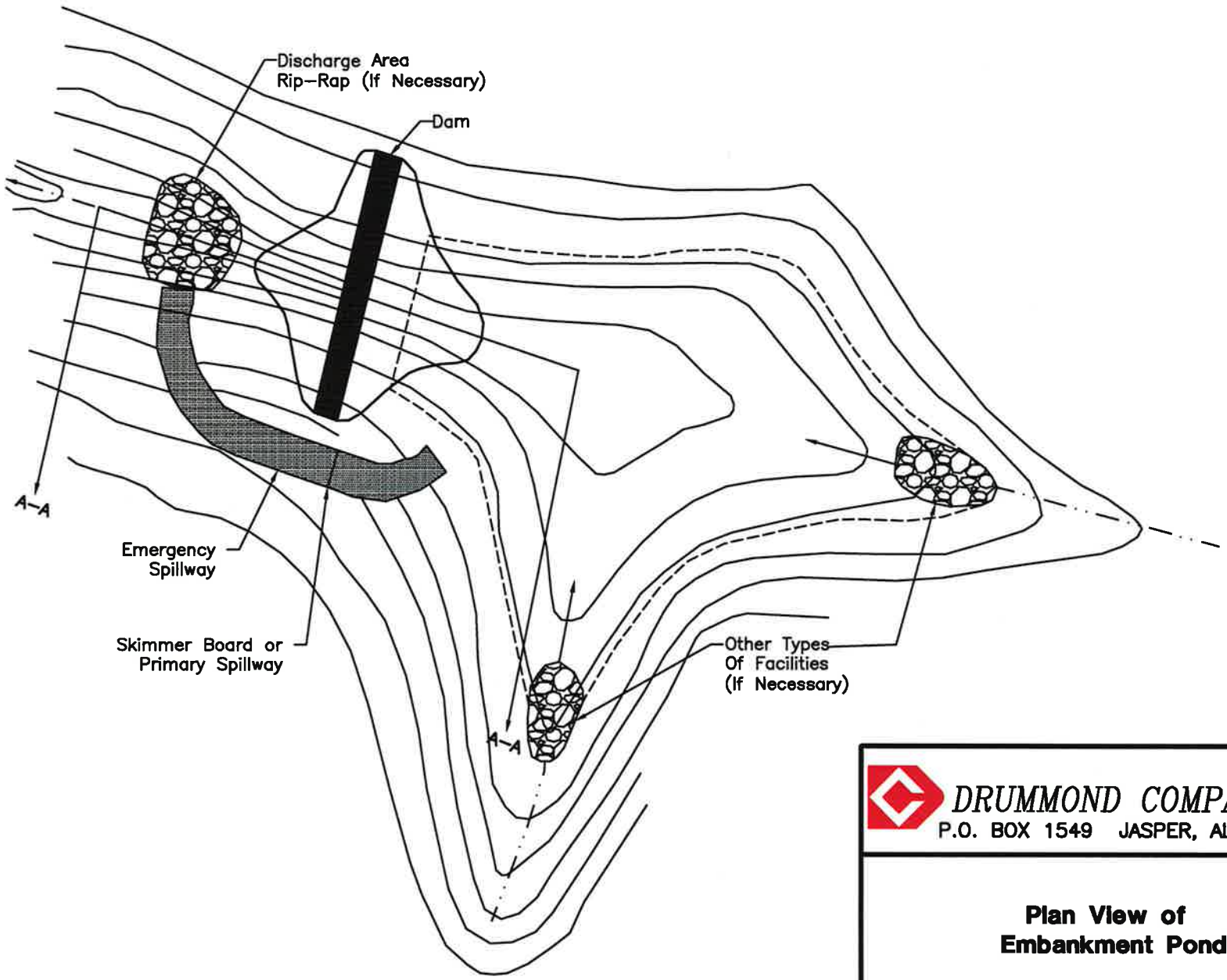

Plan View Of Embankment Pond

Attachment III-B-2(a)

DRUMMOND COMPANY, INC.
P.O. BOX 1549 JASPER, AL 35502

Plan View of Embankment Pond

DRAWN BY: – DWG. NAME: –	DATE: –
APPROVED BY: –	SCALE: –

G:\Todd Odom\PTO\S\Drummond ASMC Typical Dwgs\Typical Dam Detail (1).dwg 12/15/11 08:03

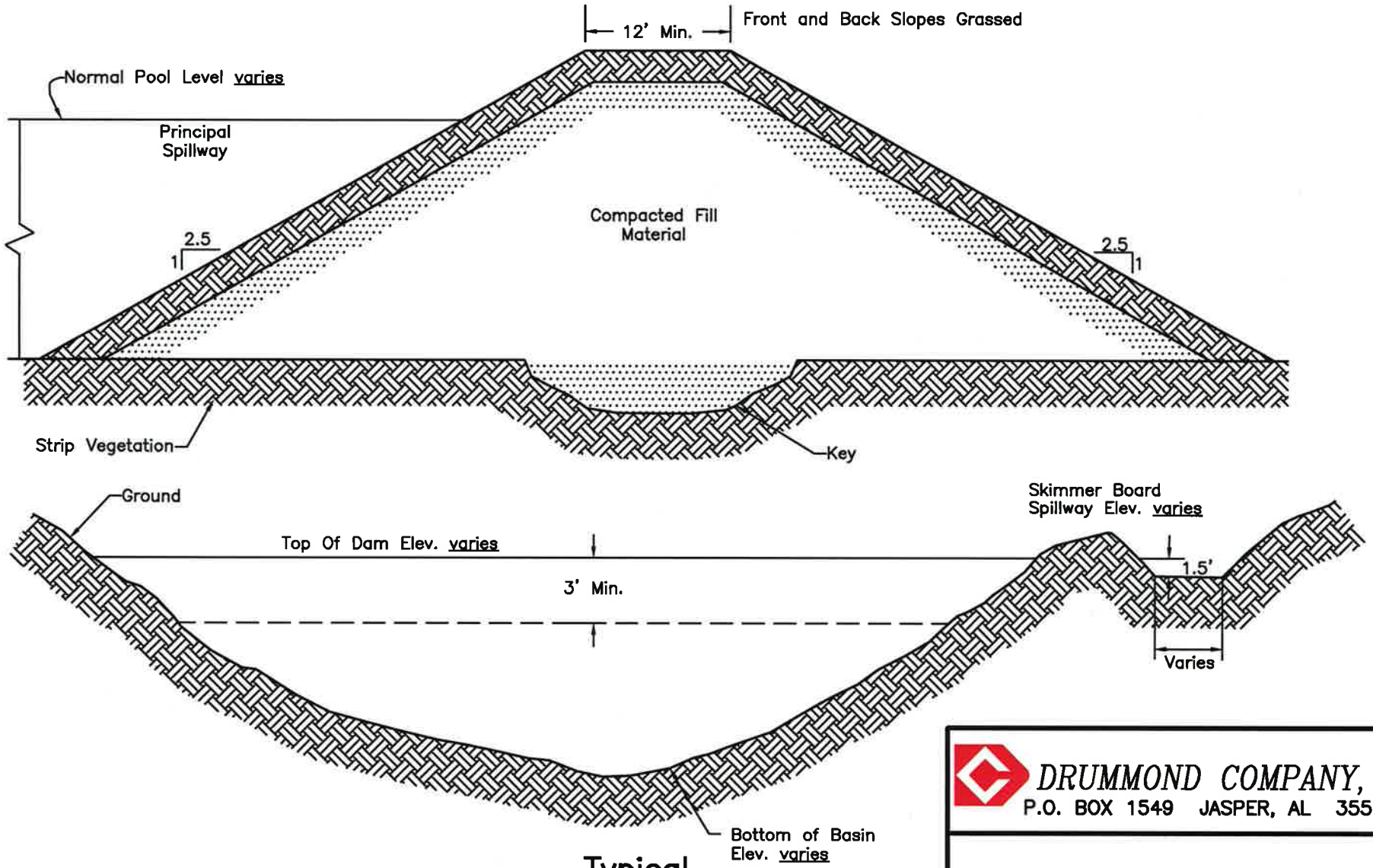

Typical Dam Detail No Scale

DRUMMOND COMPANY, INC.
P.O. BOX 1549 JASPER, AL 35502

Typical Dam Detail

DRAWN BY: – DWG. NAME: –	DATE: –
APPROVED BY: –	SCALE: –

Attachment III-B-2(a)

G:\Todd Odom\PTO\S\Drummond ASMC Typical Dwgs\Typical Dam Detail (2).dwg 12/15/11 08:05

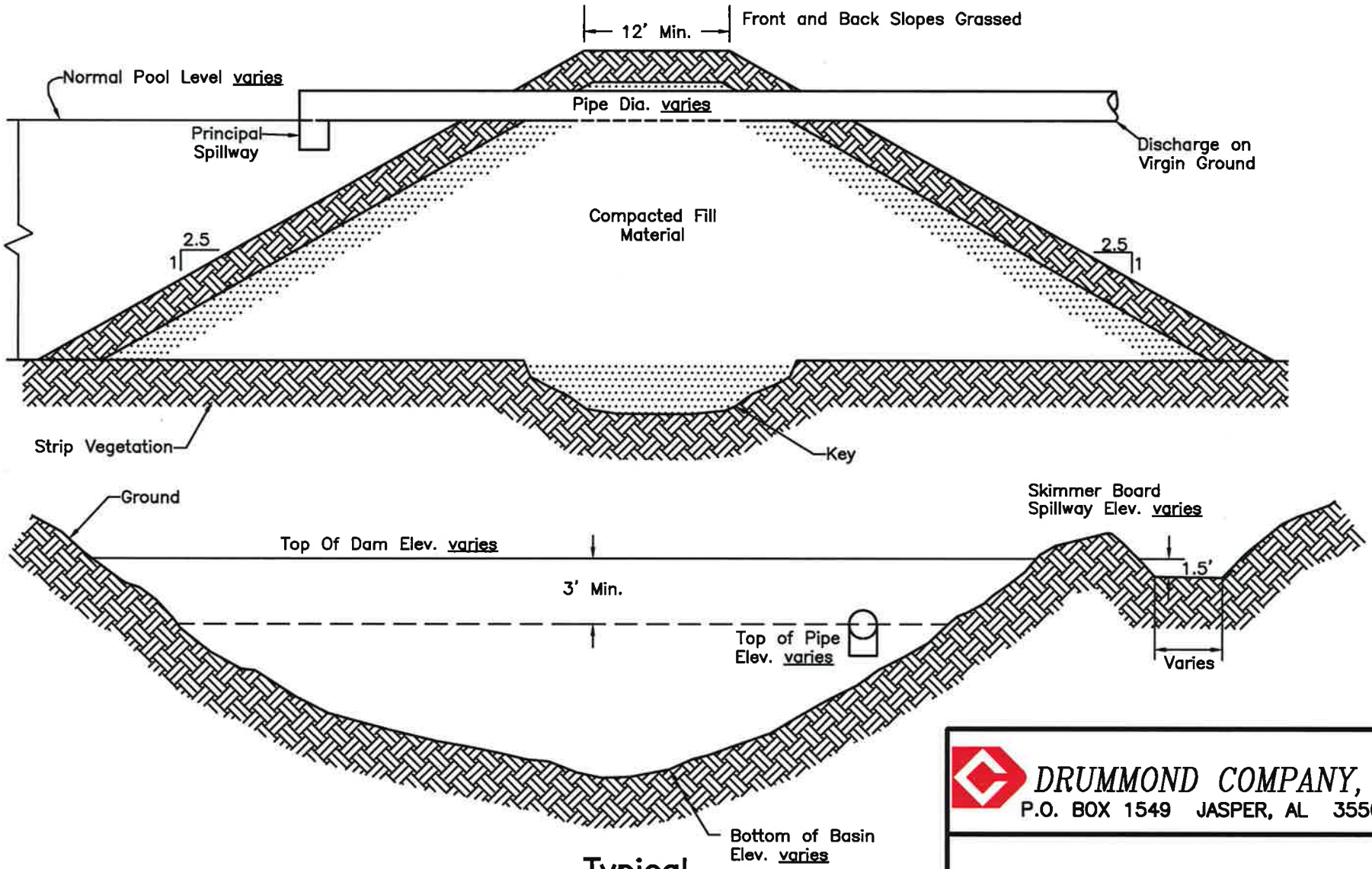

Typical
Dam Detail
No Scale

DRUMMOND COMPANY, INC.
P.O. BOX 1549 JASPER, AL 35502

Typical Dam Detail

DRAWN BY: – DWG. NAME: –	DATE: –
APPROVED BY: –	SCALE: –

Attachment III-B-2(a)

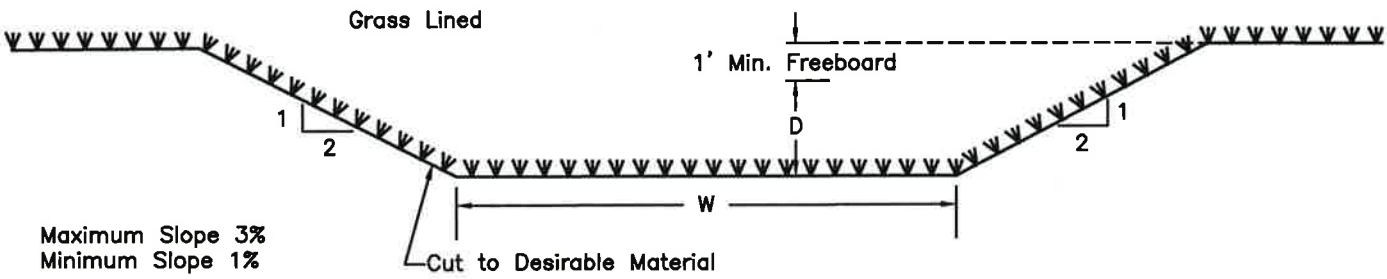

Maximum Slope 3%
Minimum Slope 1%

$$Q = \frac{1.49}{N} A R^{2/3} S^{2/3}$$

N(loose stone or grass lined) = 0.035
A = area
R = area/wetted perimeter
S = slope

* Grass Lining: fescue, bermuda, rye grass

Diversion Channel Depth (D) For Width (W) 8.0 Ft.	
Peak Flow Q (CFS)	Depth D (Ft.)
0–15	0.5
15–50	1.0
50–100	1.5
100–180	2.0
180–270	2.5

Diversion Channel Depth (D) For Width (W) 10.0 Ft.	
Peak Flow Q (CFS)	Depth D (Ft.)
0–15	0.5
15–60	1.0
60–120	1.5
120–210	2.0
210–320	2.5

Diversion Channel Depth (D) For Width (W) 12.0 Ft.	
Peak Flow Q (CFS)	Depth D (Ft.)
0–20	0.5
20–70	1.0
70–150	1.5
150–250	2.0
250–383	2.5

Diversion Channel Depth (D) For Width (W) 15.0 Ft.	
Peak Flow Q (CFS)	Depth D (Ft.)
0–25	0.5
25–90	1.0
90–180	1.5
180–300	2.0
300–450	2.5

DRUMMOND COMPANY, INC.
P.O. BOX 1549 JASPER, AL 35502

Permanent Diversion Channel For Basin Disposal

DRAWN BY: – DWG. NAME: –	DATE: –
APPROVED BY: –	SCALE: –

Attachment III-B-2(a)

G:\Todd Odom\PROJS\Drummond ASMC Tarlton Dam\Permanent Diversion Channel for Basin Disposal.dwg 12/15/11 07:39

NOTES

1) The primary spillway of Basin 002 will consist of a block/skimmerboard system with a 120 foot wide open channel lined with 4 inches of concrete reinforced with standard concrete reinforcement wire. The channel lining extends back to the existing drainage course.

2) Modifications to Basin 002 required as a result of theses re-evaluation design plans consist of the increase in the top of dam elevation by 0.7 feet from 508 to 508.7, the increase in the primary spillway elevation, top of block, by 2.5 feet from 504 to 506.5, and the installation of a 3 inch diameter PVC fixed siphon tube to the lines and grades as shown.

3) The primary spillway of Basin 002B will consist of a 35 foot wide open channel lined with 4 inches of concrete reinforced with standard concrete reinforcement wire. The channel lining extends back to the existing drainage course.

4) Modifications to Basin 002B required as a result of theses re-evaluation design plans consist of the increase in the top of dam elevation by 1.7 feet from 523 to 524.7 and the removal of the existing beaver dam from the spillway system.

5) The primary spillway of Basin 003 will consist of a block/skimmerboard system with a 38 foot wide open channel lined with 4 inches of concrete reinforced with standard concrete reinforcement wire. The channel lining extends back to the existing drainage course.

6) Modifications to Basin 003 required as a result of theses re-evaluation design plans consist of the increase in the top of skimmerboard elevation by 0.1 feet from 403.6 to 430.7. During the construction of Basin 003 the top of skimmerboard elevation was increased by 0.4 feet. With this in mind no field modifications to Basin 003 required as a result of these re-evaluation design plans.

7) The primary spillway of Basin 003A will consist of a 15 foot wide open channel lined with 4 inches of concrete reinforced with standard concrete reinforcement wire. The channel lining extends back to the existing drainage course.

8) Modifications to Basin 003A required as a result of theses re-evaluation design plans consist of the increase in the top of dam elevation by 0.8 feet from 523.9 to 524.7 and the removal of the existing beaver dam from the spillway system.

9) The primary spillway of Basin 008A will consist of a block system with a 35 foot wide open channel lined with 4 inches of concrete reinforced with standard concrete reinforcement wire. The channel lining extends back to the existing drainage course.

10) Modifications to Basin 008A required as a result of theses re-evaluation design plans consist of the removal of the existing skimmerboard system. Also, due to the gentle slope of the hollow containing Basins 008A and Basin 008, the impounded water of Basin 008 will be allowed to lie upon the downstream slope of Basin 008A.

To provide slope stability and control erosion caused by wave action of Basin 008, the surface of the downstream slope of the embankment of Basin 008A will be lined with Class 1 sandstone or limestone rip-rap underlain by Marifi 500X or equivalent silt fencing to a minimum elevation of 451.1, or the maximum water level of Basin 008 plus 1 foot of freeboard.

11) The primary spillway of Basin 008 will consist of a 15 foot wide open channel lined with 4 inches of concrete reinforced with standard concrete reinforcement wire. The channel lining will extend back to the existing drainage course. A 15' x 10' x 4" concrete splash pad will be located at the exit point of the tail section of the channel.

12) The gradient of the control section of the primary spillway of Basin 008 will be from 0 % to 5 %. A transition section of a minimum of 10 feet will be constructed to transition from the control section to the tail section. The gradient of the transition section will be from 5 % to 40 %. The gradient of the entire tail section of the spillway will be approximately 40 %.

13) The primary spillway of Basin 009 will consist of a block/skimmerboard system with a 20 foot wide open channel lined with 4 inches of concrete reinforced with standard concrete reinforcement wire. The channel lining extends back to the existing drainage course.

14) Modifications to Basin 009 required as a result of theses re-evaluation design plans consist of the installation of a 3 inch diameter PVC fixed siphon tube to the lines and grades as shown.

15) In an effort to prove effluent compliance all basins were evaluated for a 10 Year - 24 Hour precipitation event utilizing SEDCAD 4, with a sediment removal level below that as shown as the sediment removal level within the detailed design plans. The computer output is available for regulatory review if necessary. The following is a summary of the above evaluation:

Basin Number	Design Sediment Removal Level	Design Effluent 10 Year - 24 Hour Event	Evaluated Sediment Removal Level	Evaluated Effluent 10 Year - 24 Hour Event
002B	520.5	N/A	516.5	N/A
002	502	0.0 ml/l	500	0.0 ml/l
003A	519.5	N/A	507	N/A
003	500.8	0.22 ml/l	498	0.29 m/l
008A	468.5	N/A	464	N/A
008	447	0.09 ml/l	445	0.31 ml/l
009	443	0.0 m/l	432	0.0 ml/l

RIP-RAP CLASSIFICATION SPECIFICATIONS

CLASS 1 RIP-RAP

No more than 10% of the stone will have a diameter greater than twelve (12) inches; no more than 50% of the stone will have a diameter less than ten (10) inches; and no more than 10% of the stone will have a diameter of less than six (6) inches. The thickness of the rip-rap liner will be no less than twelve (12) inches.

CLASS 2 RIP-RAP

No more than 10% of the stone will have a diameter greater than sixteen (16) inches; no more than 50% of the stone will have a diameter less than twelve (12) inches; and no more than 10% of the stone will have a diameter of less than six (6) inches. The thickness of the rip-rap liner will be no less than sixteen (16) inches.

CLASS 3 RIP-RAP

No more than 10% of the stone will have a diameter greater than twenty two (22) inches; no more than 50% of the stone will have a diameter less than sixteen (16) inches; and no more than 10% of the stone will have a diameter of less than eight (8) inches. The thickness of the rip-rap liner will be no less than twenty two (22) inches.

CLASS 4 RIP-RAP

No more than 10% of the stone will have a diameter greater than twenty seven (27) inches; no more than 50% of the stone will have a diameter less than twenty two (22) inches; and no more than 10% of the stone will have a diameter of less than ten (10) inches. The thickness of the rip-rap liner will be no less than twenty seven (27) inches.

CLASS 5 RIP-RAP

No more than 10% of the stone will have a diameter greater than thirty four (34) inches; no more than 50% of the stone will have a diameter less than twenty seven (27) inches; and no more than 10% of the stone will have a diameter of less than sixteen (16) inches. The thickness of the rip-rap liner will be no less than thirty four (34) inches.

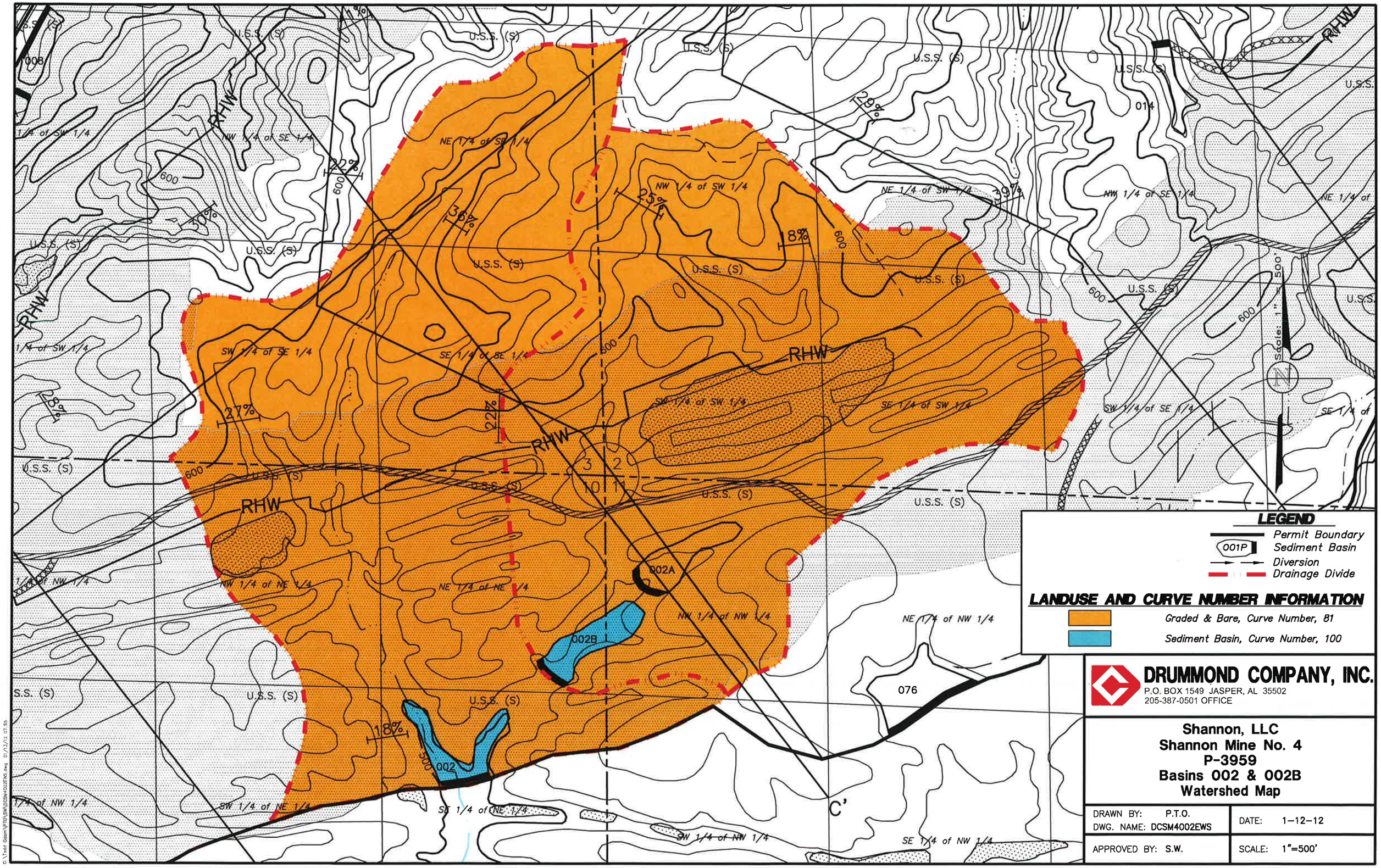
LEGEND
Permit Boundary
001P Sediment Basin
Diversion
Drainage Divide
LANDUSE AND CURVE NUMBER INFORMATION
Graded & Bare, Curve Number, 81
Sediment Basin, Curve Number, 100
DRUMMOND COMPANY, INC.
P.O. BOX 1549 JASPER, AL 35502
205-387-0501 OFFICE
Shannon, LLC
Shannon Mine No. 4
P-3959
Basins 002 & 002B
Watershed Map
DRAWN BY: P.T.O.
DWG. NAME: DCSM4002EWS
DATE: 1-12-12
APPROVED BY: S.W.
SCALE: 1"=500'
Scale: 1" = 500'
RHW
002A
002B
002
076
C'
NE 1/4 of SW 1/4
NW 1/4 of SW 1/4
SW 1/4 of SW 1/4
SE 1/4 of SW 1/4
SW 1/4 of SE 1/4
SE 1/4 of SE 1/4
NW 1/4 of SE 1/4
NW 1/4 of NE 1/4
NE 1/4 of NE 1/4
NW 1/4 of NW 1/4
NE 1/4 of NW 1/4
SW 1/4 of NE 1/4
SE 1/4 of NE 1/4
SW 1/4 of NW 1/4
SE 1/4 of NW 1/4
U.S.S. (S)
22%
30%
36%
25%
18%
29%
39%
27%
28%
18%
600
500

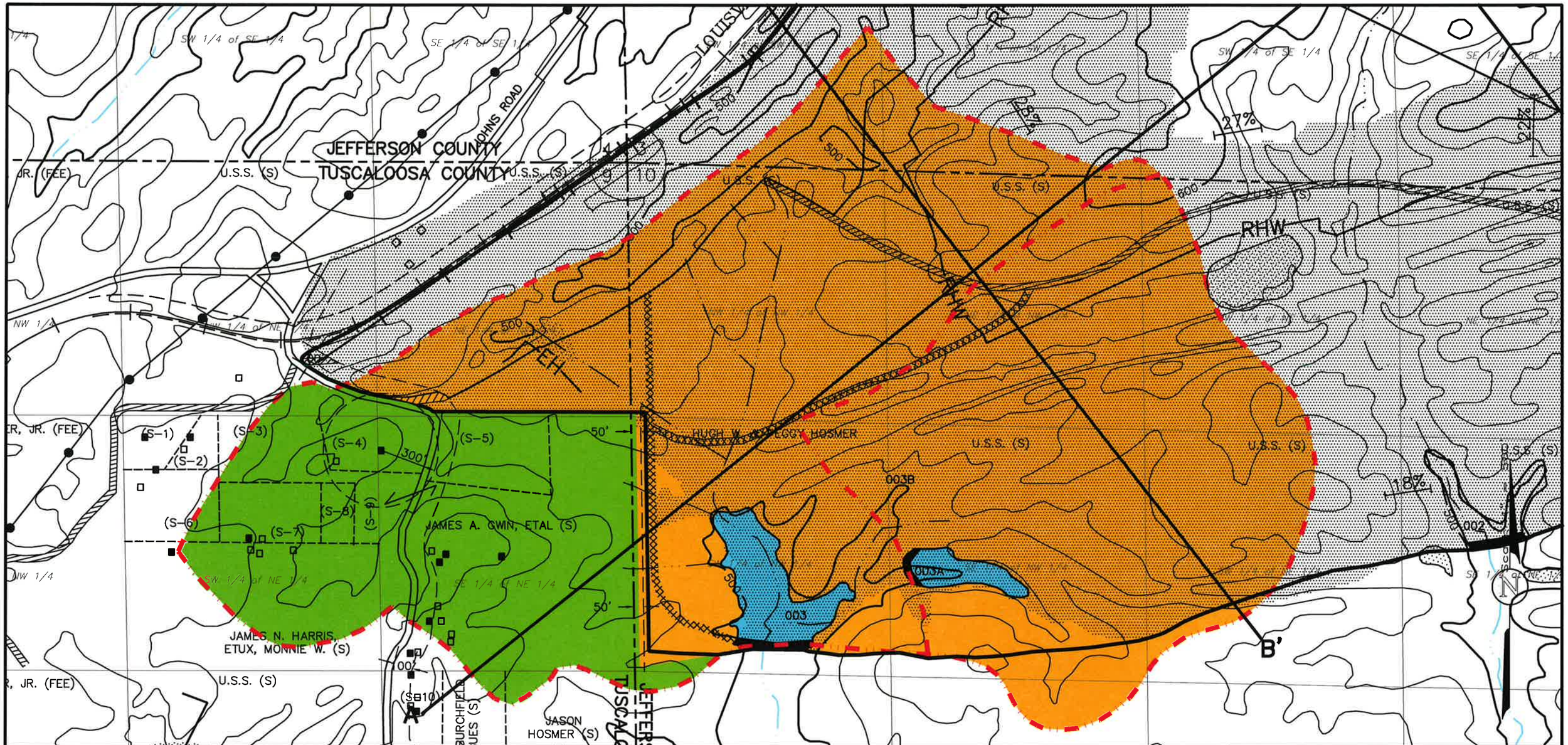

LEGEND

- Permit Boundary/Increment Boundary
- Drainage Divide
- Diversion Ditch/Berm

LANDUSE & CURVE NUMBER INFORMATION

- Unmanaged Timberland, Curve Number 70
- Sediment Basin, Curve Number 100
- Graded & Bare, Curve Number 81

DRUMMOND COMPANY, INC.
P.O. BOX 1549 JASPER, AL 35502

Shannon, LLC
Shannon Mine No. 4/P-3959
Basin 003 & 003A Re-Evaluation
Watershed Map

DRAWN BY: P.T.O. DWG. NAME: DCSM4003&003AWS	DATE: 1-18-12
APPROVED BY: S.W.	SCALE: 1"=500'

G:\Todd Odom\PTO\SW\DCSM4003&003AWS.dwg 02/14/12 08:45

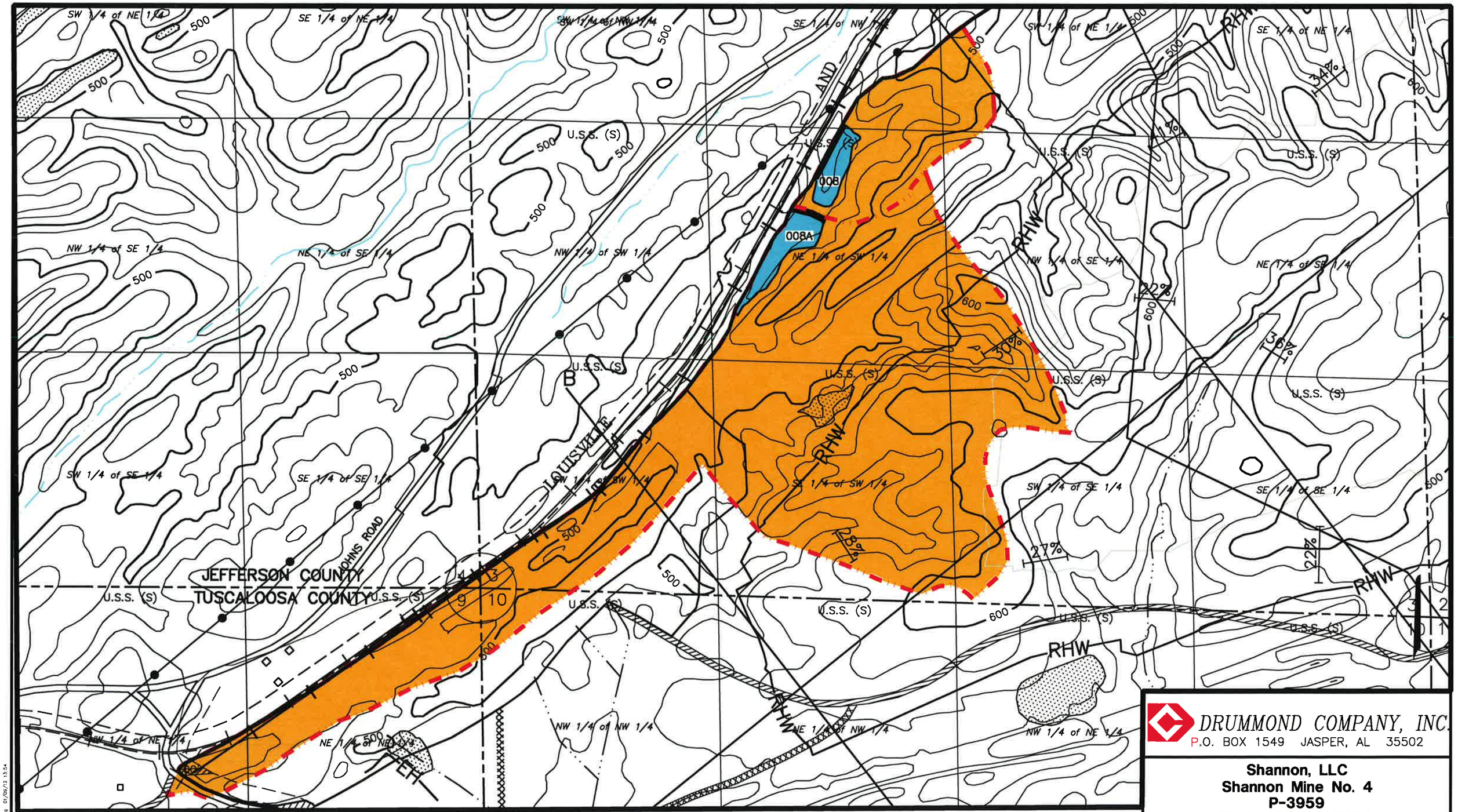

LEGEND

- Permit Boundary/Increment Boundary
- Diversion/ Berm
- Drainage Divide

LANDUSE AND CURVE NUMBER INFORMATION

- Graded & Bare, Curve Number, 81
- Sediment Basin, Curve Number, 100

DRUMMOND COMPANY, INC.
P.O. BOX 1549 JASPER, AL 35502

Shannon, LLC
Shannon Mine No. 4
P-3959
Basins 008 & 008A
Watershed Map

DRAWN BY: P.T.O. DWG. NAME: DCSM4008WS	DATE: 1-9-12
APPROVED BY: S.W.	SCALE: 1"=500'

G:\Todd Odom\PTO\SW\DCSM4008WS.dwg 01/09/12 13:54

LEGEND

- Permit Boundary
- 001P Sediment Basin
- Diversion
- Drainage Divide

LANDUSE AND CURVE NUMBER INFORMATION

- Graded & Bare, Curve Number, 81
- Sediment Basin, Curve Number, 100

DRUMMOND COMPANY, INC.
P.O. BOX 1549 JASPER, AL 35502

Shannon, LLC
Shannon Mine No. 4
P-3959
Basin 009
Watershed Map

DRAWN BY: P.T.O. DWG. NAME: DCSM4009WS	DATE: 1-4-12
APPROVED BY: S.W.	SCALE: 1"=500'

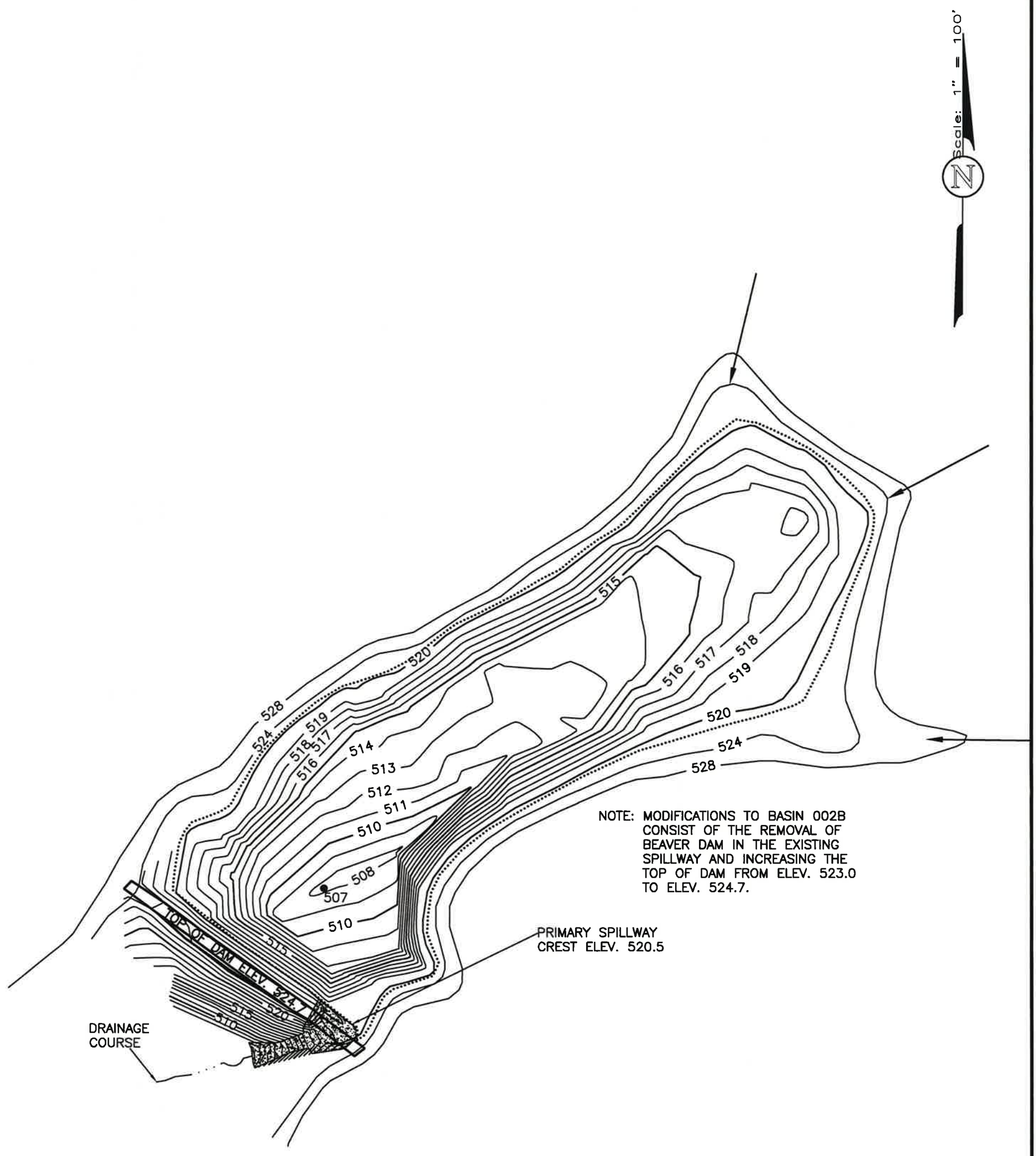

LEGEND

—508— EXISTING CONTOURS

– –508– – FINISHED CONTOURS

····· NORMAL POOL ELEV. 521.0

——► MAJOR INFLOW

DRUMMOND COMPANY, INC.
P.O. BOX 1549 JASPER, AL 35502
205-387-0501 OFFICE

Shannon, LLC
Shannon Mine No. 4
P-3959
Basin 002B Re-Evaluation
Planview

DRAWN BY: P.T.O. DWG. NAME: DCSM4002BPV	DATE: 1–11–12
APPROVED BY: S.W.	SCALE: 1"=100'

G:\Todd Odom\PTO\SW\DCSM4002BPV.dwg 02/14/12 12:31

Spillway Gradient shall be Approximately 40%
Crest of Spillway Elevation 521.7
Q out 295.5 C.F.S.

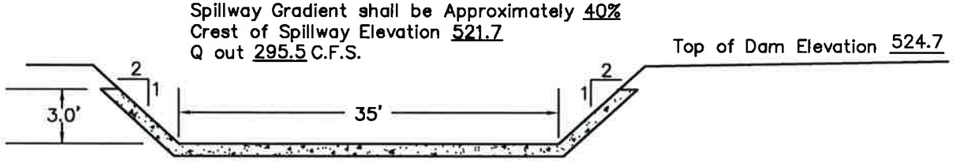

Channel Lining to Consist of 4" Reinforced Concrete

Spillway

Notes:

1. The sediment shall be removed from the basin when the accumulated sediment reaches the sediment storage volume.
2. Outer slopes of embankment shall be grassed.
3. Fill material shall be placed in 12" lifts and compacted to 95% of standard proctor.
4. The surface beneath the embankment shall be stripped of undesirable material.
5. Upon completion of mining, reclamation and maintenance of water quality standards the pond will be de-watered and reclaimed.
6. See the attached pond construction criteria.
7. See the attached drawings and specifications for diversions.
8. Elevations are based on assumed datum.
9. Channel lining within the control section of the spillway channel will extend to the maximum water elevation.

Storage Computation

Elevation (feet)	Area (acres)	Avg. Area (acres)	Interval (feet)	Storage (ac.-ft.)	Acc. Storage (ac.-ft.)
507	.000				.000
		.010	1	.010	
508	.020				.010
		.265	4	1.06	
512	.510				1.07
		1.07	4	4.28	
516	1.63				5.35
		2.265	4	9.06	
520	2.90				14.41
		3.50	4	14.00	
524	4.10				28.41
		4.70	4	18.80	
528	5.30				47.21

Key Basin Parameters

Drainage Area 166 Acres
Disturbed Area 163 Acres
Sediment Storage 15.3 Ac. Ft.
Detention Storage 3.9 Ac. Ft.
Permanent Pool Capacity 19.2 Ac. Ft.
Total Basin Capacity 19.2 Ac. Ft.
Peak Inflow 378.4 C.F.S.
Peak Outflow 295.5 C.F.S.

Stage vs. Storage Curve

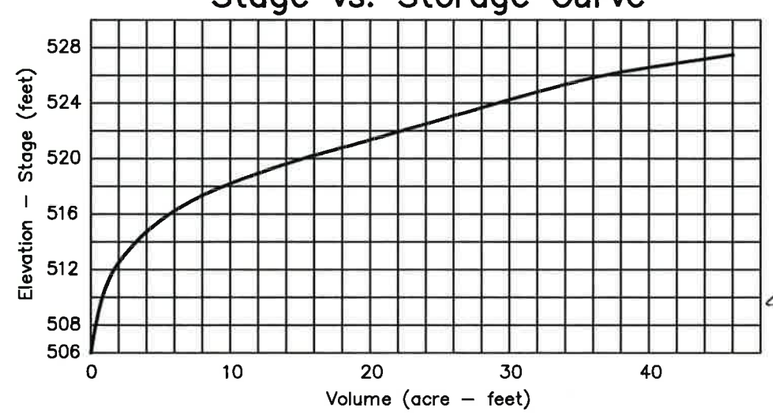

Steven R. Ingle, P.E.
AL Registration #18213

ALABAMA REGISTERED No. 18213 PROFESSIONAL ENGINEER STEVEN R. INGLE

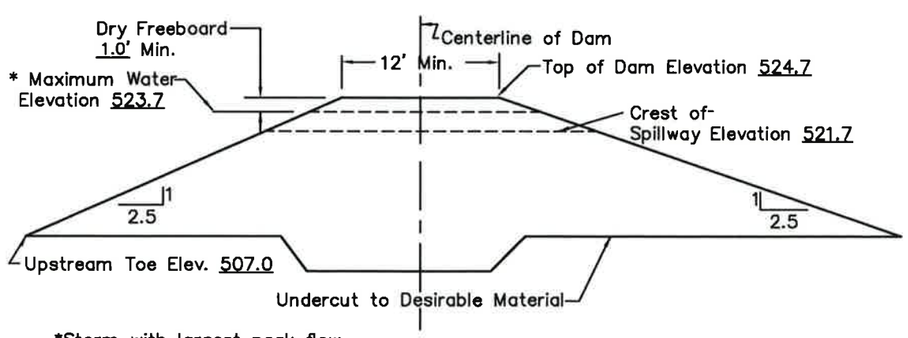

*Storm with largest peak flow
Either 10 year - 24 hour event
or 25 year - 6 hour event.

Typical Cross Section Along Spillway

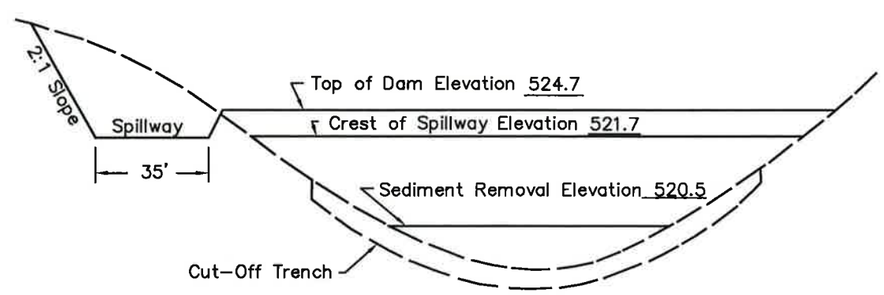

Typical Profile Looking Downstream

DRUMMOND COMPANY, INC.
P.O. BOX 1549 JASPER, AL 35502
205-387-0501 OFFICE

Shannon, LLC
Shannon Mine No. 4
P-3959
Basin 002B Re-Evaluation

DRAWN BY: P.T.O. DWG. NAME: DCSM4002BTY	DATE: 1-11-12
APPROVED BY: S.W.	SCALE: NONE

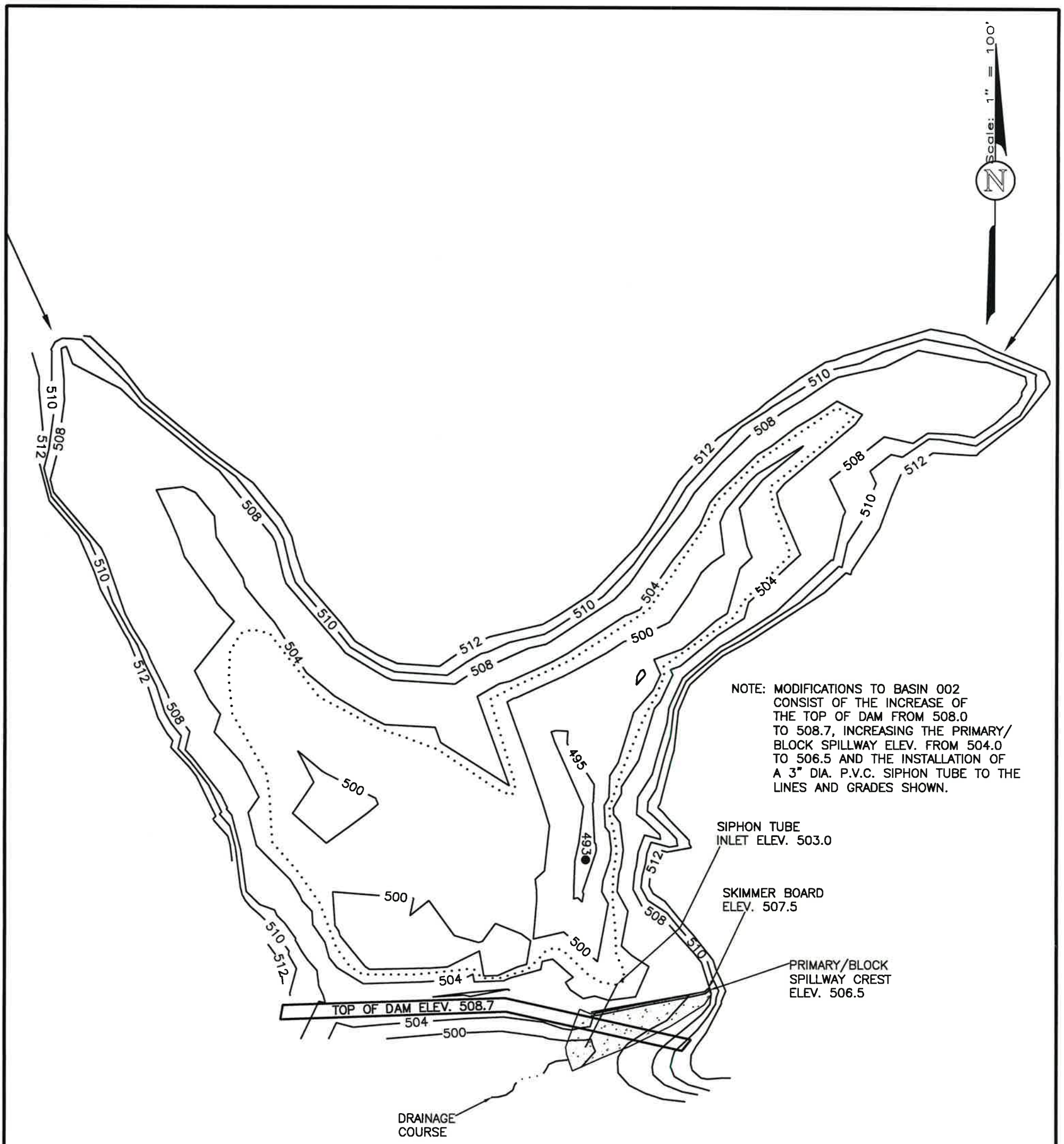

LEGEND

—508— EXISTING CONTOURS
· · · · · · · · · · NORMAL POOL ELEV. 503.0
——► MAJOR INFLOW

DRUMMOND COMPANY, INC.
P.O. BOX 1549 JASPER, AL 35502
205-387-0501 OFFICE

Shannon, LLC
Shannon Mine No. 4
P-3959
Basin 002 Re-Evaluation
Planview

DRAWN BY: P.T.O. DWG. NAME: DCSM4002EPV	DATE: 1-12-12
APPROVED BY: S.W.	SCALE: 1"=100'

G:\Todd Odom\PTO\SW\DCSM4002EPV.dwg 02/15/12 08:50

SKIMMERBOARD DETAILED DESIGN

Skimmer Board Elev. 507.5
8" Block Elev. 506.5
Q Out 516.6 C.F.S.
V Out 3.5 F.S

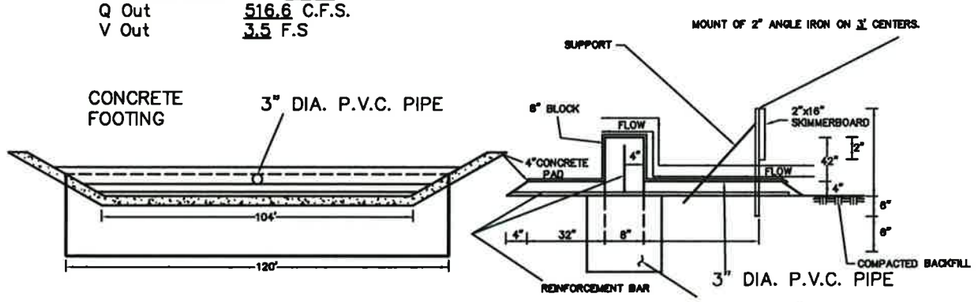

FOOTING TO BE CENTERED BENEATH 8" BLOCKS
MINIMUM WIDTH : 2.0 FEET
MINIMUM DERTH: FEET (UNLESS SOLID ROCK ENCOUNTERED)

NOTE: THE SIPHON TUBE WILL BE RESTRAINED WITH STRAPS WHERE NECESSARY.

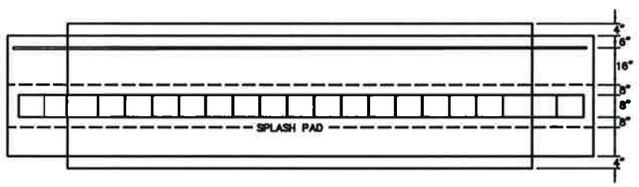

PLAN VIEW

SPILLWAY GRADIANT SHALL BE APPROXIMATELY 3%.

Notes:

1. The sediment shall be removed from the basin when the accumulated sediment reaches the sediment storage volume.
2. Outer slopes of embankment shall be grassed.
3. Fill material shall be placed in 12" lifts and compacted to 95% of standard proctor.
4. The surface beneath the embankment shall be stripped of undesirable material.
5. Upon completion of mining, reclamation and maintenance of water quality standards the pond will be de-watered and reclaimed.
6. See the attached pond construction criteria.
7. See the attached drawings and specifications for diversions.
8. Elevations are based on assumed datum.
9. Channel lining within the control section of the spillway channel will extend to the maximum water elevation.

Storage Computation

Elevation (feet)	Area (acres)	Avg. Area (acres)	Interval (feet)	Storage (ac.-ft.)	Acc. Storage (ac.-ft.)
493	.000				.000
		.025	2	.050	
495	.050				.050
		.495	5	2.475	
500	.940				2.525
		1.985	4	7.940	
504	3.030				10.465
		4.245	4	16.980	
508	5.460				27.445
		5.630	2	11.260	
510	5.80				38.705

Key Basin Parameters

Drainage Area_____ 335 Acres
Disturbed Area_____ 165 Acres
Sediment Storage_____ 4.8 Ac. Ft.
Detention Storage_____ 2.1 Ac. Ft.
Full Pool Capacity_____ 18.9 Ac. Ft.
Normal Pool Capacity_____ 6.9 Ac. Ft.
Total Basin Capacity_____ 18.9 Ac. Ft.
Peak Inflow_____ 633.1 C.F.S.
Peak Outflow_____ 516.6 C.F.S.

Stage vs. Storage Curve

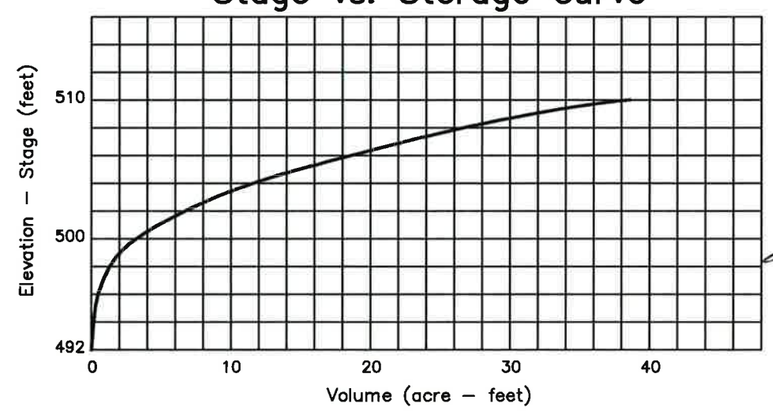

Steven R. Ingle, P.E.
AL Registration #18213

ALABAMA REGISTERED No. 18213 PROFESSIONAL ENGINEER STEVEN R. INGLE

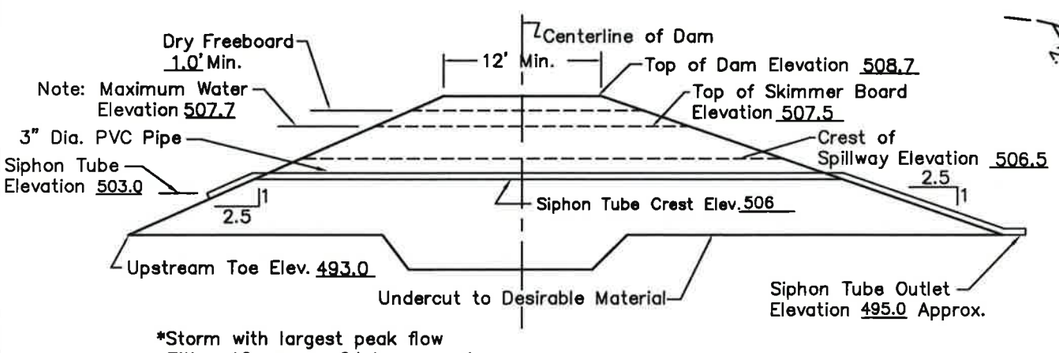

*Storm with largest peak flow
Either 10 year – 24 hour event
or 25 year – 6 hour event.

Typical Cross Section Along Primary Spillway

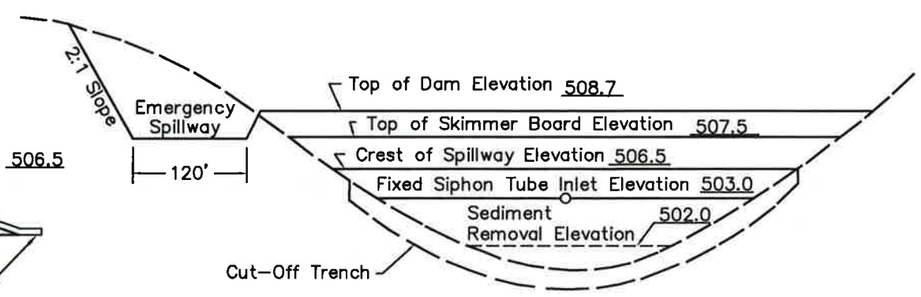

Typical Profile Looking Downstream

DRUMMOND COMPANY, INC.
P.O. BOX 1549 JASPER, AL 35502
205-387-0501 OFFICE

Shannon, LLC
Shannon Mine No. 4
P-3959
Basin 002 Re-Evaluation

DRAWN BY: P.T.O. DWG. NAME: DCSM4002ETY	DATE: 1-12-12
APPROVED BY: S.W.	SCALE: 1"=100'

B:\Todd Storm\PTO\SW\DCSM4002ETY.dwg 02/15/12 08:10

SKIMMERBOARD DETAILED DESIGN

SKIMMER BOARD ELEV. 507.5
8" BLOCK ELEV. 506.5
Q OUT 516.6 C.F.S.
V OUT 3.5 F.S

MOUNT OF 2" ANGLE IRON ON 3' CENTERS.

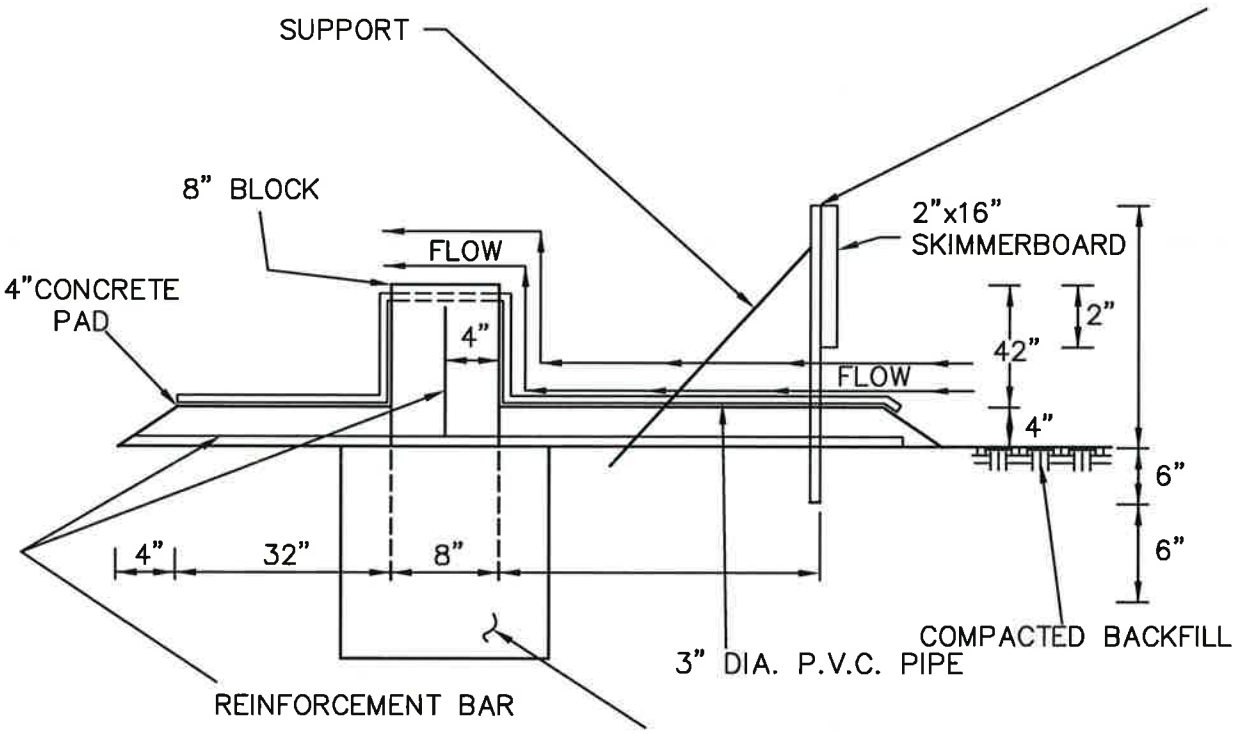

FOOTING TO BE CENTERED BENEATH 8" BLOCKS
MINIMUM WIDTH : 2.0 FEET
MINIMUM DERTH: FEET (UNLESS SOLID ROCK ENCOUNTERED)

NOTE: THE SIPHON TUBE WILL BE RESTRAINED WITH STRAPS WHERE NECESSARY.

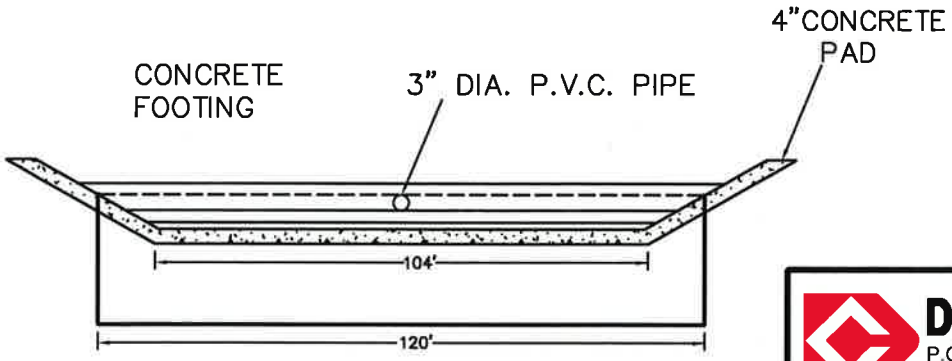

DRUMMOND COMPANY, INC.
P.O. BOX 1549 JASPER, AL 35502
205-387-0501 OFFICE

Shannon, LLC
Shannon Mine No. 4
P-3959
Basin 002 Re-Evaluation

DRAWN BY: P.T.O. DWG. NAME: DCSM4002ETY	DATE: 1-12-12
APPROVED BY: S.W.	SCALE: NONE

G:\Todd Odom\PTO\SWA\DCSM4002ETY.dwg 02/15/12 08:10

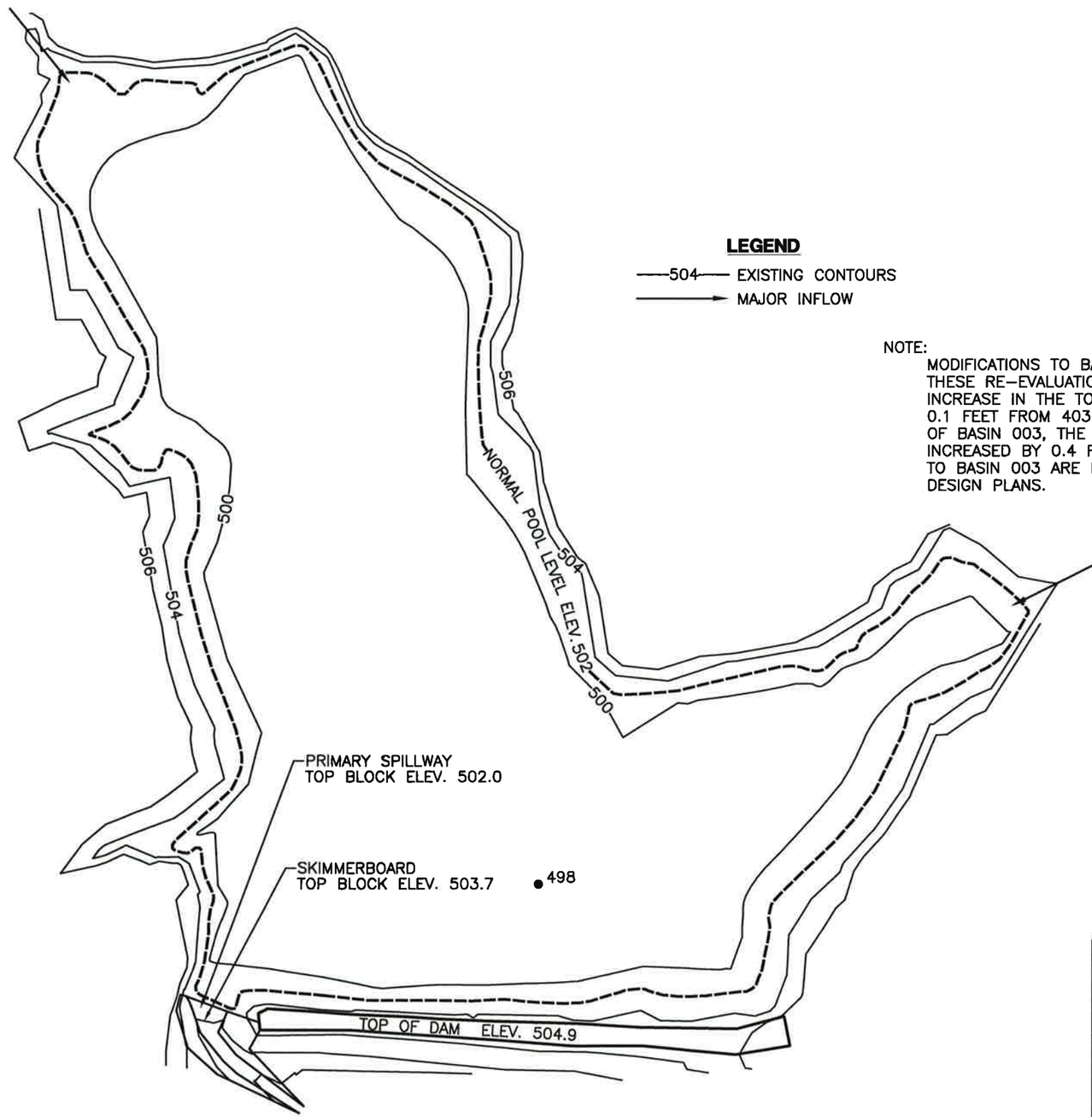

LEGEND

—504— EXISTING CONTOURS

→ MAJOR INFLOW

NOTE:

MODIFICATIONS TO BASIN 003 REQUIRED AS A RESULT OF THESE RE-EVALUATION DESIGN PLANS CONSIST OF THE INCREASE IN THE TOP OF SKIMMERBOARD ELEVATION BY 0.1 FEET FROM 403.6 TO 403.7. DURING THE CONSTRUCTION OF BASIN 003, THE TOP OF SKIMMERBOARD ELEVATION WAS INCREASED BY 0.4 FEET. WITH THIS IN MIND, NO FIELD MODIFICATIONS TO BASIN 003 ARE REQUIRED AS A RESULT OF THESE RE-EVALUATION DESIGN PLANS.

Scale: 1" = 100'

N

DRUMMOND COMPANY, INC.
P.O. BOX 1549 JASPER, AL 35502

Shannon, LLC
Shannon Mine No. 4
P-3959
Basin 003 Re-Evaluation Planview

DRAWN BY: P.T.O. DWG. NAME: DCSM4003PV	DATE: 1-18-12
APPROVED BY: S.W.	SCALE: 1"=100'

G:\Todd Odom\PTO\SW\DCSM4003PV.dwg 02/14/12 10:11

SKIMMERBOARD DETAILED DESIGN

Skimmer Board Elev. 503.7
8" Block Elev. 502.0
Q Out 300.7 C.F.S.
V Out 4.3 F.S

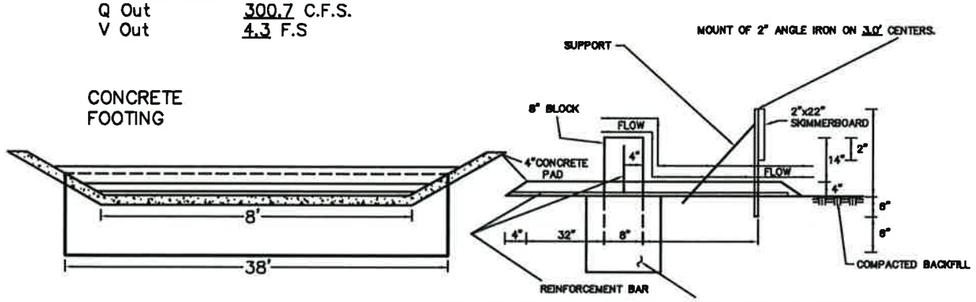

FOOTING TO BE CENTERED BENEATH 8" BLOCKS
MINIMUM WIDTH : 2.0 FEET
MINIMUM DEPTH: FEET (UNLESS SOLID ROCK ENCOUNTERED)

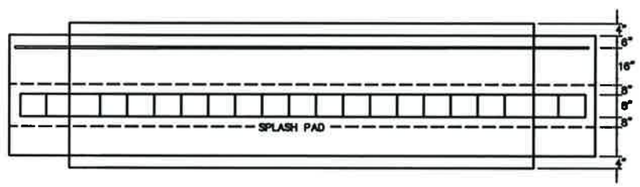

PLAN VIEW

SPILLWAY GRADIANT SHALL BE APPROXIMATELY 3%.

Notes:

1. The sediment shall be removed from the basin when the accumulated sediment reaches the sediment storage volume.
2. Sediment control structures are required on pond inlets.
3. Outer slopes of embankment shall be grassed.
4. Fill material shall be placed in 12" lifts and compacted to 95% of standard proctor.
5. The surface beneath the embankment shall be stripped of undesirable material.
6. Upon completion of mining, reclamationn and maintenance of water quality standards the pond will be de-watered and reclaimed.
7. See the attached pond construction criteria.
8. See the attached drawings and specifications for diversions.
9. Elevations are based on assumed datum.

Storage Computation

Elevation (feet)	Area (acres)	Avg. Area (acres)	Interval (feet)	Storage (ac.-ft.)	Acc. Storage (ac.-ft.)
498	.000				.000
		2.353	2	4.706	
500	4.706				4.706
		5.751	4	23.002	
504	6.795				27.708
		7.877	2	15.754	
506	8.959				43.462

Stage vs. Storage Curve

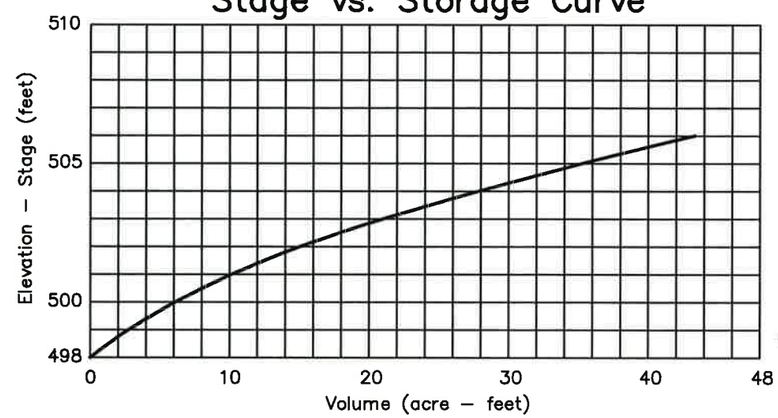

Key Basin Parameters

Drainage Area 293.0 Acres
Disturbed Area 182.0 Acres
Sediment Storage 6.8 Ac. Ft.
Detention Storage 6.8 Ac. Ft.
Permanent Pool Capacity 13.6 Ac. Ft.
Total Basin Capacity 13.6 Ac. Ft.
Peak Inflow 444.0 C.F.S.
Peak Outflow 300.7 C.F.S.

Steven R. Ingle, P.E.
AL Registration #18213

ALABAMA REGISTERED No. 18213 PROFESSIONAL ENGINEER STEVEN R. INGLE
2-20-12

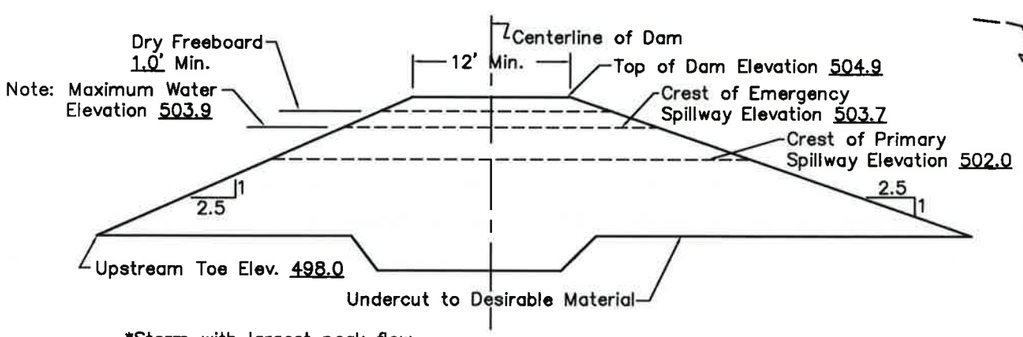

*Storm with largest peak flow
Either 10 year - 24 hour event
or 50 year - 6 hour event.

Typical Cross Section
Along Primary Spillway

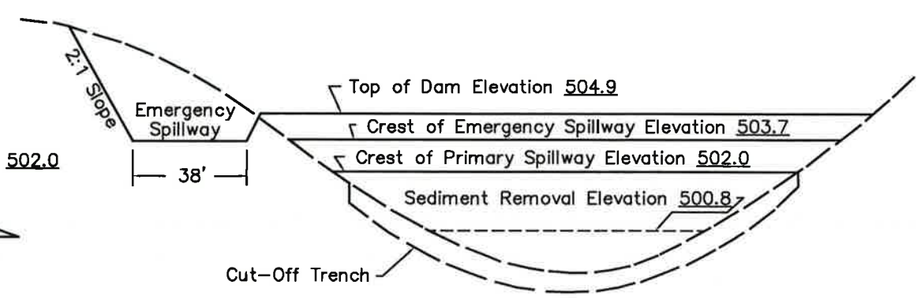

Typical Profile Looking Downstream

DRUMMOND COMPANY, INC.
P.O. BOX 1549 JASPER, AL 35502

Shannon, LLC
Shannon Mine No. 4
P-3959
Basins 003 Re-Evaluation

DRAWN BY: P.T.O. DWG. NAME: DCSM4003RETY	DATE: 1-17-12
APPROVED BY: S.W.	SCALE: NONE

G:\Todd Edgom\PTO\SWA\DCSM4003RETY.dwg 02/14/12 09:58

G:\Todd Odom\PTO\SW\DCSM4003APV.dwg 02/14/12 10:19

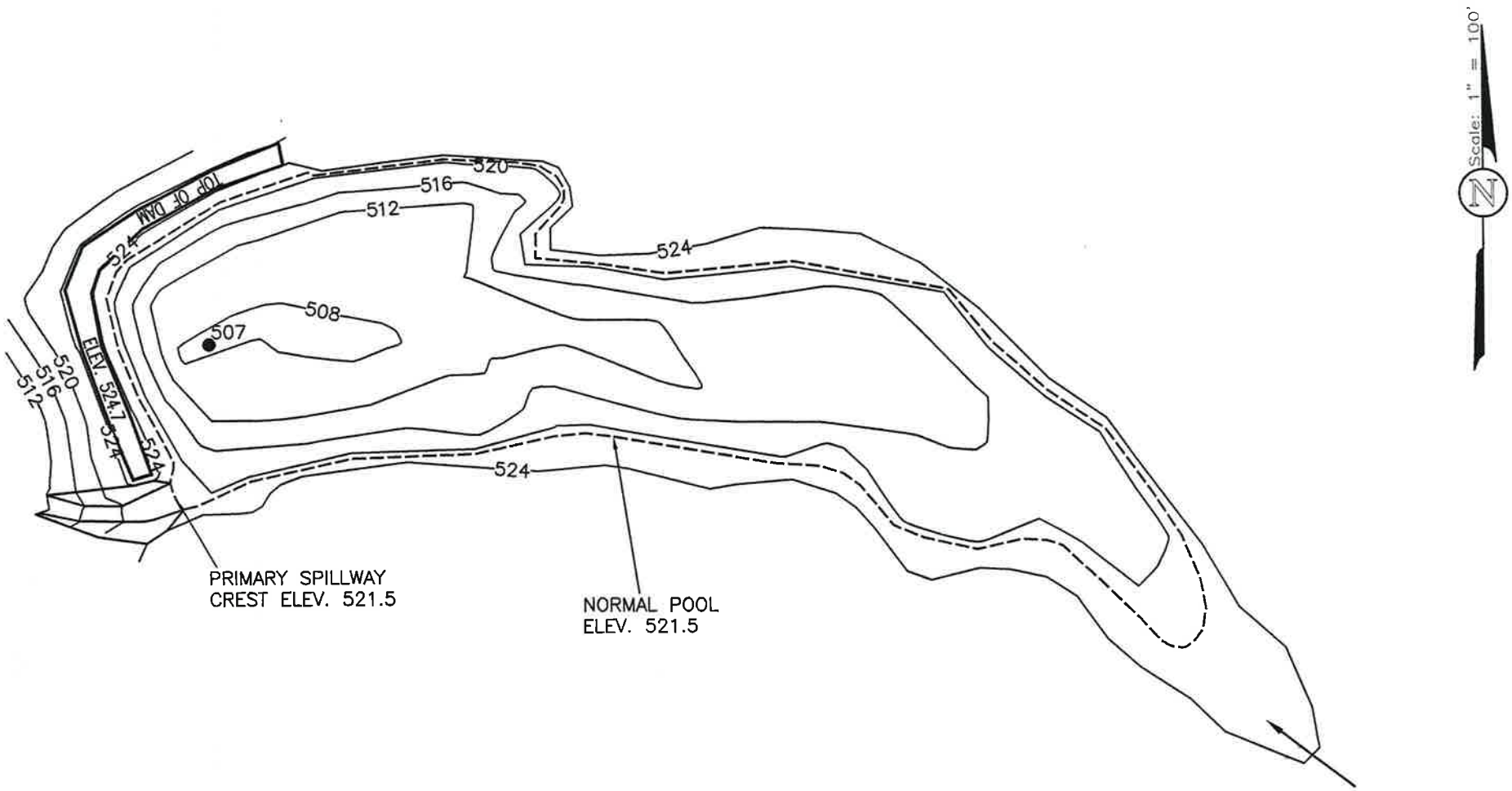

LEGEND

—524— EXISTING CONTOURS

→ MAJOR INFLOW

NOTE:
MODIFICATIONS TO BASIN 003A REQUIRED AS A RESULT OF THESE RE-EVALUATION DESIGN PLANS CONSIST OF THE INCREASE IN THE TOP OF DAM ELEVATION BY 0.8 FEET FROM 523.9 TO 524.7 AND THE REMOVAL OF THE EXISTING BEAVER DAM FROM THE SPILLWAY SYSTEM.

DRUMMOND COMPANY, INC.
P.O. BOX 1549 JASPER, AL 35502

Shannon, LLC
Shannon Mine No. 4
P-3959
Basin 003A Re-Evaluation Planview

DRAWN BY:	P.T.O.	DATE:	1-18-12
DWG. NAME:	DCSM4003APV		
APPROVED BY:	S.W.	SCALE:	1"=100'

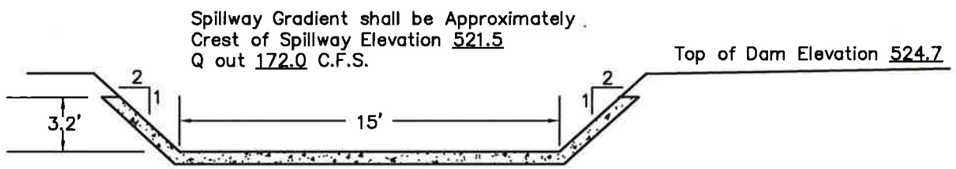

Channel Lining to Consist of 4" Reinforced Concrete

Spillway

Notes:

1. The sediment shall be removed from the basin when the accumulated sediment reaches the sediment storage volume.
2. Outer slopes of embankment shall be grassed.
3. Fill material shall be placed in 12" lifts and compacted to 95% of standard proctor.
4. The surface beneath the embankment shall be stripped of undesirable material.
5. Upon completion of mining, reclamation and maintenance of water quality standards the pond will be de-watered and reclaimed.
6. See the attached pond construction criteria.
7. See the attached drawings and specifications for diversions.
8. Elevations are based on assumed datum.
9. Channel lining within the control section of the spillway channel will extend to the maximum water elevation.

Storage Computation

Elevation (feet)	Area (acres)	Avg. Area (acres)	Interval (feet)	Storage (ac.-ft.)	Acc. Storage (ac.-ft.)
507	.000				.000
		.035	1	.035	
508	.070				.035
		.335	4	1.341	
512	.600				1.375
		.935	4	3.740	
516	1.270				5.115
		1.620	4	6.480	
520	1.970				11.595
		2.375	4	9.500	
524	2.780				21.095

Key Basin Parameters

Drainage Area _____ 105.0 Acres
Disturbed Area _____ 103.0 Acres
Sediment Storage _____ 10.3 Ac. Ft.
Detention Storage _____ 3.5 Ac. Ft.
Permanent Pool Capacity ___ 13.8 Ac. Ft.
Total Basin Capacity _____ 13.8 Ac. Ft.
Peak Inflow _____ 239.7 C.F.S.
Peak Outflow _____ 172.0 C.F.S.

Stage vs. Storage Curve

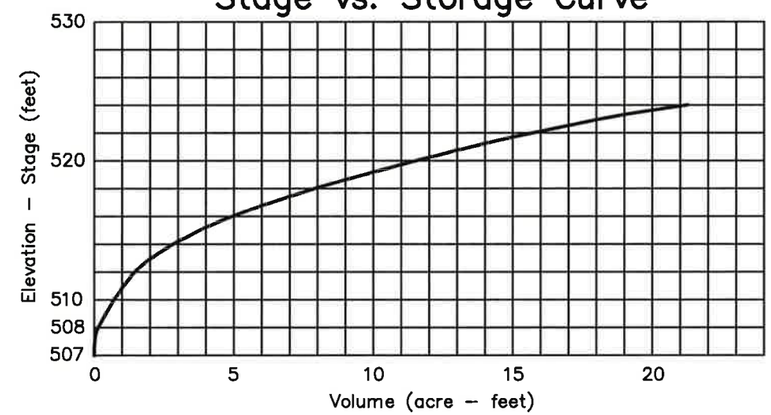

Steven R. Ingle, P.E.
AL Registration #18213

ALABAMA REGISTERED No. 18213 PROFESSIONAL ENGINEER STEVEN R. INGLE

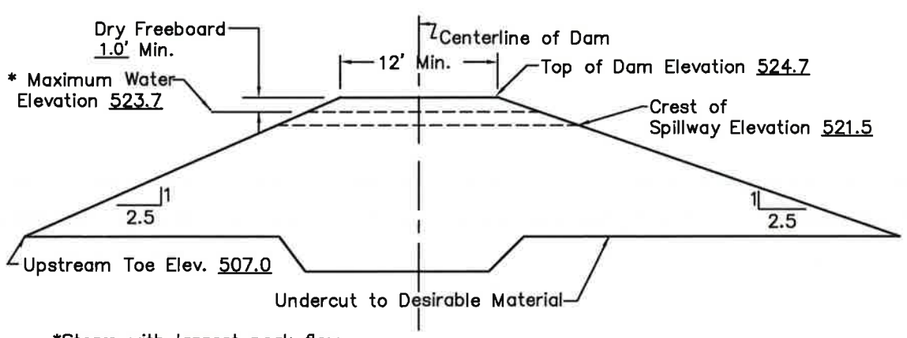

*Storm with largest peak flow
Either 10 year – 24 hour event
or 25 year – 6 hour event.

Typical Cross Section Along Spillway

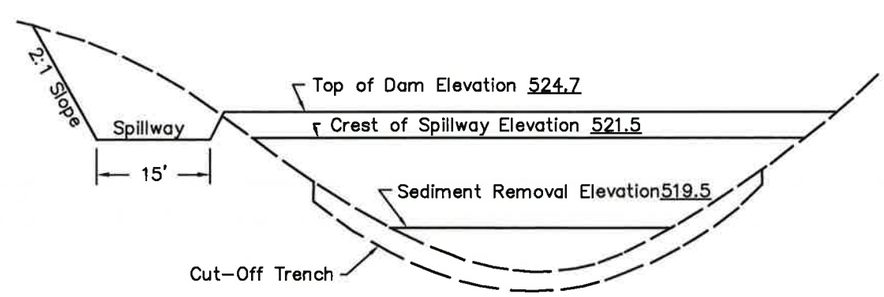

Typical Profile Looking Downstream

DRUMMOND COMPANY, INC.
P.O. BOX 1549 JASPER, AL 35502

Shannon, LLC
Shannon Mine No. 4
P-3959
Basins 003A Re-Evaluation

DRAWN BY: P.T.O. DWG. NAME: DCSM4003ARETY	DATE: 1-18-12
APPROVED BY: S.W.	SCALE: NONE

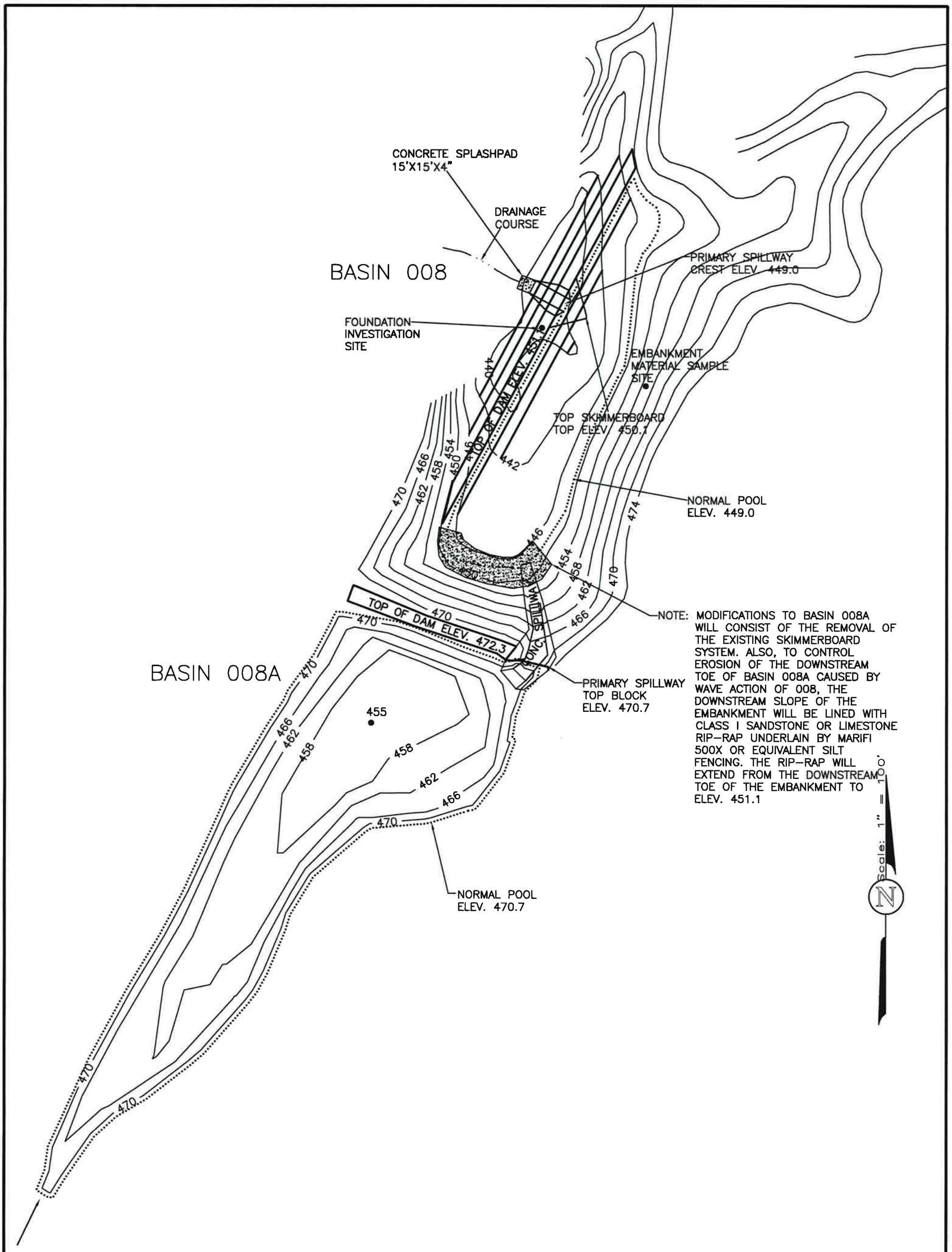

NOTE: MODIFICATIONS TO BASIN 008A WILL CONSIST OF THE REMOVAL OF THE EXISTING SKIMMERBOARD SYSTEM. ALSO, TO CONTROL EROSION OF THE DOWNSTREAM TOE OF BASIN 008A CAUSED BY WAVE ACTION OF 008, THE DOWNSTREAM SLOPE OF THE EMBANKMENT WILL BE LINED WITH CLASS I SANDSTONE OR LIMESTONE RIP-RAP UNDERLAIN BY MARIFI 500X OR EQUIVALENT SILT FENCING. THE RIP-RAP WILL EXTEND FROM THE DOWNSTREAM TOE OF THE EMBANKMENT TO ELEV. 451.1

LEGEND

—458— EXISTING CONTOURS

→ MAJOR INFLOW

DRUMMOND COMPANY, INC.
P.O. BOX 1549 JASPER, AL 35502

Shannon, LLC
Shannon Mine No. 4
P-3959
Basin 008A & 008
Planview

DRAWN BY: P.T.O. DWG. NAME: DCSM4008PV	DATE: 1-9-12
APPROVED BY: S.W.	SCALE: 1"=100'

G:\Todd Odom\PTO\SW\DCSM4008PV.dwg 01/13/12 09:59

SKIMMERBOARD DETAILED DESIGN

8" Block Elev. 470.7
Q Out 45.1 C.F.S.
V Out 2.0 F.S

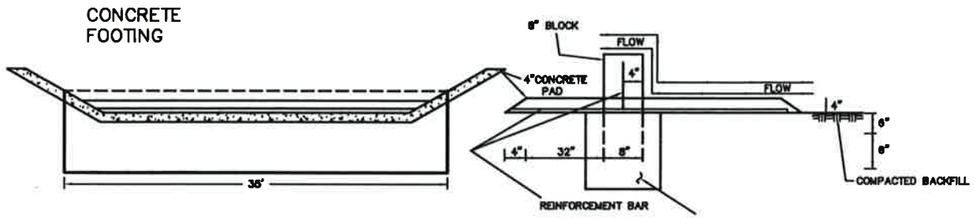

FOOTING TO BE CENTERED BENEATH 8" BLOCKS
MINIMUM WIDTH : 2.0 FEET
MINIMUM DERTH: FEET (UNLESS SOLID ROCK ENCOUNTERED)

SPILLWAY GRADIANT SHALL BE APPROXIMATELY 40%

Notes:

1. The sediment shall be removed from the basin when the accumulated sediment reaches the sediment storage volume.
2. Sediment control structures are required on pond inlets.
3. Outer slopes of embankment shall be grassed.
4. Fill material shall be placed in 12" lifts and compacted to 95% of standard proctor.
5. The surface beneath the embankment shall be stripped of undesirable material.
6. Upon completion of mining, reclamationn and maintenance of water quality standards the pond will be de-watered and reclaimed.
7. See the attached pond construction criteria.
8. See the attached drawings and specifications for diversions.
9. Elevations are based on assumed datum.

Storage Computation

Elevation (feet)	Area (acres)	Avg. Area (acres)	Interval (feet)	Storage (ac.-ft.)	Acc. Storage (ac.-ft.)
455	.000				.000
		0.20	3	0.60	
458	0.40				0.60
		0.75	4	3.00	
462	1.10				3.60
		1.40	4	5.60	
466	1.70				9.20
		1.90	4	7.60	
470	2.10				16.80
		2.20	2	4.40	
472	2.30				21.20

Stage vs. Storage Curve

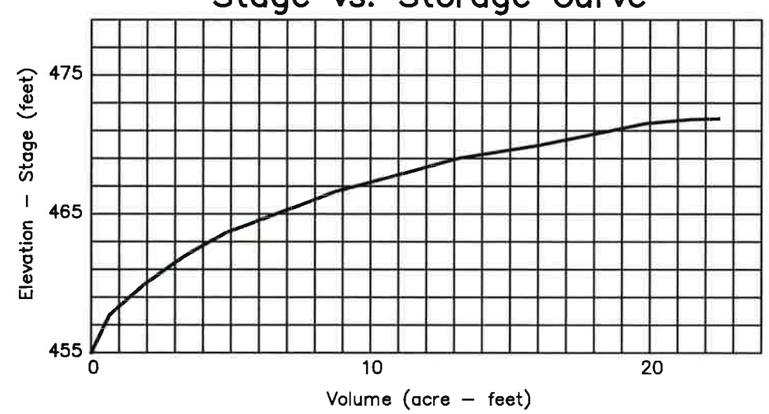

Key Basin Parameters

Drainage Area 100.0 Acres
Disturbed Area 100.0 Acres
Sediment Storage 13.5 Ac. Ft.
Detention Storage 4.5 Ac. Ft.
Permanent Pool Capacity 18.0 Ac. Ft.
Total Basin Capacity 18.0 Ac. Ft.
Peak Inflow 68.1 C.F.S.
Peak Outflow 45.1 C.F.S.

Steven R. Ingle, P.E.
AL Registration #18213

ALABAMA REGISTERED No. 18213 PROFESSIONAL ENGINEER STEVEN R. INGLE

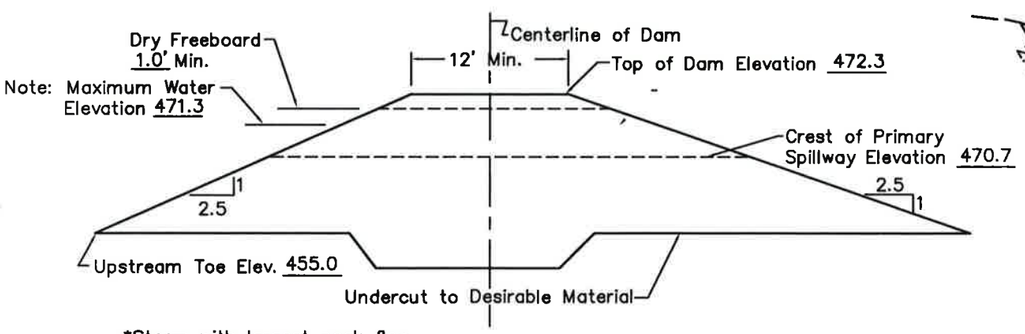

*Storm with largest peak flow
Either 10 year - 24 hour event
or 25 year - 6 hour event.

Typical Cross Section
Along Primary Spillway

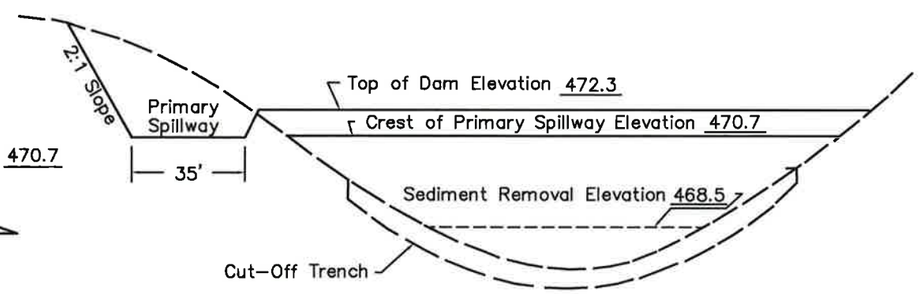

Typical Profile Looking Downstream

DRUMMOND COMPANY, INC.
P.O. BOX 1549 JASPER, AL 35502

Shannon, LLC
Shannon Mine No. 4
P-3959
Basin 008A

DRAWN BY: P.T.O. DWG. NAME: DCSM4008ATY	DATE: 1-9-11
APPROVED BY: S.W.	SCALE: 1"=100'

Skimmer Board Elev. 450.1
Spillway Elev. 449.0
Q Out 54.4 C.F.S.
V Out 1.1 F.P.S.

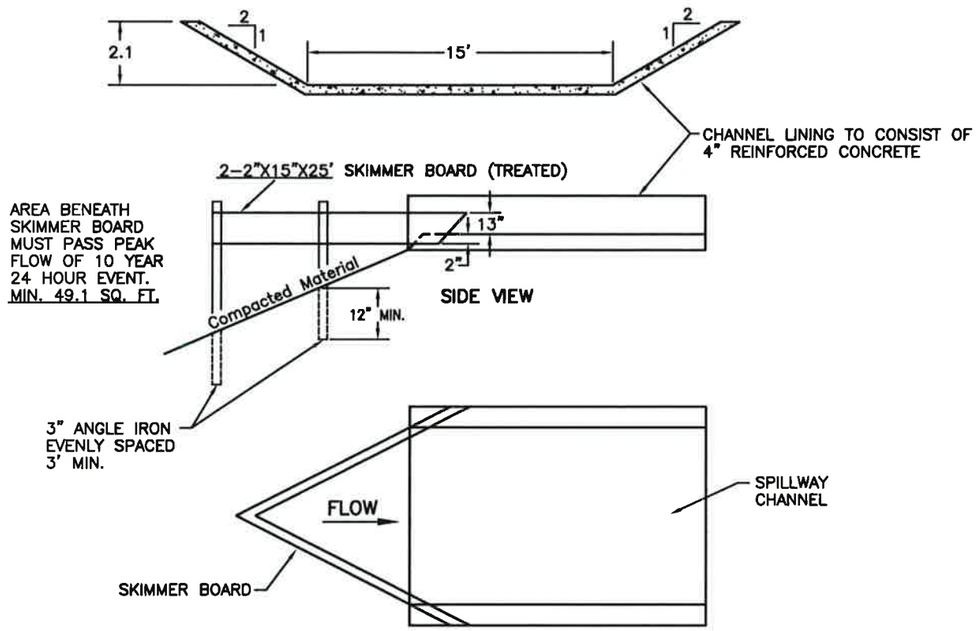

PLAN VIEW

SKIMMER BOARD DETAIL

SPILLWAY GRADIENT SHALL BE APPROXIMATELY 40%

Notes:

1. The sediment shall be removed from the basin when the accumulated sediment reaches the sediment storage volume.
2. Outer slopes of embankment shall be grassed.
3. Fill material shall be placed in 12" lifts and compacted to 95% of standard proctor.
4. The surface beneath the embankment shall be stripped of undesirable material.
5. Upon completion of mining, reclamation and maintenance of water quality standards the pond will be de-watered and reclaimed.
6. See the attached pond construction criteria.
7. See the attached drawings and specifications for diversions.
8. Elevations are based on assumed datum.
9. Channel lining within the control section of the spillway channel will extend to the maximum water elevation.

Storage Computation

Elevation (feet)	Area (acres)	Avg. Area (acres)	Interval (feet)	Storage (ac.-ft.)	Acc. Storage (ac.-ft.)
440	.000				.000
		0.160	4	0.640	
444	0.320				0.640
		0.460	4	1.840	
448	0.600				2.480
		0.815	4	3.260	
452	1.030				5.740

Key Basin Parameters

Drainage Area_____ 114.0 Acres
Disturbed Area_____ 114.0 Acres
Sediment Storage_____ 1.4 Ac. Ft.
Detention Storage_____ 1.2 Ac. Ft.
Permanent Pool Capacity___ 2.6 Ac. Ft.
Total Basin Capacity_____ 2.6 Ac. Ft.
Peak Inflow_____ 60.2 C.F.S.
Peak Outflow_____ 54.4 C.F.S.

Stage vs. Storage Curve

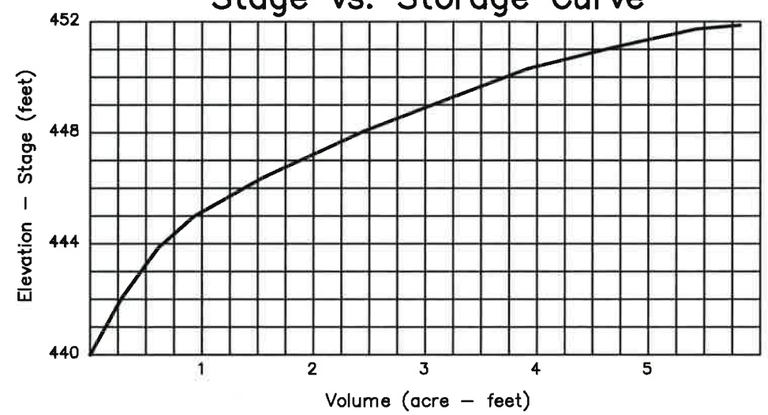

Steven R. Ingle, P.E.
AL Registration #18213

ALABAMA REGISTERED No. 18213 PROFESSIONAL ENGINEER STEVEN R. INGLE

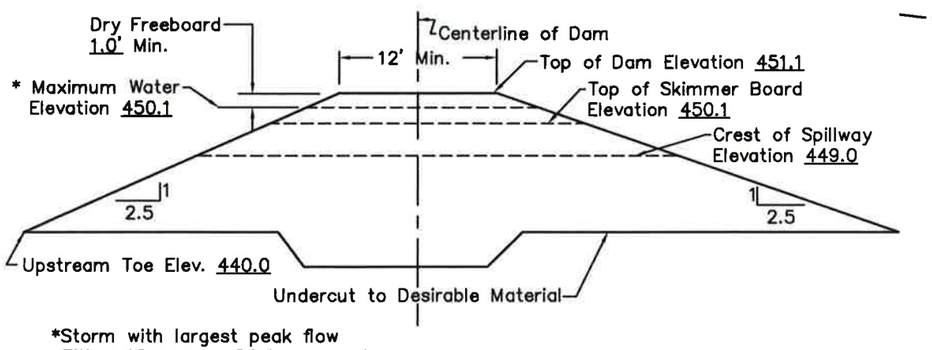

*Storm with largest peak flow
Either 10 year - 24 hour event
or 25 year - 6 hour event.

Typical Cross Section Along Spillway

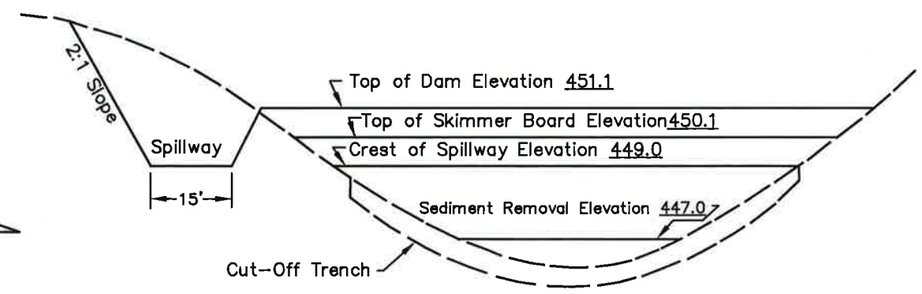

Typical Profile Looking Downstream

DRUMMOND COMPANY, INC.
P.O. BOX 1549 JASPER, AL 35502

Shannon, LLC
Shannon Mine No. 4
P-3959
Basin 008

DRAWN BY: P.T.O. DWG. NAME: DCSM4008TY	DATE: 1-9-11
APPROVED BY: S.W.	SCALE: 1"=100'

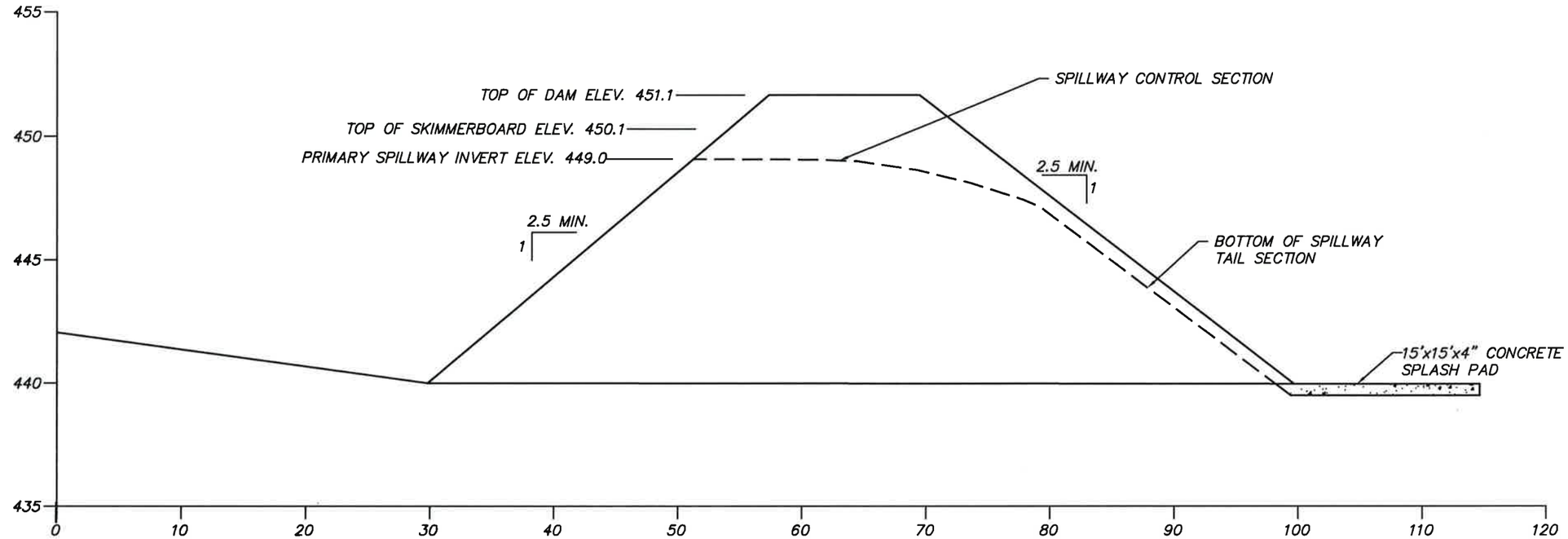

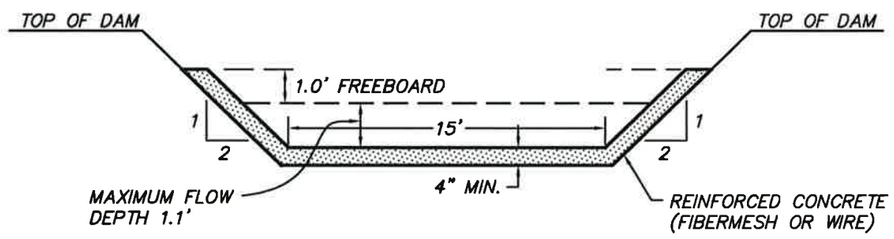

SPILLWAY CONTROL SECTION TYPICAL

N.T.S.

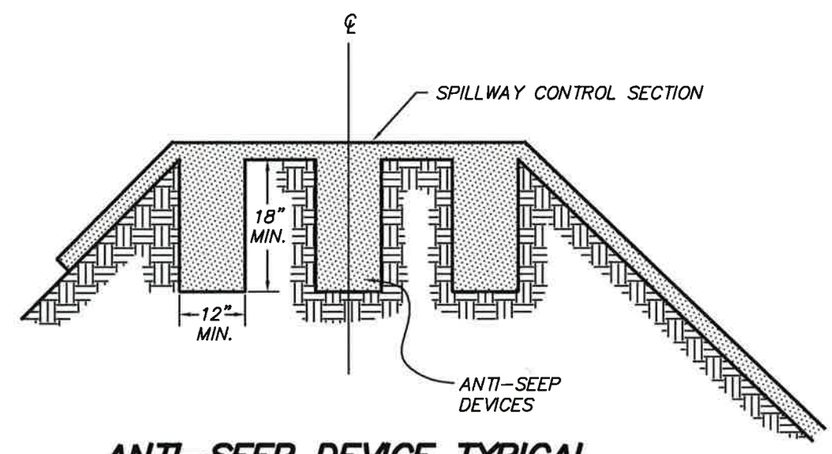

ANTI-SEEP DEVICE TYPICAL

N.T.S.

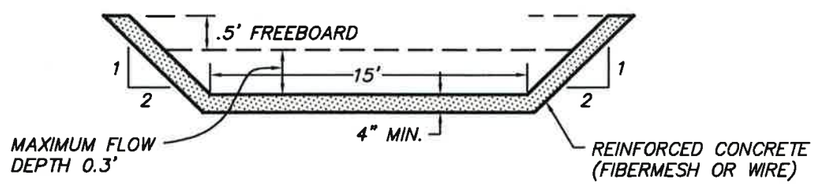

SPILLWAY TAIL SECTION TYPICAL

N.T.S.

DRUMMOND COMPANY, INC.
P.O. BOX 1549 JASPER, AL 35502
205-387-0501 OFFICE

Shannon, LLC
Shannon Mine No. 4
P-3959
Basin 008

DRAWN BY: P.T.O. DWG. NAME: DCSM4008DD	DATE: 1-13-12
APPROVED BY: S.W.	SCALE: 1"=100'

G:\Todd Odom\PTO\SW\DCSM4008DD.dwg 01/13/12 10:01

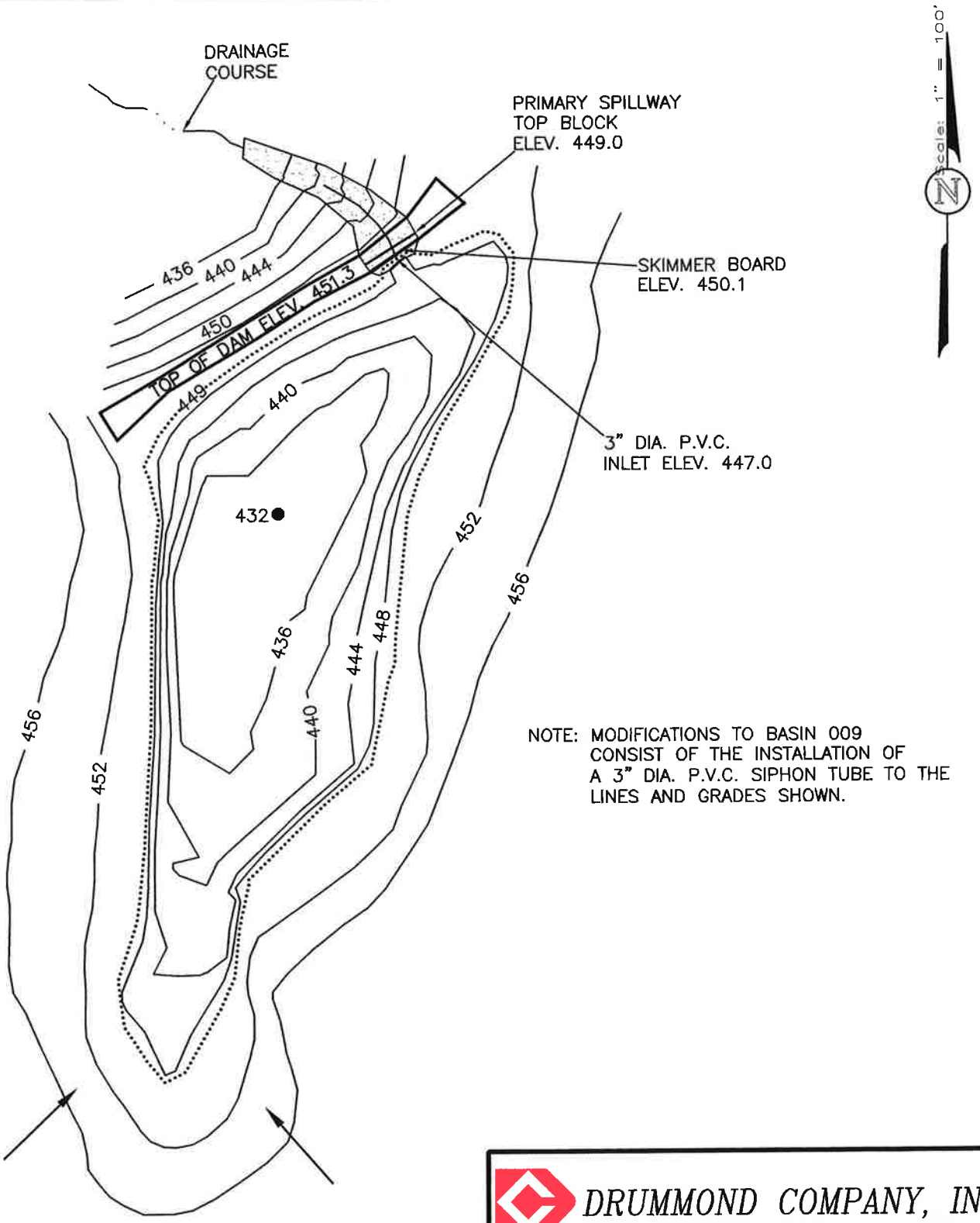

NOTE: MODIFICATIONS TO BASIN 009 CONSIST OF THE INSTALLATION OF A 3" DIA. P.V.C. SIPHON TUBE TO THE LINES AND GRADES SHOWN.

LEGEND

—420— EXISTING CONTOURS

····· NORMAL POOL ELEV. 450.0

→ MAJOR INFLOW

DRUMMOND COMPANY, INC.
P.O. BOX 1549 JASPER, AL 35502

Shannon, LLC
Shannon Mine No. 4
P-3959
Basin 009
Planview

DRAWN BY: P.T.O. DWG. NAME: DCSM4009PV	DATE: 1-5-11
APPROVED BY: S.W.	SCALE: 1"=100'

G:\Todd Odom\PTO\SW\DCSM4009PV.dwg 02/14/12 09:01

SKIMMERBOARD DETAILED DESIGN

Skimmer Board Elev. 450.1
8" Block Elev. 449.0
Q Out 104.5 C.F.S.
V Out 3.2 F.S

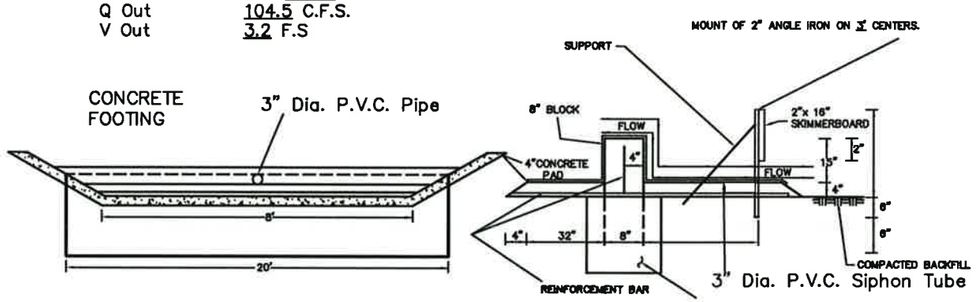

FOOTING TO BE CENTERED BENEATH 8" BLOCKS
MINIMUM WIDTH : 2.0 FEET
MINIMUM DERTH: FEET (UNLESS SOLID ROCK ENCOUNTERED)

NOTE: THE SIPHON TUBE WILL BE RESTRAINED WITH STRAPS WHERE NECESSARY.

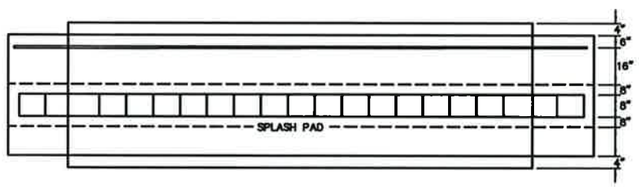

PLAN VIEW

SPILLWAY GRADIANT SHALL BE APPROXIMATELY 3%.

Notes:

1. The sediment shall be removed from the basin when the accumulated sediment reaches the sediment storage volume.
2. Sediment control structures are required on pond inlets.
3. Outer slopes of embankment shall be grassed.
4. Fill material shall be placed in 12" lifts and compacted to 95% of standard proctor.
5. The surface beneath the embankment shall be stripped of undesirable material.
6. Upon completion of mining, reclamationn and maintenance of water quality standards the pond will be de-watered and reclaimed.
7. See the attached pond construction criteria.
8. See the attached drawings and specifications for diversions.
9. Elevations are based on assumed datum.

Stage vs. Storage Curve

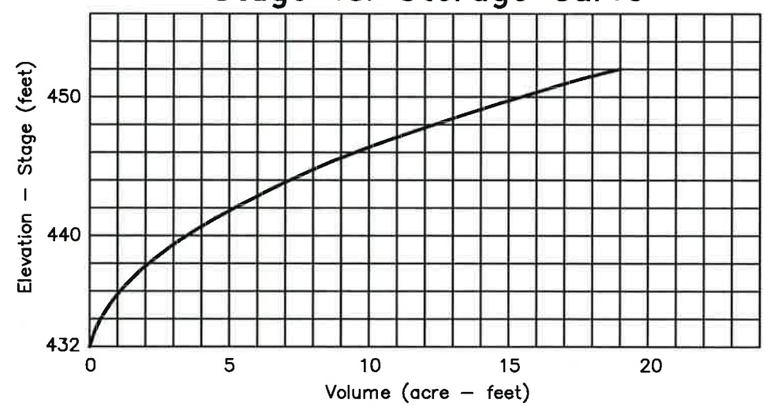

Storage Computation

Elevation (feet)	Area (acres)	Avg. Area (acres)	Interval (feet)	Storage (ac.-ft.)	Acc. Storage (ac.-ft.)
432	.000				.000
		0.210	4	0.84	
436	0.42				0.84
		0.605	4	2.42	
440	0.79				3.26
		0.965	4	3.86	
444	1.14				7.12
		1.270	4	5.08	
448	1.40				12.20
		1.645	4	6.58	
452	1.89				18.78

Key Basin Parameters

Drainage Area_____ 69 Acres
Disturbed Area_____ 67 Acres
Sediment Storage_____ 5.7 Ac. Ft.
Detention Storage_____ 7.6 Ac. Ft.
Full Pool Capacity_____ 13.3 Ac. Ft.
Normal Pool Capacity_____ 10.5 Ac. Ft.
Total Basin Capacity_____ 13.3 Ac. Ft.
Peak Inflow_____ 158.0 C.F.S.
Peak Outflow_____ 104.5 C.F.S.

Steven R. Ingle, P.E.
AL Registration #18213

ALABAMA REGISTERED No. 18213 PROFESSIONAL ENGINEER STEVEN R. INGLE

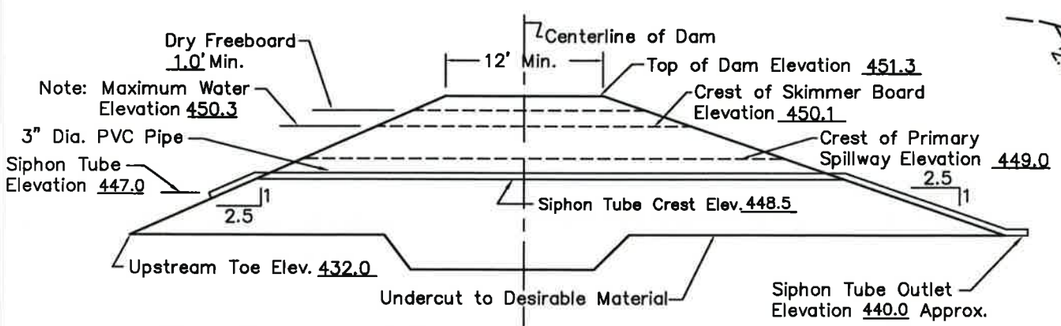

*Storm with largest peak flow
Either 10 year - 24 hour event
or 25 year - 6 hour event.

Typical Cross Section
Along Primary Spillway

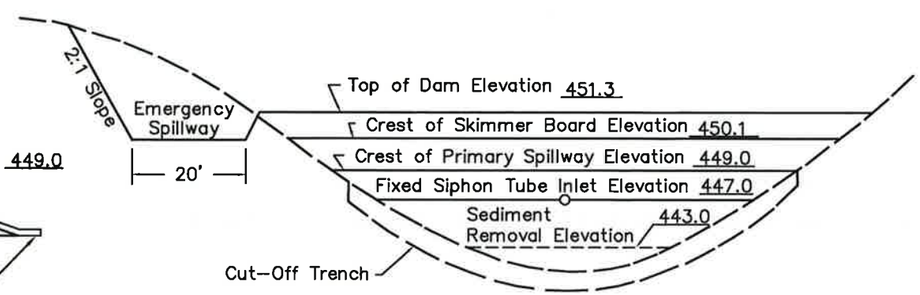

Typical Profile Looking Downstream

DRUMMOND COMPANY, INC.
P.O. BOX 1549 JASPER, AL 35502

Shannon, LLC
Shannon Mine No. 4
P-3959
Basin 009

DRAWN BY: P.T.O. DWG. NAME: DCSM4009TY	DATE: 1-5-11
APPROVED BY: S.W.	SCALE: NONE

G:\Todd Odom\PTO\SW\DCSM4009TY.dwg 02/14/12 12:03

SKIMMERBOARD DETAILED DESIGN

SKIMMER BOARD ELEV. 450.1
8" BLOCK ELEV. 449.0
Q OUT 104.5 C.F.S.
V OUT 3.2 F.S

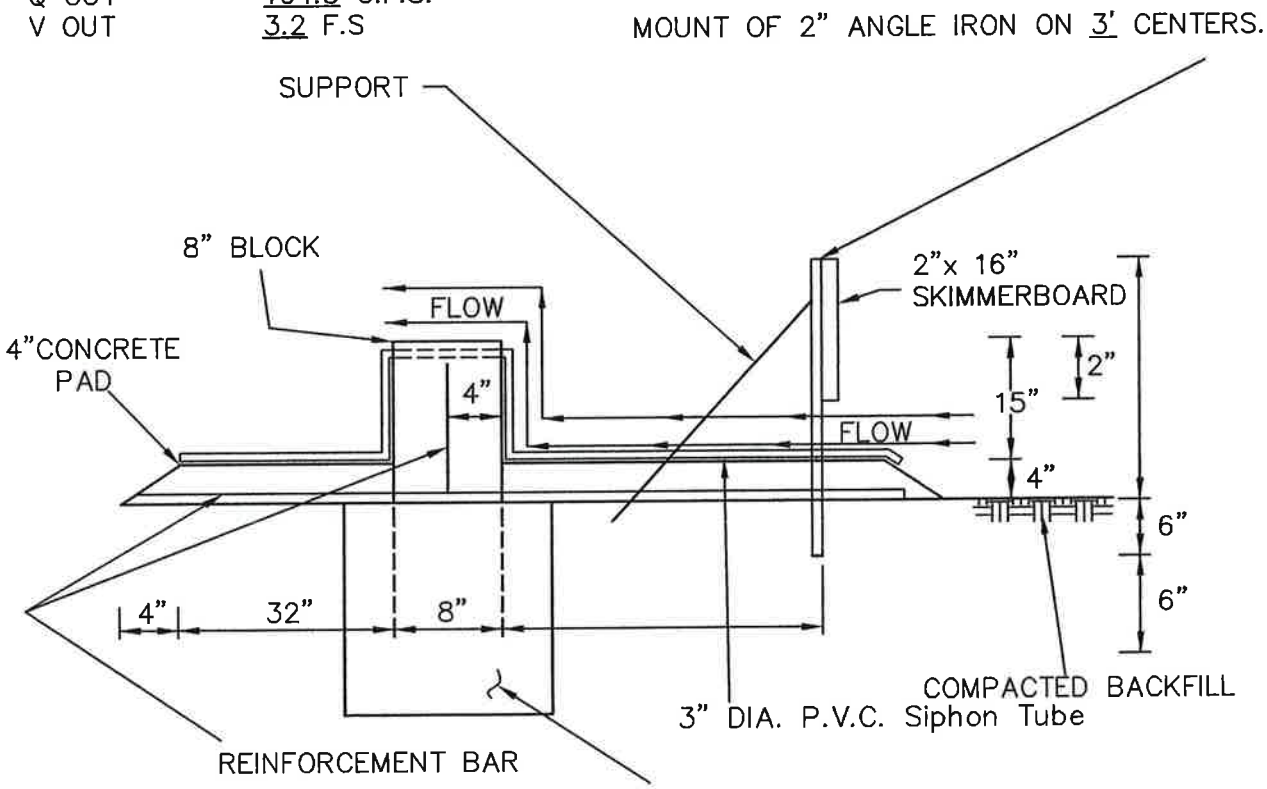

FOOTING TO BE CENTERED BENEATH 8" BLOCKS
MINIMUM WIDTH : 2.0 FEET
MINIMUM DERTH: FEET (UNLESS SOLID ROCK ENCOUNTERED)

NOTE: THE SIPHON TUBE WILL BE RESTRAINED WITH STRAPS WHERE NECESSARY.

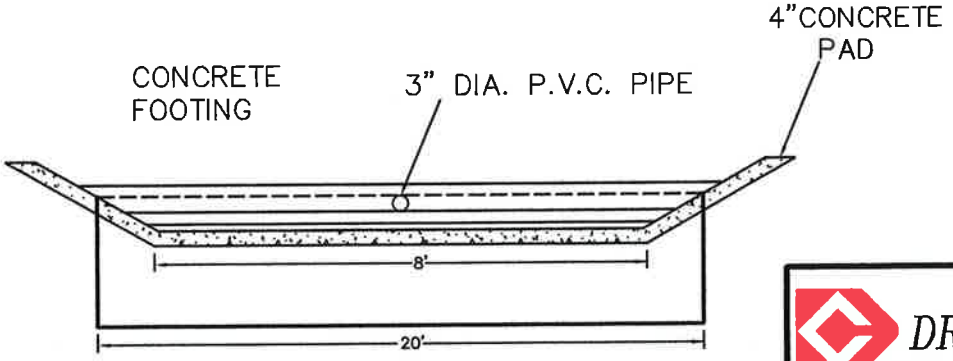

DRUMMOND COMPANY, INC.
P.O. BOX 1549 JASPER, AL 35502

Shannon, LLC
Shannon Mine No. 4
P-3959
Basin 009

DRAWN BY: P.T.O. DWG. NAME: DCSM4009TY	DATE: 1-5-11
APPROVED BY: S.W.	SCALE: NONE

Copyright 1998 -2010 Pamela L Schwab

Shannon LLC

Shannon Mine No. 4

P-3959

Basin 002 & 002B

6.0 Inches, 10 Year-24 Hour

DRN 58

SEW

General Information

Storm Information:

Storm Type:	DRN 58
Design Storm:	10 yr - 24 hr
Rainfall Depth:	6.000 inches

Particle Size Distribution:

Size (mm)	Topsoil	Spoil
3.0000	100.000%	100.000%
2.0000	96.000%	94.000%
1.0000	89.500%	74.500%
0.5000	82.500%	49.000%
0.3000	77.500%	39.000%
0.2000	71.500%	32.000%
0.1000	63.000%	24.500%
0.0500	41.000%	16.000%
0.0300	37.000%	13.000%
0.0200	11.000%	8.000%
0.0100	2.500%	3.000%
0.0050	2.500%	3.000%
0.0030	2.500%	3.000%
0.0010	2.500%	3.000%
0.0001	0.000%	0.000%

Structure Networking:

Type	Stru #	(flows into)	Stru #	Musk. K (hrs)	Musk. X	Description
Pond	#1	==>	#2	0.005	0.424	Basin 002B
Pond	#2	==>	End	0.000	0.000	Basin 002

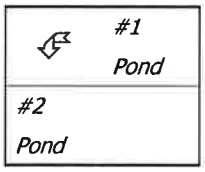

Structure Routing Details:

Stru #	Land Flow Condition	Slope (%)	Vert. Dist. (ft)	Horiz. Dist. (ft)	Velocity (fps)	Time (hrs)
#1	8. Large gullies, diversions, and low flowing streams	10.00	20.00	200.00	9.48	0.005
#1	**Muskingum K:**					**0.005**

Structure Summary:

		Immediate Contributing Area (ac)	Total Contributing Area (ac)	Peak Discharge (cfs)	Total Runoff Volume (ac-ft)	Sediment (tons)	Peak Sediment Conc. (mg/l)	Peak Settleable Conc. (ml/l)	24VW (ml/l)
#1	In	166.000	166.000	201.86	51.87	13,452.4	302,732	231.35	133.57
	Out			192.64	51.87	561.7	16,917	3.39	1.60
#2	In	169.000	335.000	389.81	104.36	13,980.6	169,247	125.07	69.80
	Out			384.43	93.30	792.0	15,404	0.00	0.00

Particle Size Distribution(s) at Each Structure

Structure #1 (Basin 002B):

Size (mm)	In	Out
3.0000	100.000%	100.000%
2.0000	97.427%	100.000%
1.0000	77.216%	100.000%
0.5000	50.786%	100.000%
0.3000	40.422%	100.000%
0.2000	33.167%	100.000%
0.1000	25.393%	100.000%
0.0500	16.583%	100.000%
0.0300	13.474%	100.000%
0.0200	8.292%	100.000%
0.0100	3.109%	74.468%
0.0050	3.109%	74.468%
0.0030	3.109%	74.468%
0.0010	3.109%	74.468%
0.0001	0.000%	0.000%

Structure #2:

Size (mm)	In	Out
3.0000	100.000%	100.000%
2.0000	99.053%	100.000%
1.0000	79.338%	100.000%
0.5000	53.557%	100.000%
0.3000	43.447%	100.000%
0.2000	36.370%	100.000%
0.1000	28.787%	100.000%
0.0500	20.194%	100.000%
0.0300	17.161%	100.000%
0.0200	12.106%	100.000%
0.0100	6.025%	100.000%
0.0050	6.025%	100.000%
0.0030	6.025%	100.000%

Size (mm)	In	Out
0.0010	6.025%	100.000%
0.0001	0.000%	0.000%

Structure Detail:

Structure #1 (Pond)

Basin 002B

Pond Inputs:

Initial Pool Elev:	521.70 ft
Initial Pool:	3.85 ac-ft
*Sediment Storage:	15.34 ac-ft
Dead Space:	20.00 %

**Sediment capacity was entered by user*

Emergency Spillway

Spillway Elev	Crest Length (ft)	Left Sideslope	Right Sideslope	Bottom Width (ft)
521.70	10.00	2.00:1	2.00:1	35.00

Pond Results:

Peak Elevation:	523.21 ft
H'graph Detention Time:	0.47 hrs
Pond Model:	CSTRS
Dewater Time:	0.66 days
Trap Efficiency:	95.82 %

Dewatering time is calculated from peak stage to lowest spillway

Elevation-Capacity-Discharge Table

Elevation	Area (ac)	Capacity (ac-ft)	Discharge (cfs)	Dewater Time (hrs)	
520.50	3.039	0.000	0.000		Top of Sed. Storage
520.50	3.039	0.001	0.000		
521.00	3.181	1.555	0.000		
521.50	3.326	3.182	0.000		
521.70	3.385	3.853	0.000		Spillway #1
522.00	3.474	4.882	23.849	9.20	
522.50	3.626	6.657	63.599	5.70	
523.00	3.781	8.509	147.127	0.75	
523.21	3.848	9.320	192.637	0.20	Peak Stage
523.50	3.939	10.438	255.297		
524.00	4.100	12.448	382.707		
524.50	4.242	14.533	529.705		

Elevation	Area (ac)	Capacity (ac-ft)	Discharge (cfs)	Dewater Time (hrs)
525.00	4.386	16.690	695.607	
525.50	4.532	18.919	880.012	
526.00	4.681	21.222	1,082.691	
526.50	4.832	23.600	1,303.529	
527.00	4.986	26.055	1,542.489	
527.50	5.142	28.586	1,799.593	
528.00	5.300	31.197	2,074.903	

Detailed Discharge Table

Elevation (ft)	Emergency Spillway (cfs)	Combined Total Discharge (cfs)
520.50	0.000	0.000
520.50	0.000	0.000
521.00	0.000	0.000
521.50	0.000	0.000
521.70	0.000	0.000
522.00	23.849	23.849
522.50	63.599	63.599
523.00	147.127	147.127
523.50	255.297	255.297
524.00	382.707	382.707
524.50	529.705	529.705
525.00	695.607	695.607
525.50	880.012	880.012
526.00	1,082.691	1,082.691
526.50	1,303.529	1,303.529
527.00	1,542.489	1,542.489
527.50	1,799.593	1,799.593
528.00	2,074.903	2,074.903

Structure #2 (Pond)

Basin 002

Pond Inputs:

Initial Pool Elev:	503.00 ft
Initial Pool:	2.11 ac-ft
*Sediment Storage:	4.77 ac-ft
Dead Space:	20.00 %

**Sediment capacity was entered by user*

Emergency Spillway

Spillway Elev	Crest Length (ft)	Left Sideslope	Right Sideslope	Bottom Width (ft)
506.50	1.00	2.00:1	2.00:1	120.00

Fixed Siphon

Crest Elev	Inlet Elev	Outlet Elev	Diameter (in)	Length (ft)	Manning's n
506.00	503.00	495.00	3.00	100.00	0.0140

Pond Results:

Peak Elevation:	507.53 ft
H'graph Detention Time:	1.17 hrs
Pond Model:	CSTRS
Dewater Time:	13.38 days
Trap Efficiency:	94.33 %

Dewatering time is calculated from peak stage to lowest spillway

Elevation-Capacity-Discharge Table

Elevation	Area (ac)	Capacity (ac-ft)	Discharge (cfs)	Dewater Time (hrs)	
502.00	1.836	0.000	0.000		Top of Sed. Storage
502.00	1.836	0.000	0.000		
502.50	2.107	0.985	0.000		
503.00	2.396	2.110	0.000		
503.50	2.704	3.384	0.430	35.83*	
504.00	3.030	4.817	0.444	39.04*	
504.50	3.295	6.398	0.458	41.81*	
505.00	3.571	8.114	0.471	44.12*	
505.50	3.859	9.971	0.484	46.47*	
506.00	4.157	11.974	0.496	48.86*	Spillway #2
506.50	4.466	14.130	0.508	51.29*	Spillway #1
506.60	4.530	14.580	24.242	1.90	
506.70	4.594	15.036	47.976	5.15	
507.00	4.787	16.443	119.169	5.65	
507.50	5.118	18.919	368.541	0.95	
507.53	5.140	19.051	384.434	0.05	Peak Stage
508.00	5.460	21.563	685.877		

Elevation	Area (ac)	Capacity (ac-ft)	Discharge (cfs)	Dewater Time (hrs)
508.50	5.544	24.314	1,064.166	
509.00	5.629	27.107	1,497.403	
509.50	5.714	29.942	1,980.943	
510.00	5.800	32.821	2,511.497	

**Designates time(s) to dewater have been extrapolated beyond the 50 hour hydrograph limit.*

Detailed Discharge Table

Elevation (ft)	Emergency Spillway (cfs)	Fixed Siphon (cfs)	Combined Total Discharge (cfs)
502.00	0.000	0.000	0.000
502.00	0.000	0.000	0.000
502.50	0.000	0.000	0.000
503.00	0.000	0.000	0.000
503.50	0.000	0.000	0.430
504.00	0.000	0.000	0.444
504.50	0.000	0.000	0.458
505.00	0.000	0.000	0.471
505.50	0.000	0.000	0.484
506.00	0.000	0.000	0.496
506.50	0.000	0.000	0.508
506.60	23.731	0.000	24.242
506.70	47.462	0.000	47.976
507.00	118.649	0.000	119.169
507.50	368.008	0.000	368.541
508.00	685.333	0.000	685.877
508.50	1,063.611	0.000	1,064.166
509.00	1,496.837	0.000	1,497.403
509.50	1,980.366	0.000	1,980.943
510.00	2,510.909	0.000	2,511.497

Subwatershed Hydrology Detail:

Stru #	SWS #	SWS Area (ac)	Time of Conc (hrs)	Musk K (hrs)	Musk X	Curve Number	UHS	Peak Discharge (cfs)	Runoff Volume (ac-ft)
#1	1	163.000	0.187	0.000	0.000	81.000	F	198.51	50.371
	2	3.000	0.000	0.000	0.000	100.000	S	4.72	1.498
	Σ	**166.000**						**201.86**	**51.869**
#2	1	165.000	0.323	0.000	0.000	81.000	F	195.23	50.489
	2	4.000	0.001	0.000	0.000	100.000	S	6.29	1.998
	Σ	**335.000**						**389.81**	**104.356**

Subwatershed Sedimentology Detail:

Stru #	SWS #	Soil K	L (ft)	S (%)	C	P	PS #	Sediment (tons)	Peak Sediment Conc. (mg/l)	Peak Settleable Conc (ml/l)	24VW (ml/l)
#1	1	0.240	200.00	15.00	0.9000	1.0000	2	13,452.4	305,162	233.21	136.94
	2	0.001	200.00	0.01	0.0001	1.0000	2	0.0	0	0.00	0.00
	Σ							**13,452.4**	**302,732**	**231.35**	**133.57**
#2	1	0.240	200.00	15.00	0.9000	1.0000	2	13,418.9	303,536	231.79	136.30
	2	0.001	200.00	0.01	0.0001	1.0000	2	0.0	0	0.00	0.00
	Σ							**13,980.6**	**169,247**	**125.07**	**69.80**

Subwatershed Time of Concentration Details:

Stru #	SWS #	Land Flow Condition	Slope (%)	Vert. Dist. (ft)	Horiz. Dist. (ft)	Velocity (fps)	Time (hrs)
#1	1	8. Large gullies, diversions, and low flowing streams	2.50	80.00	3,200.00	4.740	0.187
#1	**1**	**Time of Concentration:**					**0.187**

Copyright 1998 -2010 Pamela J. Schwab

Shannon LLC

Shannon Mine No. 4

P-3959

Basin 002 & 002B

4.8 Inches, 25 Year-6 Hour

SCS 6 Hour

SEW

General Information

Storm Information:

Storm Type:	Rainfall Event

Accumulated Time (hrs)	Accumulated Depth (in)
0.00	0.0000
0.50	0.1680
1.00	0.3840
1.50	0.6480
2.00	1.1040
2.50	2.8800
3.00	3.3600
3.50	3.7440
4.00	4.0080
4.50	4.2480
5.00	4.4440
5.50	4.6350
6.00	4.8000

Peak 30-minute Intensity: 3.552 in/hr

Particle Size Distribution:

Size (mm)	Topsoil	Spoil
3.0000	100.000%	100.000%
2.0000	96.000%	94.000%
1.0000	89.500%	74.500%
0.5000	82.500%	49.000%
0.3000	77.500%	39.000%
0.2000	71.500%	32.000%
0.1000	63.000%	24.500%
0.0500	41.000%	16.000%
0.0300	37.000%	13.000%
0.0200	11.000%	8.000%
0.0100	2.500%	3.000%
0.0050	2.500%	3.000%
0.0030	2.500%	3.000%

Size (mm)	Topsoil	Spoil
0.0010	2.500%	3.000%
0.0001	0.000%	0.000%

Structure Networking:

Type	Stru #	(flows into)	Stru #	Musk. K (hrs)	Musk. X	Description
Pond	#1	==>	#2	0.005	0.424	Basin 002B
Pond	#2	==>	End	0.000	0.000	Basin 002

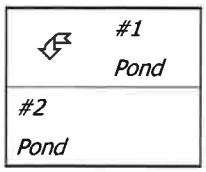

Structure Routing Details:

Stru #	Land Flow Condition	Slope (%)	Vert. Dist. (ft)	Horiz. Dist. (ft)	Velocity (fps)	Time (hrs)
#1	8. Large gullies, diversions, and low flowing streams	10.00	20.00	200.00	9.48	0.005
#1	**Muskingum K:**					**0.005**

Structure Summary:

		Immediate Contributing Area (ac)	Total Contributing Area (ac)	Peak Discharge (cfs)	Total Runoff Volume (ac-ft)	Sediment (tons)	Peak Sediment Conc. (mg/l)	Peak Settleable Conc. (ml/l)	24VW (ml/l)
#1	In	166.000	166.000	378.41	37.63	16,034.8	429,061	327.14	209.69
	Out			295.53	37.63	804.0	29,106	7.81	4.19
#2	In	169.000	335.000	633.09	75.75	15,913.2	242,630	177.52	105.63
	Out			516.58	65.41	438.9	15,268	0.00	0.00

Particle Size Distribution(s) at Each Structure

Structure #1 (Basin 002B):

Size (mm)	In	Out
3.0000	100.000%	100.000%
2.0000	100.000%	100.000%
1.0000	81.032%	100.000%
0.5000	53.296%	100.000%
0.3000	42.419%	100.000%
0.2000	34.806%	100.000%
0.1000	26.648%	100.000%
0.0500	17.403%	100.000%
0.0300	14.140%	100.000%
0.0200	8.701%	100.000%
0.0100	3.263%	65.079%
0.0050	3.263%	65.079%
0.0030	3.263%	65.079%
0.0010	3.263%	65.079%
0.0001	0.000%	0.000%

Structure #2:

Size (mm)	In	Out
3.0000	100.000%	100.000%
2.0000	100.000%	100.000%
1.0000	87.810%	100.000%
0.5000	59.478%	100.000%
0.3000	48.367%	100.000%
0.2000	40.590%	100.000%
0.1000	32.257%	100.000%
0.0500	22.813%	100.000%
0.0300	19.480%	100.000%
0.0200	13.924%	100.000%
0.0100	6.621%	100.000%
0.0050	6.621%	100.000%
0.0030	6.621%	100.000%

Size (mm)	In	Out
0.0010	6.621%	100.000%
0.0001	0.000%	0.000%

Structure Detail:

Structure #1 (Pond)

Basin 002B

Pond Inputs:

Initial Pool Elev:	521.70 ft
Initial Pool:	3.85 ac-ft
*Sediment Storage:	15.34 ac-ft
Dead Space:	20.00 %

**Sediment capacity was entered by user*

Emergency Spillway

Spillway Elev	Crest Length (ft)	Left Sideslope	Right Sideslope	Bottom Width (ft)
521.70	10.00	2.00:1	2.00:1	35.00

Pond Results:

Peak Elevation:	523.66 ft
H'graph Detention Time:	0.42 hrs
Pond Model:	CSTRS
Dewater Time:	0.35 days
Trap Efficiency:	94.99 %

Dewatering time is calculated from peak stage to lowest spillway

Elevation-Capacity-Discharge Table

Elevation	Area (ac)	Capacity (ac-ft)	Discharge (cfs)	Dewater Time (hrs)	
520.50	3.039	0.000	0.000		Top of Sed. Storage
520.50	3.039	0.001	0.000		
521.00	3.181	1.555	0.000		
521.50	3.326	3.182	0.000		
521.70	3.385	3.853	0.000		Spillway #1
522.00	3.474	4.882	23.849	4.40	
522.50	3.626	6.657	63.599	1.85	
523.00	3.781	8.509	147.127	1.60	
523.50	3.939	10.438	255.297	0.40	
523.66	3.991	11.073	295.525	0.10	Peak Stage
524.00	4.100	12.448	382.707		
524.50	4.242	14.533	529.705		

Elevation	Area (ac)	Capacity (ac-ft)	Discharge (cfs)	Dewater Time (hrs)
525.00	4.386	16.690	695.607	
525.50	4.532	18.919	880.012	
526.00	4.681	21.222	1,082.691	
526.50	4.832	23.600	1,303.529	
527.00	4.986	26.055	1,542.489	
527.50	5.142	28.586	1,799.593	
528.00	5.300	31.197	2,074.903	

Detailed Discharge Table

Elevation (ft)	Emergency Spillway (cfs)	Combined Total Discharge (cfs)
520.50	0.000	0.000
520.50	0.000	0.000
521.00	0.000	0.000
521.50	0.000	0.000
521.70	0.000	0.000
522.00	23.849	23.849
522.50	63.599	63.599
523.00	147.127	147.127
523.50	255.297	255.297
524.00	382.707	382.707
524.50	529.705	529.705
525.00	695.607	695.607
525.50	880.012	880.012
526.00	1,082.691	1,082.691
526.50	1,303.529	1,303.529
527.00	1,542.489	1,542.489
527.50	1,799.593	1,799.593
528.00	2,074.903	2,074.903

Structure #2 (Pond)

Basin 002

Pond Inputs:

Initial Pool Elev:	503.00 ft
Initial Pool:	2.11 ac-ft
*Sediment Storage:	4.77 ac-ft
Dead Space:	20.00 %

**Sediment capacity was entered by user*

Emergency Spillway

Spillway Elev	Crest Length (ft)	Left Sideslope	Right Sideslope	Bottom Width (ft)
506.50	1.00	2.00:1	2.00:1	120.00

Fixed Siphon

Crest Elev	Inlet Elev	Outlet Elev	Diameter (in)	Length (ft)	Manning's n
506.00	503.00	495.00	3.00	100.00	0.0140

Pond Results:

Peak Elevation:	507.73 ft
H'graph Detention Time:	1.11 hrs
Pond Model:	CSTRS
Dewater Time:	13.06 days
Trap Efficiency:	97.24 %

Dewatering time is calculated from peak stage to lowest spillway

Elevation-Capacity-Discharge Table

Elevation	Area (ac)	Capacity (ac-ft)	Discharge (cfs)	Dewater Time (hrs)	
502.00	1.836	0.000	0.000		Top of Sed. Storage
502.00	1.836	0.000	0.000		
502.50	2.107	0.985	0.000		
503.00	2.396	2.110	0.000		
503.50	2.704	3.384	0.430	35.83*	
504.00	3.030	4.817	0.444	39.04*	
504.50	3.295	6.398	0.458	41.81*	
505.00	3.571	8.114	0.471	44.12*	
505.50	3.859	9.971	0.484	46.47*	
506.00	4.157	11.974	0.496	48.86*	Spillway #2
506.50	4.466	14.130	0.508	51.29*	Spillway #1
506.60	4.530	14.580	24.242	1.95	
506.70	4.594	15.036	47.976	0.30	
507.00	4.787	16.443	119.169	1.65	
507.50	5.118	18.919	368.541	1.95	
507.73	5.281	20.152	516.581	0.25	Peak Stage
508.00	5.460	21.563	685.877		

Elevation	Area (ac)	Capacity (ac-ft)	Discharge (cfs)	Dewater Time (hrs)
508.50	5.544	24.314	1,064.166	
509.00	5.629	27.107	1,497.403	
509.50	5.714	29.942	1,980.943	
510.00	5.800	32.821	2,511.497	

**Designates time(s) to dewater have been extrapolated beyond the 50 hour hydrograph limit.*

Detailed Discharge Table

Elevation (ft)	Emergency Spillway (cfs)	Fixed Siphon (cfs)	Combined Total Discharge (cfs)
502.00	0.000	0.000	0.000
502.00	0.000	0.000	0.000
502.50	0.000	0.000	0.000
503.00	0.000	0.000	0.000
503.50	0.000	0.000	0.430
504.00	0.000	0.000	0.444
504.50	0.000	0.000	0.458
505.00	0.000	0.000	0.471
505.50	0.000	0.000	0.484
506.00	0.000	0.000	0.496
506.50	0.000	0.000	0.508
506.60	23.731	0.000	24.242
506.70	47.462	0.000	47.976
507.00	118.649	0.000	119.169
507.50	368.008	0.000	368.541
508.00	685.333	0.000	685.877
508.50	1,063.611	0.000	1,064.166
509.00	1,496.837	0.000	1,497.403
509.50	1,980.366	0.000	1,980.943
510.00	2,510.909	0.000	2,511.497

Subwatershed Hydrology Detail:

Stru #	SWS #	SWS Area (ac)	Time of Conc (hrs)	Musk K (hrs)	Musk X	Curve Number	UHS	Peak Discharge (cfs)	Runoff Volume (ac-ft)
#1	1	163.000	0.187	0.000	0.000	81.000	F	375.51	36.435
	2	3.000	0.000	0.000	0.000	100.000	S	10.74	1.196
	Σ	**166.000**						**378.41**	**37.631**
#2	1	165.000	0.323	0.000	0.000	81.000	F	333.69	36.521
	2	4.000	0.001	0.000	0.000	100.000	S	14.33	1.595
	Σ	**335.000**						**633.09**	**75.747**

Subwatershed Sedimentology Detail:

Stru #	SWS #	Soil K	L (ft)	S (%)	C	P	PS #	Sediment (tons)	Peak Sediment Conc. (mg/l)	Peak Settleable Conc (ml/l)	24VW (ml/l)
#1	1	0.240	200.00	15.00	0.9000	1.0000	2	16,034.8	431,805	329.23	215.21
	2	0.001	200.00	0.01	0.0001	1.0000	2	0.0	0	0.00	0.00
	Σ							**16,034.8**	**429,061**	**327.14**	**209.69**
#2	1	0.240	200.00	15.00	0.9000	1.0000	2	15,111.8	398,797	302.93	203.47
	2	0.001	200.00	0.01	0.0001	1.0000	2	0.0	0	0.00	0.00
	Σ							**15,913.2**	**242,630**	**177.52**	**105.63**

Subwatershed Time of Concentration Details:

Stru #	SWS #	Land Flow Condition	Slope (%)	Vert. Dist. (ft)	Horiz. Dist. (ft)	Velocity (fps)	Time (hrs)
#1	1	8. Large gullies, diversions, and low flowing streams	2.50	80.00	3,200.00	4.740	0.187
#1	**1**	**Time of Concentration:**					**0.187**

Copyright 1998 -2002 Pamela L Schwab

Shannon LLC

Shannon Mine No. 4

P-3959

Basin 003 & 003A Re-Evaluation

6.0 Inches, 10 Year-24 Hour

DRN 58

SEW

General Information

Storm Information:

Storm Type:	DRN 58
Design Storm:	10 yr - 24 hr
Rainfall Depth:	6.000 inches

Particle Size Distribution:

Size (mm)	Topsoil	Spoil
3.0000	100.000%	100.000%
2.0000	96.000%	94.000%
1.0000	89.500%	74.500%
0.5000	82.500%	49.000%
0.3000	77.500%	39.000%
0.2000	71.500%	32.000%
0.1000	63.000%	24.500%
0.0500	41.000%	16.000%
0.0300	37.000%	13.000%
0.0200	11.000%	8.000%
0.0100	2.500%	3.000%
0.0050	2.500%	3.000%
0.0030	2.500%	3.000%
0.0010	2.500%	3.000%
0.0001	0.000%	0.000%

Structure Networking:

Type	Stru #	(flows into)	Stru #	Musk. K (hrs)	Musk. X	Description
Pond	#1	==>	#2	0.000	0.000	Basin 003A
Pond	#2	==>	End	0.000	0.000	Basin 003

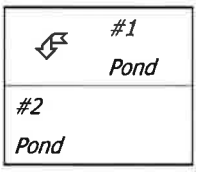

Structure Summary:

		Immediate Contributing Area (ac)	Total Contributing Area (ac)	Peak Discharge (cfs)	Total Runoff Volume (ac-ft)	Sediment (tons)	Peak Sediment Conc. (mg/l)	Peak Settleable Conc. (ml/l)	24VW (ml/l)
#1	In	105.000	105.000	127.94	32.88	2,997.5	115,592	88.34	49.72
	Out			118.92	32.88	126.1	5,899	1.21	0.66
#2	In	188.000	293.000	292.79	80.07	2,413.6	41,187	30.14	16.95
	Out			259.95	80.04	186.9	3,226	0.22	0.13

Particle Size Distribution(s) at Each Structure

Structure #1 (Basin 003A):

Size (mm)	In	Out
3.0000	100.000%	100.000%
2.0000	97.332%	100.000%
1.0000	77.141%	100.000%
0.5000	50.737%	100.000%
0.3000	40.382%	100.000%
0.2000	33.134%	100.000%
0.1000	25.368%	100.000%
0.0500	16.567%	100.000%
0.0300	13.461%	100.000%
0.0200	8.284%	100.000%
0.0100	3.106%	73.867%
0.0050	3.106%	73.867%
0.0030	3.106%	73.867%
0.0010	3.106%	73.867%
0.0001	0.000%	0.000%

Structure #2:

Size (mm)	In	Out
3.0000	100.000%	100.000%
2.0000	99.157%	100.000%
1.0000	79.705%	100.000%
0.5000	54.268%	100.000%
0.3000	44.292%	100.000%
0.2000	37.304%	100.000%
0.1000	29.804%	100.000%
0.0500	21.275%	100.000%
0.0300	18.274%	100.000%
0.0200	13.228%	100.000%
0.0100	6.856%	88.532%
0.0050	6.856%	88.532%
0.0030	6.856%	88.532%
0.0010	6.856%	88.532%

Size (mm)	In	Out
0.0001	0.000%	0.000%

Structure Detail:

Structure #1 (Pond)

Basin 003A

Pond Inputs:

Initial Pool Elev:	521.50 ft
Initial Pool:	4.13 ac-ft
*Sediment Storage:	10.31 ac-ft
Dead Space:	20.00 %

**Sediment capacity was entered by user*

Emergency Spillway

Spillway Elev	Crest Length (ft)	Left Sideslope	Right Sideslope	Bottom Width (ft)
521.50	10.00	2.00:1	2.00:1	15.00

Pond Results:

Peak Elevation:	523.29 ft
H'graph Detention Time:	1.08 hrs
Pond Model:	CSTRS
Dewater Time:	0.69 days
Trap Efficiency:	95.79 %

Dewatering time is calculated from peak stage to lowest spillway

Elevation-Capacity-Discharge Table

Elevation	Area (ac)	Capacity (ac-ft)	Discharge (cfs)	Dewater Time (hrs)	
519.50	1.874	0.000	0.000		Top of Sed. Storage
519.50	1.874	0.000	0.000		
520.00	1.970	0.961	0.000		
520.50	2.064	1.969	0.000		
521.00	2.159	3.025	0.000		
521.50	2.257	4.129	0.000		Spillway #1
522.00	2.358	5.283	3.103	4.50*	
522.50	2.460	6.487	41.275	11.10	
523.00	2.564	7.743	86.470	0.70	
523.29	2.627	8.504	118.925	0.30	Peak Stage
523.50	2.671	9.052	142.306		
524.00	2.780	10.415	210.030		

Detailed Discharge Table

Elevation (ft)	Emergency Spillway (cfs)	Combined Total Discharge (cfs)
519.50	0.000	0.000
519.50	0.000	0.000
520.00	0.000	0.000
520.50	0.000	0.000
521.00	0.000	0.000
521.50	0.000	0.000
522.00	3.103	3.103
522.50	41.275	41.275
523.00	86.470	86.470
523.50	142.306	142.306
524.00	210.030	210.030

Structure #2 (Pond)

Basin 003

Pond Inputs:

Initial Pool Elev:	502.00 ft
Initial Pool:	6.75 ac-ft
*Sediment Storage:	6.80 ac-ft
Dead Space:	20.00 %

**Sediment capacity was entered by user*

Emergency Spillway

Spillway Elev	Crest Length (ft)	Left Sideslope	Right Sideslope	Bottom Width (ft)
502.00	10.00	2.00:1	2.00:1	38.00

Pond Results:

Peak Elevation:	503.73 ft
H'graph Detention Time:	1.16 hrs
Pond Model:	CSTRS
Dewater Time:	0.70 days
Trap Efficiency:	92.26 %

Dewatering time is calculated from peak stage to lowest spillway

Elevation-Capacity-Discharge Table

Elevation	Area (ac)	Capacity (ac-ft)	Discharge (cfs)	Dewater Time (hrs)	
500.75	5.068	0.000	0.000		Top of Sed. Storage
501.00	5.192	1.300	0.000		
501.50	5.445	3.959	0.000		
502.00	5.703	6.746	0.000		Spillway #1
502.50	5.967	9.663	7.792	4.53*	
503.00	6.237	12.713	99.901	11.00	
503.50	6.513	15.901	204.055	0.95	
503.73	6.642	17.399	259.948	0.40	Peak Stage
504.00	6.795	19.227	328.102		
504.50	7.308	22.752	473.620		
505.00	7.840	26.538	639.521		
505.50	8.390	30.595	825.149		
506.00	8.959	34.931	1,030.099		

**Designates time(s) to dewater have been extrapolated beyond the 50 hour hydrograph limit.*

Detailed Discharge Table

Elevation (ft)	Emergency Spillway (cfs)	Combined Total Discharge (cfs)
500.75	0.000	0.000
501.00	0.000	0.000
501.50	0.000	0.000
502.00	0.000	0.000
502.50	7.792	7.792
503.00	99.901	99.901
503.50	204.055	204.055
504.00	328.102	328.102
504.50	473.620	473.620
505.00	639.521	639.521
505.50	825.149	825.149
506.00	1,030.099	1,030.099

Subwatershed Hydrology Detail:

Stru #	SWS #	SWS Area (ac)	Time of Conc (hrs)	Musk K (hrs)	Musk X	Curve Number	UHS	Peak Discharge (cfs)	Runoff Volume (ac-ft)
#1	1	103.000	0.185	0.000	0.000	81.000	F	125.66	31.883
	2	2.000	0.001	0.000	0.000	100.000	S	3.15	0.999
	Σ	**105.000**						**127.94**	**32.882**
#2	1	105.000	0.350	0.000	0.000	81.000	F	124.02	32.115
	2	77.000	0.194	0.000	0.000	70.000	S	45.19	12.082
	3	6.000	0.001	0.000	0.000	100.000	S	9.44	2.997
	Σ	**293.000**						**292.79**	**80.072**

Subwatershed Sedimentology Detail:

Stru #	SWS #	Soil K	L (ft)	S (%)	C	P	PS #	Sediment (tons)	Peak Sediment Conc. (mg/l)	Peak Settleable Conc (ml/l)	24VW (ml/l)
#1	1	0.240	200.00	8.00	0.9000	1.0000	2	2,997.5	116,653	89.15	51.09
	2	0.001	200.00	0.00	0.0010	1.0000	2	0.0	0	0.00	0.00
	Σ							**2,997.5**	**115,592**	**88.34**	**49.72**
#2	1	0.240	200.00	6.00	0.9000	1.0000	2	2,283.6	89,248	68.15	38.92
	2	0.240	200.00	8.00	0.0030	1.0000	1	4.0	423	0.32	0.18
	3	0.001	200.00	0.00	0.0010	1.0000	1	0.0	0	0.00	0.00
	Σ							**2,413.6**	**41,187**	**30.14**	**16.95**

Subwatershed Time of Concentration Details:

Stru #	SWS #	Land Flow Condition	Slope (%)	Vert. Dist. (ft)	Horiz. Dist. (ft)	Velocity (fps)	Time (hrs)
#2	1	8. Large gullies, diversions, and low flowing streams	5.00	40.00	800.00	6.700	0.033
#2	**1**	**Time of Concentration:**					**0.350**

Shannon LLC
Shannon Mine No. 4
P-3959
Basin 003 & 003A Re-Evaluation
4.8 Inches, 25 Year-6 Hour
Rainfall Event

SEW

General Information

Storm Information:

Storm Type:	Rainfall Event

Accumulated Time (hrs)	Accumulated Depth (in)
0.00	0.0000
0.50	0.1680
1.00	0.3840
1.50	0.6480
2.00	1.1040
2.50	2.8800
3.00	3.3600
3.50	3.7440
4.00	4.0080
4.50	4.2480
5.00	4.4440
5.50	4.6320
6.00	4.8000

Peak 30-minute Intensity: 3.552 in/hr

Particle Size Distribution:

Size (mm)	Topsoil	Spoil
3.0000	100.000%	100.000%
2.0000	96.000%	94.000%
1.0000	89.500%	74.500%
0.5000	82.500%	49.000%
0.3000	77.500%	39.000%
0.2000	71.500%	32.000%
0.1000	63.000%	24.500%
0.0500	41.000%	16.000%
0.0300	37.000%	13.000%
0.0200	11.000%	8.000%
0.0100	2.500%	3.000%
0.0050	2.500%	3.000%
0.0030	2.500%	3.000%

Size (mm)	Topsoil	Spoil
0.0010	2.500%	3.000%
0.0001	0.000%	0.000%

Structure Networking:

Type	Stru #	(flows into)	Stru #	Musk. K (hrs)	Musk. X	Description
Pond	#1	==>	#2	0.000	0.000	Basin 003A
Pond	#2	==>	End	0.000	0.000	Basin 003

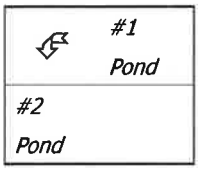

Structure Summary:

		Immediate Contributing Area (ac)	Total Contributing Area (ac)	Peak Discharge (cfs)	Total Runoff Volume (ac-ft)	Sediment (tons)	Peak Sediment Conc. (mg/l)	Peak Settleable Conc. (ml/l)	24VW (ml/l)
#1	In	105.000	105.000	239.76	23.86	3,574.0	169,955	129.59	79.92
	Out			171.98	23.86	180.9	9,556	2.61	1.56
#2	In	188.000	293.000	444.02	57.62	2,725.4	61,447	44.40	25.12
	Out			300.65	57.62	249.1	5,135	0.51	0.32

Particle Size Distribution(s) at Each Structure

Structure #1 (Basin 003A):

Size (mm)	In	Out
3.0000	100.000%	100.000%
2.0000	100.000%	100.000%
1.0000	80.930%	100.000%
0.5000	53.229%	100.000%
0.3000	42.366%	100.000%
0.2000	34.762%	100.000%
0.1000	26.614%	100.000%
0.0500	17.381%	100.000%
0.0300	14.122%	100.000%
0.0200	8.690%	100.000%
0.0100	3.259%	64.394%
0.0050	3.259%	64.394%
0.0030	3.259%	64.394%
0.0010	3.259%	64.394%
0.0001	0.000%	0.000%

Structure #2:

Size (mm)	In	Out
3.0000	100.000%	100.000%
2.0000	100.000%	100.000%
1.0000	89.104%	100.000%
0.5000	60.925%	100.000%
0.3000	49.875%	100.000%
0.2000	42.139%	100.000%
0.1000	33.851%	100.000%
0.0500	24.410%	100.000%
0.0300	21.086%	100.000%
0.0200	15.502%	100.000%
0.0100	7.594%	83.096%
0.0050	7.594%	83.096%
0.0030	7.594%	83.096%
0.0010	7.594%	83.096%

Size (mm)	In	Out
0.0001	0.000%	0.000%

Structure Detail:

Structure #1 (Pond)

Basin 003A

Pond Inputs:

Initial Pool Elev:	521.50 ft
Initial Pool:	4.13 ac-ft
*Sediment Storage:	10.31 ac-ft
Dead Space:	20.00 %

**Sediment capacity was entered by user*

Emergency Spillway

Spillway Elev	Crest Length (ft)	Left Sideslope	Right Sideslope	Bottom Width (ft)
521.50	10.00	2.00:1	2.00:1	15.00

Pond Results:

Peak Elevation:	523.72 ft
H'graph Detention Time:	0.79 hrs
Pond Model:	CSTRS
Dewater Time:	1.39 days
Trap Efficiency:	94.94 %

Dewatering time is calculated from peak stage to lowest spillway

Elevation-Capacity-Discharge Table

Elevation	Area (ac)	Capacity (ac-ft)	Discharge (cfs)	Dewater Time (hrs)	
519.50	1.874	0.000	0.000		Top of Sed. Storage
519.50	1.874	0.000	0.000		
520.00	1.970	0.961	0.000		
520.50	2.064	1.969	0.000		
521.00	2.159	3.025	0.000		
521.50	2.257	4.129	0.000		Spillway #1
522.00	2.358	5.283	3.103	28.90	
522.50	2.460	6.487	41.275	2.35	
523.00	2.564	7.743	86.470	1.45	
523.50	2.671	9.052	142.306	0.45	
523.72	2.719	9.649	171.977	0.15	Peak Stage
524.00	2.780	10.415	210.030		

Detailed Discharge Table

Elevation (ft)	Emergency Spillway (cfs)	Combined Total Discharge (cfs)
519.50	0.000	0.000
519.50	0.000	0.000
520.00	0.000	0.000
520.50	0.000	0.000
521.00	0.000	0.000
521.50	0.000	0.000
522.00	3.103	3.103
522.50	41.275	41.275
523.00	86.470	86.470
523.50	142.306	142.306
524.00	210.030	210.030

Structure #2 (Pond)

Basin 003

Pond Inputs:

Initial Pool Elev:	502.00 ft
Initial Pool:	6.75 ac-ft
*Sediment Storage:	6.80 ac-ft
Dead Space:	20.00 %

**Sediment capacity was entered by user*

Emergency Spillway

Spillway Elev	Crest Length (ft)	Left Sideslope	Right Sideslope	Bottom Width (ft)
502.00	10.00	2.00:1	2.00:1	38.00

Pond Results:

Peak Elevation:	503.89 ft
H'graph Detention Time:	0.93 hrs
Pond Model:	CSTRS
Dewater Time:	1.85 days
Trap Efficiency:	90.86 %

Dewatering time is calculated from peak stage to lowest spillway

Elevation-Capacity-Discharge Table

Elevation	Area (ac)	Capacity (ac-ft)	Discharge (cfs)	Dewater Time (hrs)	
500.75	5.068	0.000	0.000		Top of Sed. Storage
501.00	5.192	1.300	0.000		
501.50	5.445	3.959	0.000		
502.00	5.703	6.746	0.000		Spillway #1
502.50	5.967	9.663	7.792	39.60	
503.00	6.237	12.713	99.901	2.45	
503.50	6.513	15.901	204.055	1.55	
503.89	6.733	18.491	300.650	0.70	Peak Stage
504.00	6.795	19.227	328.102		
504.50	7.308	22.752	473.620		
505.00	7.840	26.538	639.521		
505.50	8.390	30.595	825.149		
506.00	8.959	34.931	1,030.099		

Detailed Discharge Table

Elevation (ft)	Emergency Spillway (cfs)	Combined Total Discharge (cfs)
500.75	0.000	0.000
501.00	0.000	0.000
501.50	0.000	0.000
502.00	0.000	0.000
502.50	7.792	7.792
503.00	99.901	99.901
503.50	204.055	204.055
504.00	328.102	328.102
504.50	473.620	473.620
505.00	639.521	639.521
505.50	825.149	825.149
506.00	1,030.099	1,030.099

Subwatershed Hydrology Detail:

Stru #	SWS #	SWS Area (ac)	Time of Conc (hrs)	Musk K (hrs)	Musk X	Curve Number	UHS	Peak Discharge (cfs)	Runoff Volume (ac-ft)
#1	1	103.000	0.185	0.000	0.000	81.000	F	237.82	23.063
	2	2.000	0.001	0.000	0.000	100.000	S	7.16	0.797
	Σ	**105.000**						**239.76**	**23.860**
#2	1	105.000	0.350	0.000	0.000	81.000	F	207.44	23.230
	2	77.000	0.194	0.000	0.000	70.000	S	62.43	8.137
	3	6.000	0.001	0.000	0.000	100.000	S	21.49	2.392
	Σ	**293.000**						**444.02**	**57.619**

Subwatershed Sedimentology Detail:

Stru #	SWS #	Soil K	L (ft)	S (%)	C	P	PS #	Sediment (tons)	Peak Sediment Conc. (mg/l)	Peak Settleable Conc (ml/l)	24VW (ml/l)
#1	1	0.240	200.00	8.00	0.9000	1.0000	2	3,574.0	171,244	130.57	82.58
	2	0.001	200.00	0.00	0.0010	1.0000	2	0.0	0	0.00	0.00
	Σ							**3,574.0**	**169,955**	**129.59**	**79.92**
#2	1	0.240	200.00	6.00	0.9000	1.0000	2	2,540.7	118,762	90.15	58.91
	2	0.240	200.00	8.00	0.0030	1.0000	1	3.8	530	0.39	0.26
	3	0.001	200.00	0.00	0.0010	1.0000	1	0.0	0	0.00	0.00
	Σ							**2,725.4**	**61,447**	**44.40**	**25.12**

Subwatershed Time of Concentration Details:

Stru #	SWS #	Land Flow Condition	Slope (%)	Vert. Dist. (ft)	Horiz. Dist. (ft)	Velocity (fps)	Time (hrs)
#2	1	8. Large gullies, diversions, and low flowing streams	5.00	40.00	800.00	6.700	0.033
#2	**1**	**Time of Concentration:**					**0.350**

Copyright 1998 -2010 Pamela L Schwab

Shannon LLC

Shannon Mine No. 4

P-3959

Basin 008 & 008A

6.0 Inches, 10 Year-24 Hour

DRN 58

SEW

General Information

Storm Information:

Storm Type:	DRN 58
Design Storm:	10 yr - 24 hr
Rainfall Depth:	6.000 inches

Particle Size Distribution:

Size (mm)	Topsoil	Spoil
3.0000	100.000%	100.000%
2.0000	96.000%	94.000%
1.0000	89.500%	74.500%
0.5000	82.500%	49.000%
0.3000	77.500%	39.000%
0.2000	71.500%	32.000%
0.1000	63.000%	24.500%
0.0500	41.000%	16.000%
0.0300	37.000%	13.000%
0.0200	11.000%	8.000%
0.0100	2.500%	3.000%
0.0050	2.500%	3.000%
0.0030	2.500%	3.000%
0.0010	2.500%	3.000%
0.0001	0.000%	0.000%

Structure Networking:

Type	Stru #	(flows into)	Stru #	Musk. K (hrs)	Musk. X	Description
Pond	#1	==>	#2	0.000	0.000	Basin 008A
Pond	#2	==>	End	0.000	0.000	Basin 008

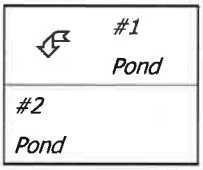

Structure Summary:

		Immediate Contributing Area (ac)	Total Contributing Area (ac)	Peak Discharge (cfs)	Total Runoff Volume (ac-ft)	Sediment (tons)	Peak Sediment Conc. (mg/l)	Peak Settleable Conc. (ml/l)	24VW (ml/l)
#1	In	84.000	84.000	49.30	13.18	4.4	427	0.32	0.18
	Out			42.88	13.18	0.2	24	0.00	0.00
#2	In	14.000	98.000	57.63	17.71	105.2	16,773	12.82	3.33
	Out			54.20	17.71	5.9	796	0.27	0.09

Particle Size Distribution(s) at Each Structure

Structure #1 (Basin 008A):

Size (mm)	In	Out
3.0000	100.000%	100.000%
2.0000	100.000%	100.000%
1.0000	100.000%	100.000%
0.5000	100.000%	100.000%
0.3000	100.000%	100.000%
0.2000	96.931%	100.000%
0.1000	85.408%	100.000%
0.0500	55.583%	100.000%
0.0300	50.160%	100.000%
0.0200	14.912%	100.000%
0.0100	3.389%	81.835%
0.0050	3.389%	81.835%
0.0030	3.389%	81.835%
0.0010	3.389%	81.835%
0.0001	0.000%	0.000%

Structure #2:

Size (mm)	In	Out
3.0000	100.000%	100.000%
2.0000	94.010%	100.000%
1.0000	74.544%	100.000%
0.5000	49.088%	100.000%
0.3000	39.106%	100.000%
0.2000	32.118%	100.000%
0.1000	24.631%	100.000%
0.0500	16.146%	100.000%
0.0300	13.151%	100.000%
0.0200	8.159%	100.000%
0.0100	3.137%	55.567%
0.0050	3.137%	55.567%
0.0030	3.137%	55.567%

Size (mm)	In	Out
0.0010	3.137%	55.567%
0.0001	0.000%	0.000%

Structure Detail:

Structure #1 (Pond)

Basin 008A

Pond Inputs:

Initial Pool Elev:	470.70 ft
Initial Pool:	4.53 ac-ft
*Sediment Storage:	13.52 ac-ft
Dead Space:	20.00 %

**Sediment capacity was entered by user*

Emergency Spillway

Spillway Elev	Crest Length (ft)	Left Sideslope	Right Sideslope	Bottom Width (ft)
470.70	10.00	2.00:1	2.00:1	35.00

Pond Results:

Peak Elevation:	471.24 ft
H'graph Detention Time:	0.33 hrs
Pond Model:	CSTRS
Dewater Time:	0.61 days
Trap Efficiency:	95.86 %

Dewatering time is calculated from peak stage to lowest spillway

Elevation-Capacity-Discharge Table

Elevation	Area (ac)	Capacity (ac-ft)	Discharge (cfs)	Dewater Time (hrs)	
468.50	1.949	0.000	0.000		Top of Sed. Storage
469.00	1.999	0.987	0.000		
469.50	2.049	1.998	0.000		
470.00	2.100	3.036	0.000		
470.50	2.149	4.098	0.000		
470.70	2.169	4.530	0.000		Spillway #1
471.00	2.199	5.185	23.849	13.85	
471.24	2.223	5.717	42.879	0.80	Peak Stage
471.50	2.249	6.297	63.599		
471.90	2.290	7.205	127.806		
472.00	2.300	7.434	147.127		

Detailed Discharge Table

Elevation (ft)	Emergency Spillway (cfs)	Combined Total Discharge (cfs)
468.50	0.000	0.000
469.00	0.000	0.000
469.50	0.000	0.000
470.00	0.000	0.000
470.50	0.000	0.000
470.70	0.000	0.000
471.00	23.849	23.849
471.50	63.599	63.599
471.90	127.806	127.806
472.00	147.127	147.127

Structure #2 (Pond)

Basin 008

Pond Inputs:

Initial Pool Elev:	449.00 ft
Initial Pool:	1.20 ac-ft
*Sediment Storage:	1.40 ac-ft
Dead Space:	20.00 %

**Sediment capacity was entered by user*

Emergency Spillway

Spillway Elev	Crest Length (ft)	Left Sideslope	Right Sideslope	Bottom Width (ft)
449.00	10.00	2.00:1	2.00:1	15.00

Pond Results:

Peak Elevation:	450.14 ft
H'graph Detention Time:	0.45 hrs
Pond Model:	CSTRS
Dewater Time:	0.90 days
Trap Efficiency:	94.36 %

Dewatering time is calculated from peak stage to lowest spillway

Elevation-Capacity-Discharge Table

Elevation	Area (ac)	Capacity (ac-ft)	Discharge (cfs)	Dewater Time (hrs)	
447.00	0.515	0.000	0.000		Top of Sed. Storage
447.00	0.515	0.002	0.000		
447.50	0.557	0.270	0.000		
448.00	0.600	0.559	0.000		
448.50	0.645	0.871	0.000		
449.00	0.692	1.205	0.000		Spillway #1
449.50	0.737	1.562	3.103	9.50	
450.00	0.783	1.942	41.275	11.55	
450.14	0.797	2.057	54.196	0.60	Peak Stage
450.50	0.830	2.345	86.470		
451.00	0.879	2.772	142.306		
451.50	0.928	3.224	210.030		
452.00	0.979	3.701	289.670		
452.50	1.031	4.203	381.384		
453.00	1.085	4.733	485.395		
453.50	1.173	5.297	601.965		
454.00	1.265	5.906	731.377		

Detailed Discharge Table

Elevation (ft)	Emergency Spillway (cfs)	Combined Total Discharge (cfs)
447.00	0.000	0.000
447.00	0.000	0.000
447.50	0.000	0.000
448.00	0.000	0.000
448.50	0.000	0.000
449.00	0.000	0.000
449.50	3.103	3.103
450.00	41.275	41.275
450.50	86.470	86.470
451.00	142.306	142.306
451.50	210.030	210.030
452.00	289.670	289.670
452.50	381.384	381.384
453.00	485.395	485.395
453.50	601.965	601.965
454.00	731.377	731.377

Subwatershed Hydrology Detail:

Stru #	SWS #	SWS Area (ac)	Time of Conc (hrs)	Musk K (hrs)	Musk X	Curve Number	UHS	Peak Discharge (cfs)	Runoff Volume (ac-ft)
#1	1	84.000	0.194	0.000	0.000	70.000	S	49.30	13.181
	Σ	**84.000**						**49.30**	**13.181**
#2	1	14.000	0.033	0.000	0.000	81.000	F	18.18	4.525
	Σ	**98.000**						**57.63**	**17.705**

Subwatershed Sedimentology Detail:

Stru #	SWS #	Soil K	L (ft)	S (%)	C	P	PS #	Sediment (tons)	Peak Sediment Conc. (mg/l)	Peak Settleable Conc (ml/l)	24VW (ml/l)
#1	1	0.240	200.00	8.00	0.0030	1.0000	1	4.4	427	0.32	0.18
	Σ							**4.4**	**427**	**0.32**	**0.18**
#2	1	0.240	20.00	8.00	0.9000	1.0000	2	105.0	29,720	22.75	12.95
	Σ							**105.2**	**16,773**	**12.82**	**3.33**

Subwatershed Time of Concentration Details:

Stru #	SWS #	Land Flow Condition	Slope (%)	Vert. Dist. (ft)	Horiz. Dist. (ft)	Velocity (fps)	Time (hrs)
#2	1	8. Large gullies, diversions, and low flowing streams	5.00	40.00	800.00	6.700	0.033
#2	**1**	**Time of Concentration:**					**0.033**

Copyright 1998 -2010 Pamela J. Schwab

Shannon LLC

Shannon Mine No. 4

P-3959

Basin 008 & 008A

4.8 Inches, 25 Year-6 Hour

SCS 6 Hour

SEW

General Information

Storm Information:

Storm Type:	Rainfall Event

Accumulated Time (hrs)	Accumulated Depth (in)
0.00	0.0000
0.50	0.1680
1.00	0.3840
1.50	0.6480
2.00	1.1040
2.50	2.8800
3.00	3.3600
3.50	3.7440
4.00	4.0080
4.50	4.2480
5.00	4.4400
5.50	4.6320
6.00	4.8000

Peak 30-minute Intensity: 3.552 in/hr

Particle Size Distribution:

Size (mm)	Topsoil	Spoil
3.0000	100.000%	100.000%
2.0000	96.000%	94.000%
1.0000	89.500%	74.500%
0.5000	82.500%	49.000%
0.3000	77.500%	39.000%
0.2000	71.500%	32.000%
0.1000	63.000%	24.500%
0.0500	41.000%	16.000%
0.0300	37.000%	13.000%
0.0200	11.000%	8.000%
0.0100	2.500%	3.000%
0.0050	2.500%	3.000%
0.0030	2.500%	3.000%

Size (mm)	Topsoil	Spoil
0.0010	2.500%	3.000%
0.0001	0.000%	0.000%

Structure Networking:

Type	Stru #	(flows into)	Stru #	Musk. K (hrs)	Musk. X	Description
Pond	#1	==>	#2	0.000	0.000	Basin 008A
Pond	#2	==>	End	0.000	0.000	Basin 008

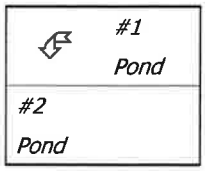

Structure Summary:

		Immediate Contributing Area (ac)	Total Contributing Area (ac)	Peak Discharge (cfs)	Total Runoff Volume (ac-ft)	Sediment (tons)	Peak Sediment Conc. (mg/l)	Peak Settleable Conc. (ml/l)	24VW (ml/l)
#1	In	84.000	84.000	68.10	8.88	4.2	536	0.40	0.26
	Out			45.14	8.88	0.2	35	0.01	0.00
#2	In	14.000	98.000	60.23	12.14	131.6	38,818	29.67	6.04
	Out			54.37	12.14	8.3	1,894	0.71	0.19

Particle Size Distribution(s) at Each Structure

Structure #1 (Basin 008A):

Size (mm)	In	Out
3.0000	100.000%	100.000%
2.0000	100.000%	100.000%
1.0000	100.000%	100.000%
0.5000	100.000%	100.000%
0.3000	100.000%	100.000%
0.2000	100.000%	100.000%
0.1000	100.000%	100.000%
0.0500	65.680%	100.000%
0.0300	59.272%	100.000%
0.0200	17.622%	100.000%
0.0100	4.005%	71.325%
0.0050	4.005%	71.325%
0.0030	4.005%	71.325%
0.0010	4.005%	71.325%
0.0001	0.000%	0.000%

Structure #2:

Size (mm)	In	Out
3.0000	100.000%	100.000%
2.0000	94.011%	100.000%
1.0000	74.546%	100.000%
0.5000	49.092%	100.000%
0.3000	39.110%	100.000%
0.2000	32.123%	100.000%
0.1000	24.636%	100.000%
0.0500	16.151%	100.000%
0.0300	13.157%	100.000%
0.0200	8.166%	100.000%
0.0100	3.123%	49.268%
0.0050	3.123%	49.268%
0.0030	3.123%	49.268%

Size (mm)	In	Out
0.0010	3.123%	49.268%
0.0001	0.000%	0.000%

Structure Detail:

Structure #1 (Pond)

Basin 008A

Pond Inputs:

Initial Pool Elev:	470.70 ft
Initial Pool:	4.53 ac-ft
*Sediment Storage:	13.52 ac-ft
Dead Space:	20.00 %

**Sediment capacity was entered by user*

Emergency Spillway

Spillway Elev	Crest Length (ft)	Left Sideslope	Right Sideslope	Bottom Width (ft)
470.70	10.00	2.00:1	2.00:1	35.00

Pond Results:

Peak Elevation:	471.27 ft
H'graph Detention Time:	0.33 hrs
Pond Model:	CSTRS
Dewater Time:	0.28 days
Trap Efficiency:	94.39 %

Dewatering time is calculated from peak stage to lowest spillway

Elevation-Capacity-Discharge Table

Elevation	Area (ac)	Capacity (ac-ft)	Discharge (cfs)	Dewater Time (hrs)	
468.50	1.949	0.000	0.000		Top of Sed. Storage
468.50	1.949	0.001	0.000		
469.00	1.999	0.988	0.000		
469.50	2.049	1.999	0.000		
470.00	2.100	3.037	0.000		
470.50	2.149	4.099	0.000		
470.70	2.169	4.531	0.000		Spillway #1
471.00	2.199	5.186	23.849	5.35	
471.27	2.226	5.782	45.139	1.45	Peak Stage
471.50	2.249	6.298	63.599		
471.90	2.290	7.206	127.806		
472.00	2.300	7.435	147.127		

Detailed Discharge Table

Elevation (ft)	Emergency Spillway (cfs)	Combined Total Discharge (cfs)
468.50	0.000	0.000
468.50	0.000	0.000
469.00	0.000	0.000
469.50	0.000	0.000
470.00	0.000	0.000
470.50	0.000	0.000
470.70	0.000	0.000
471.00	23.849	23.849
471.50	63.599	63.599
471.90	127.806	127.806
472.00	147.127	147.127

Structure #2 (Pond)

Basin 008

Pond Inputs:

Initial Pool Elev:	449.00 ft
Initial Pool:	1.20 ac-ft
*Sediment Storage:	1.40 ac-ft
Dead Space:	20.00 %

**Sediment capacity was entered by user*

Emergency Spillway

Spillway Elev	Crest Length (ft)	Left Sideslope	Right Sideslope	Bottom Width (ft)
449.00	10.00	2.00:1	2.00:1	15.00

Pond Results:

Peak Elevation:	450.14 ft
H'graph Detention Time:	0.31 hrs
Pond Model:	CSTRS
Dewater Time:	0.57 days
Trap Efficiency:	93.66 %

Dewatering time is calculated from peak stage to lowest spillway

Elevation-Capacity-Discharge Table

Elevation	Area (ac)	Capacity (ac-ft)	Discharge (cfs)	Dewater Time (hrs)	
447.00	0.515	0.000	0.000		Top of Sed. Storage
447.00	0.515	0.002	0.000		
447.50	0.557	0.270	0.000		
448.00	0.600	0.559	0.000		
448.50	0.645	0.871	0.000		
449.00	0.692	1.205	0.000		Spillway #1
449.50	0.737	1.562	3.103	9.50	
450.00	0.783	1.942	41.275	3.60	
450.14	0.797	2.059	54.375	0.60	Peak Stage
450.50	0.830	2.345	86.470		
451.00	0.879	2.772	142.306		
451.50	0.928	3.224	210.030		
452.00	0.979	3.701	289.670		
452.50	1.031	4.203	381.384		
453.00	1.085	4.733	485.395		
453.50	1.173	5.297	601.965		
454.00	1.265	5.906	731.377		

Detailed Discharge Table

Elevation (ft)	Emergency Spillway (cfs)	Combined Total Discharge (cfs)
447.00	0.000	0.000
447.00	0.000	0.000
447.50	0.000	0.000
448.00	0.000	0.000
448.50	0.000	0.000
449.00	0.000	0.000
449.50	3.103	3.103
450.00	41.275	41.275
450.50	86.470	86.470
451.00	142.306	142.306
451.50	210.030	210.030
452.00	289.670	289.670
452.50	381.384	381.384
453.00	485.395	485.395
453.50	601.965	601.965
454.00	731.377	731.377

Subwatershed Hydrology Detail:

Stru #	SWS #	SWS Area (ac)	Time of Conc (hrs)	Musk K (hrs)	Musk X	Curve Number	UHS	Peak Discharge (cfs)	Runoff Volume (ac-ft)
#1	1	84.000	0.194	0.000	0.000	70.000	S	68.10	8.877
	Σ	**84.000**						**68.10**	**8.877**
#2	1	14.000	0.033	0.000	0.000	81.000	F	37.47	3.260
	Σ	**98.000**						**60.23**	**12.138**

Subwatershed Sedimentology Detail:

Stru #	SWS #	Soil K	L (ft)	S (%)	C	P	PS #	Sediment (tons)	Peak Sediment Conc. (mg/l)	Peak Settleable Conc (ml/l)	24VW (ml/l)
#1	1	0.240	200.00	8.00	0.0030	1.0000	1	4.2	536	0.40	0.26
	Σ							**4.2**	**536**	**0.40**	**0.26**
#2	1	0.240	20.00	8.00	0.9000	1.0000	2	131.3	47,368	36.26	22.36
	Σ							**131.6**	**38,818**	**29.67**	**6.04**

Subwatershed Time of Concentration Details:

Stru #	SWS #	Land Flow Condition	Slope (%)	Vert. Dist. (ft)	Horiz. Dist. (ft)	Velocity (fps)	Time (hrs)
#2	1	8. Large gullies, diversions, and low flowing streams	5.00	40.00	800.00	6.700	0.033
#2	**1**	**Time of Concentration:**					**0.033**

Copyright 1998 -2010 Pamela L Schwab

Shannon LLC

Shannon Mine No. 4

P-3959

Basin 009

6.0 Inches, 10 Year-24 Hour

DRN 58

SEW

General Information

Storm Information:

Storm Type:	DRN 58
Design Storm:	10 yr - 24 hr
Rainfall Depth:	6.000 inches

Particle Size Distribution:

Size (mm)	Topsoil	Spoil
3.0000	100.000%	100.000%
2.0000	96.000%	94.000%
1.0000	89.500%	74.500%
0.5000	82.500%	49.000%
0.3000	77.500%	39.000%
0.2000	71.500%	32.000%
0.1000	63.000%	24.500%
0.0500	41.000%	16.000%
0.0300	37.000%	13.000%
0.0200	11.000%	8.000%
0.0100	2.500%	3.000%
0.0050	2.500%	3.000%
0.0030	2.500%	3.000%
0.0010	2.500%	3.000%
0.0001	0.000%	0.000%

Structure Networking:

Type	Stru #	(flows into)	Stru #	Musk. K (hrs)	Musk. X	Description
Pond	#1	==>	End	0.000	0.000	Basin 009

#1
Pond

Structure Summary:

		Immediate Contributing Area (ac)	Total Contributing Area (ac)	Peak Discharge (cfs)	Total Runoff Volume (ac-ft)	Sediment (tons)	Peak Sediment Conc. (mg/l)	Peak Settleable Conc. (ml/l)	24VW (ml/l)
#1	In	69.000	69.000	83.96	21.55	9,152.5	458,682	350.55	207.58
	Out			81.51	19.60	220.3	20,019	0.00	0.00

Particle Size Distribution(s) at Each Structure

Structure #1:

Size (mm)	In	Out
3.0000	100.000%	100.000%
2.0000	97.332%	100.000%
1.0000	77.141%	100.000%
0.5000	50.737%	100.000%
0.3000	40.382%	100.000%
0.2000	33.134%	100.000%
0.1000	25.368%	100.000%
0.0500	16.567%	100.000%
0.0300	13.461%	100.000%
0.0200	8.284%	100.000%
0.0100	3.106%	100.000%
0.0050	3.106%	100.000%
0.0030	3.106%	100.000%
0.0010	3.106%	100.000%
0.0001	0.000%	0.000%

Structure Detail:

Structure #1 (Pond)

Basin 009

Pond Inputs:

Initial Pool Elev:	447.00 ft
Initial Pool:	4.80 ac-ft
*Sediment Storage:	5.69 ac-ft
Dead Space:	20.00 %

**Sediment capacity was entered by user*

Emergency Spillway

Spillway Elev	Crest Length (ft)	Left Sideslope	Right Sideslope	Bottom Width (ft)
449.00	1.00	2.00:1	2.00:1	20.00

Fixed Siphon

Crest Elev	Inlet Elev	Outlet Elev	Diameter (in)	Length (ft)	Manning's n
448.50	447.00	440.00	3.00	100.00	0.0140

Pond Results:

Peak Elevation:	450.14 ft
H'graph Detention Time:	2.17 hrs
Pond Model:	CSTRS
Dewater Time:	3.93 days
Trap Efficiency:	97.59 %

Dewatering time is calculated from peak stage to lowest spillway

Elevation-Capacity-Discharge Table

Elevation	Area (ac)	Capacity (ac-ft)	Discharge (cfs)	Dewater Time (hrs)	
443.00	1.046	0.000	0.000		Top of Sed. Storage
443.00	1.046	0.000	0.000		
443.50	1.093	0.535	0.000		
444.00	1.140	1.093	0.000		
444.50	1.171	1.671	0.000		
445.00	1.203	2.264	0.000		

Elevation	Area (ac)	Capacity (ac-ft)	Discharge (cfs)	Dewater Time (hrs)	
445.50	1.234	2.873	0.000		
446.00	1.267	3.499	0.000		
446.50	1.299	4.140	0.000		
447.00	1.333	4.798	0.000		
447.40	1.359	5.337	0.399	16.35*	
447.50	1.366	5.473	0.401	4.11*	
447.60	1.373	5.610	0.404	4.10*	
448.00	1.400	6.164	0.416	16.13*	
448.50	1.457	6.879	0.430	20.09*	Spillway #2
449.00	1.516	7.622	0.444	20.55	Spillway #1
449.50	1.575	8.395	20.745	11.40	
450.00	1.636	9.197	65.174	1.35	
450.14	1.654	9.428	81.512	0.15	Peak Stage
450.50	1.698	10.031	124.165		
451.00	1.761	10.895	197.356		
451.20	1.786	11.250	230.538		
451.30	1.799	11.429	247.956		
451.50	1.825	11.792	284.441		
452.00	1.890	12.720	385.248		
452.50	1.949	13.680	499.777		
453.00	2.010	14.670	628.129		
453.50	2.071	15.690	770.462		
454.00	2.133	16.741	926.975		
454.50	2.196	17.823	1,097.889		
455.00	2.260	18.936	1,283.443		
455.50	2.324	20.082	1,483.888		
456.00	2.390	21.261	1,699.479		

**Designates time(s) to dewater have been extrapolated beyond the 50 hour hydrograph limit.*

Detailed Discharge Table

Elevation (ft)	Emergency Spillway (cfs)	Fixed Siphon (cfs)	Combined Total Discharge (cfs)
443.00	0.000	0.000	0.000
443.00	0.000	0.000	0.000
443.50	0.000	0.000	0.000
444.00	0.000	0.000	0.000
444.50	0.000	0.000	0.000
445.00	0.000	0.000	0.000

Elevation (ft)	Emergency Spillway (cfs)	Fixed Siphon (cfs)	Combined Total Discharge (cfs)
445.50	0.000	0.000	0.000
446.00	0.000	0.000	0.000
446.50	0.000	0.000	0.000
447.00	0.000	0.000	0.000
447.40	0.000	0.399*	0.399
447.50	0.000	0.401*	0.401
447.60	0.000	0.404*	0.404
448.00	0.000	0.416*	0.416
448.50	0.000	0.430*	0.430
449.00	0.000	0.444	0.444
449.50	20.287	0.458	20.745
450.00	64.704	0.471	65.174
450.50	123.681	0.484	124.165
451.00	196.860	0.496	197.356
451.20	230.037	0.501	230.538
451.30	247.452	0.504	247.956
451.50	283.933	0.508	284.441
452.00	384.727	0.521	385.248
452.50	499.245	0.532	499.777
453.00	627.585	0.544	628.129
453.50	769.907	0.555	770.462
454.00	926.408	0.566	926.975
454.50	1,097.312	0.577	1,097.889
455.00	1,282.856	0.588	1,283.443
455.50	1,483.290	0.598	1,483.888
456.00	1,698.871	0.608	1,699.479

Subwatershed Hydrology Detail:

Stru #	SWS #	SWS Area (ac)	Time of Conc (hrs)	Musk K (hrs)	Musk X	Curve Number	UHS	Peak Discharge (cfs)	Runoff Volume (ac-ft)
#1	1	68.000	0.185	0.000	0.000	81.000	F	82.96	21.049
	2	1.000	0.000	0.000	0.000	100.000	S	1.57	0.499
	Σ	**69.000**						**83.96**	**21.548**

Subwatershed Sedimentology Detail:

Stru #	SWS #	Soil K	L (ft)	S (%)	C	P	PS #	Sediment (tons)	Peak Sediment Conc. (mg/l)	Peak Settleable Conc (ml/l)	24VW (ml/l)
#1	1	0.240	200.00	25.00	0.9000	1.0000	2	9,152.5	461,409	352.63	211.58
	2	0.000	200.00	0.00	0.0010	1.0000	2	0.0	0	0.00	0.00
	Σ							**9,152.5**	**458,682**	**350.55**	**207.58**

Subwatershed Time of Concentration Details:

Stru #	SWS #	Land Flow Condition	Slope (%)	Vert. Dist. (ft)	Horiz. Dist. (ft)	Velocity (fps)	Time (hrs)
#1	1	5. Nearly bare and untilled, and alluvial valley fans	26.67	80.00	300.00	5.160	0.016
		8. Large gullies, diversions, and low flowing streams	7.20	180.00	2,500.00	8.040	0.086
#1	**1**	**Time of Concentration:**					**0.185**

Copyright 1998 -2010 Pamela L Schwab

Shannon LLC

Shannon Mine No. 4

P-3959

Basin 009

4.8 Inches, 25 Year-6 Hour

SCS 6 Hour

SEW

General Information

Storm Information:

Storm Type:	Rainfall Event

Accumulated Time (hrs)	Accumulated Depth (in)
0.00	0.0000
0.50	0.1680
1.00	0.3840
1.50	0.6480
2.00	1.1040
2.50	2.8800
3.00	3.3600
3.50	3.7440
4.00	4.0080
4.50	4.2480
5.00	4.4440
5.50	4.6320
6.00	4.8000

Peak 30-minute Intensity: 3.552 in/hr

Particle Size Distribution:

Size (mm)	Topsoil	Spoil
3.0000	100.000%	100.000%
2.0000	96.000%	94.000%
1.0000	89.500%	74.500%
0.5000	82.500%	49.000%
0.3000	77.500%	39.000%
0.2000	71.500%	32.000%
0.1000	63.000%	24.500%
0.0500	41.000%	16.000%
0.0300	37.000%	13.000%
0.0200	11.000%	8.000%
0.0100	2.500%	3.000%
0.0050	2.500%	3.000%
0.0030	2.500%	3.000%

Size (mm)	Topsoil	Spoil
0.0010	2.500%	3.000%
0.0001	0.000%	0.000%

Structure Networking:

Type	Stru #	(flows into)	Stru #	Musk. K (hrs)	Musk. X	Description
Pond	#1	==>	End	0.000	0.000	Basin 009

#1
Pond

Structure Summary:

		Immediate Contributing Area (ac)	Total Contributing Area (ac)	Peak Discharge (cfs)	Total Runoff Volume (ac-ft)	Sediment (tons)	Peak Sediment Conc. (mg/l)	Peak Settleable Conc. (ml/l)	24VW (ml/l)
#1	In	69.000	69.000	157.98	15.62	10,912.6	631,452	481.48	318.64
	Out			104.49	14.29	231.9	26,300	0.00	0.00

Particle Size Distribution(s) at Each Structure

Structure #1:

Size (mm)	In	Out
3.0000	100.000%	100.000%
2.0000	100.000%	100.000%
1.0000	80.930%	100.000%
0.5000	53.229%	100.000%
0.3000	42.366%	100.000%
0.2000	34.762%	100.000%
0.1000	26.614%	100.000%
0.0500	17.381%	100.000%
0.0300	14.122%	100.000%
0.0200	8.690%	100.000%
0.0100	3.259%	100.000%
0.0050	3.259%	100.000%
0.0030	3.259%	100.000%
0.0010	3.259%	100.000%
0.0001	0.000%	0.000%

Structure Detail:

Structure #1 (Pond)

Basin 009

Pond Inputs:

Initial Pool Elev:	447.00 ft
Initial Pool:	4.80 ac-ft
*Sediment Storage:	5.69 ac-ft
Dead Space:	20.00 %

**Sediment capacity was entered by user*

Emergency Spillway

Spillway Elev	Crest Length (ft)	Left Sideslope	Right Sideslope	Bottom Width (ft)
449.00	1.00	2.00:1	2.00:1	20.00

Fixed Siphon

Crest Elev	Inlet Elev	Outlet Elev	Diameter (in)	Length (ft)	Manning's n
448.50	447.00	440.00	3.00	100.00	0.0140

Pond Results:

Peak Elevation:	450.33 ft
H'graph Detention Time:	3.20 hrs
Pond Model:	CSTRS
Dewater Time:	3.61 days
Trap Efficiency:	97.88 %

Dewatering time is calculated from peak stage to lowest spillway

Elevation-Capacity-Discharge Table

Elevation	Area (ac)	Capacity (ac-ft)	Discharge (cfs)	Dewater Time (hrs)	
443.00	1.046	0.000	0.000		Top of Sed. Storage
443.00	1.046	0.000	0.000		
443.50	1.093	0.535	0.000		
444.00	1.140	1.093	0.000		
444.50	1.171	1.671	0.000		
445.00	1.203	2.264	0.000		

Elevation	Area (ac)	Capacity (ac-ft)	Discharge (cfs)	Dewater Time (hrs)	
445.50	1.234	2.873	0.000		
446.00	1.267	3.499	0.000		
446.50	1.299	4.140	0.000		
447.00	1.333	4.798	0.000		
447.40	1.359	5.337	0.399	16.35*	
447.50	1.366	5.473	0.401	4.11*	
447.60	1.373	5.610	0.404	4.10*	
448.00	1.400	6.164	0.416	16.13*	
448.50	1.457	6.879	0.430	20.09*	Spillway #2
449.00	1.516	7.622	0.444	20.60	Spillway #1
449.50	1.575	8.395	20.745	2.10	
450.00	1.636	9.197	65.174	2.85	
450.33	1.677	9.753	104.495	0.30	Peak Stage
450.50	1.698	10.031	124.165		
451.00	1.761	10.895	197.356		
451.20	1.786	11.250	230.538		
451.30	1.799	11.429	247.956		
451.50	1.825	11.792	284.441		
452.00	1.890	12.720	385.248		
452.50	1.949	13.680	499.777		
453.00	2.010	14.670	628.129		
453.50	2.071	15.690	770.462		
454.00	2.133	16.741	926.975		
454.50	2.196	17.823	1,097.889		
455.00	2.260	18.936	1,283.443		
455.50	2.324	20.082	1,483.888		
456.00	2.390	21.261	1,699.479		

**Designates time(s) to dewater have been extrapolated beyond the 50 hour hydrograph limit.*

Detailed Discharge Table

Elevation (ft)	Emergency Spillway (cfs)	Fixed Siphon (cfs)	Combined Total Discharge (cfs)
443.00	0.000	0.000	0.000
443.00	0.000	0.000	0.000
443.50	0.000	0.000	0.000
444.00	0.000	0.000	0.000
444.50	0.000	0.000	0.000
445.00	0.000	0.000	0.000

Elevation (ft)	Emergency Spillway (cfs)	Fixed Siphon (cfs)	Combined Total Discharge (cfs)
445.50	0.000	0.000	0.000
446.00	0.000	0.000	0.000
446.50	0.000	0.000	0.000
447.00	0.000	0.000	0.000
447.40	0.000	0.399*	0.399
447.50	0.000	0.401*	0.401
447.60	0.000	0.404*	0.404
448.00	0.000	0.416*	0.416
448.50	0.000	0.430*	0.430
449.00	0.000	0.444	0.444
449.50	20.287	0.458	20.745
450.00	64.704	0.471	65.174
450.50	123.681	0.484	124.165
451.00	196.860	0.496	197.356
451.20	230.037	0.501	230.538
451.30	247.452	0.504	247.956
451.50	283.933	0.508	284.441
452.00	384.727	0.521	385.248
452.50	499.245	0.532	499.777
453.00	627.585	0.544	628.129
453.50	769.907	0.555	770.462
454.00	926.408	0.566	926.975
454.50	1,097.312	0.577	1,097.889
455.00	1,282.856	0.588	1,283.443
455.50	1,483.290	0.598	1,483.888
456.00	1,698.871	0.608	1,699.479

Subwatershed Hydrology Detail:

Stru #	SWS #	SWS Area (ac)	Time of Conc (hrs)	Musk K (hrs)	Musk X	Curve Number	UHS	Peak Discharge (cfs)	Runoff Volume (ac-ft)
#1	1	68.000	0.185	0.000	0.000	81.000	F	157.01	15.226
	2	1.000	0.000	0.000	0.000	100.000	S	3.58	0.399
	Σ	**69.000**						**157.98**	**15.624**

Subwatershed Sedimentology Detail:

Stru #	SWS #	Soil K	L (ft)	S (%)	C	P	PS #	Sediment (tons)	Peak Sediment Conc. (mg/l)	Peak Settleable Conc (ml/l)	24VW (ml/l)
#1	1	0.240	200.00	25.00	0.9000	1.0000	2	10,912.6	634,356	483.70	324.92
	2	0.000	200.00	0.00	0.0010	1.0000	2	0.0	0	0.00	0.00
	Σ							**10,912.6**	**631,452**	**481.48**	**318.64**

Subwatershed Time of Concentration Details:

Stru #	SWS #	Land Flow Condition	Slope (%)	Vert. Dist. (ft)	Horiz. Dist. (ft)	Velocity (fps)	Time (hrs)
#1	1	5. Nearly bare and untilled, and alluvial valley fans	26.67	80.00	300.00	5.160	0.016
		8. Large gullies, diversions, and low flowing streams	7.20	180.00	2,500.00	8.040	0.086
#1	**1**	**Time of Concentration:**					**0.185**

Shannon, LLC
Shannon Mine No. 4
P-3959
Soil Classification

Shannon, LLC
Shannon Mine No. 4
P-3959

STABILITY ANALYSIS DATA

METHODOLOGY

The static and dynamic loading stability analyses were performed using the Simplified Bishop Method. The computer program used was the REAME Slope Stability Program as developed by Dr. Yang H. Haung, P.E. of the University of Kentucky.

SOIL CLASSIFICATION UNITS

The soil type (soil classification) to be used in the construction of the embankment structure of Basins 002 and 002B (SM), Basins 003, 003A, 008, 008A, and 009 (ML) and the soil type (soil classification) of the material between the proposed embankment and stiff base of Basins 002 and 002B (ML), Basins 003 and 003A (CL-ML), Basins 008 and 008A (CL), and Basin 009 (SC-SM) were sampled and analyzed by PERC Engineering Co., Inc. The soil properties used in the stability analysis (SM) were taken from the U.S. Department of the Interior Bureau of Reclamation Design of Small Dams.*

SOIL PROPERTIES

	UNIFIED CLASS (PSF)	COHESION	ANGLE OF INT. FRC.	DESIGN DENSITY (PCF)
Basins 002 and 002B Dam Material	SM	270.0	33.02	132.14
Basins 002 and 002B Foundation	ML	100.8	30.54	123.04
Basins 003 and 003A Dam Material	ML	100.8	30.54	123.04
Basins 003 and 003A Foundation	CL-ML	230.4	26.56	128.18
Basins 008 and 008A Dam Material	ML	100.8	30.54	123.04
Basins 008 and 008A Foundation	CL	230.4	26.56	128.18
Basin 009 Dam Material	ML	100.8	30.54	123.04
Basin 009 Foundation	SC-SM	180.0	30.54	135.96

*United States Department of Interior Bureau of Reclamation Design of Small Dams Second Edition 1973, Revised Reprint 1974 page 137 and United States Department of Interior Bureau of Reclamation Design of Small Dams Third Edition 1987 page 96 and 97.

STABILITY ANALYSIS DATA

(Continued)

DESIGN DATA

1) Design Density = 95% of the standard proctor maximum density.
2) Embankment top width: 12.0'.
3) Freeboard minimum = 10% of structure (from top of embankment to normal pool level).
4) Safety factors for embankments with 2.5H:1V slopes, front and back.
5) Basin 002 design height = 15.7 ft.
6) Basin 002B design height = 17.7 ft.
7) Basin 003 design height = 6.9 ft.
8) Basin 003A design height = 17.7 ft.
9) Basin 008 design height = 17.3 ft.
10) Basin 008A design height = 11.1 ft.
11) Basin 009 design height = 19.3 ft.
12) DMIN = 0.00
13) All design heights are measured from the top of the embankment to the toe of the upstream slope.

SAFETY FACTORS

BASIN NUMBER	STATIC SAFETY FACTOR
002	2.9
002B	2.2
003	2.2
003A	1.6
008	2.0
008A	1.6
009	1.5

FOUNDATIONS AND ABUTMENTS

The foundation and abutments area will be inspected for visible structural deficiencies after clearing and grubbing, and if found they will be treated using sound engineering practices.

LIQUID AND PLASTIC LIMITS TEST REPORT

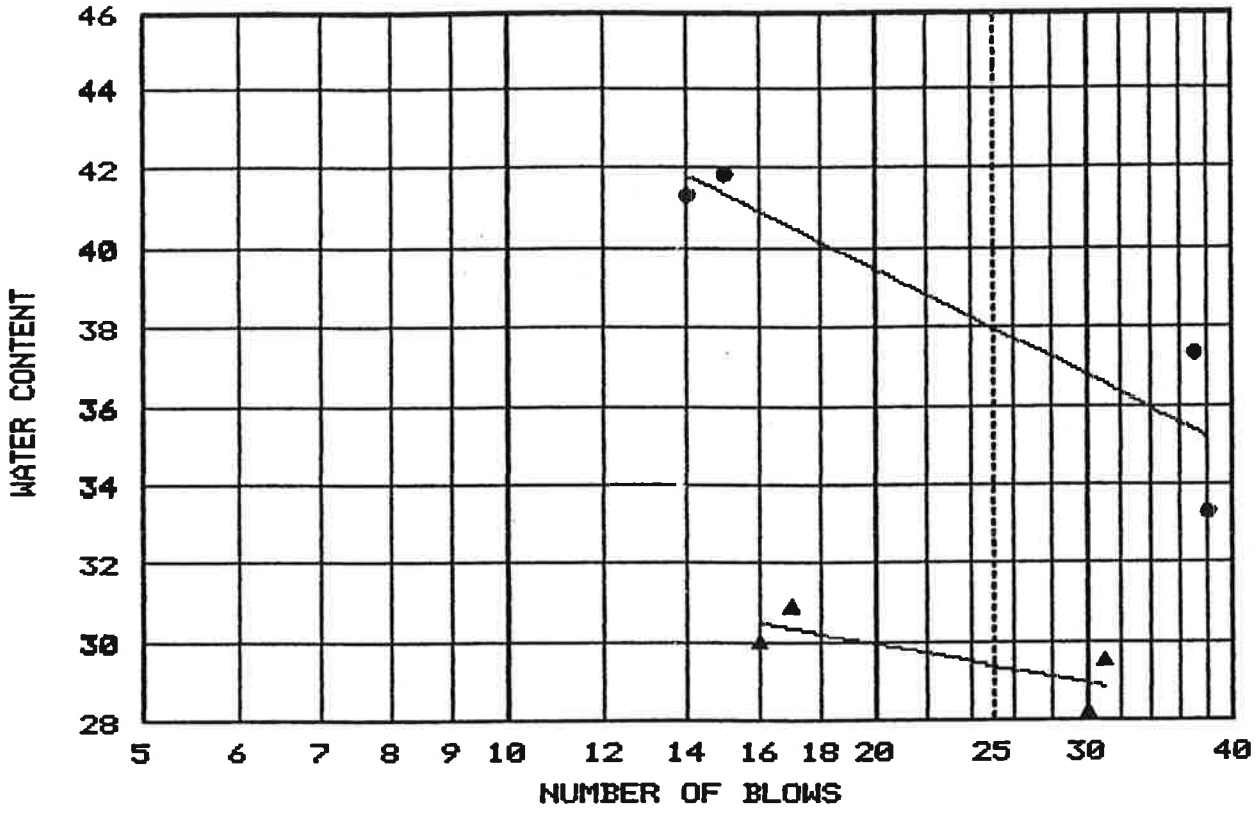

	Location + Description	LL	PL	PI	-200	ASTM D 2487-90
●	BASIN 002 DAM MATERIAL	38.0	27.8	10.2	38.41	SM, Silty sand with gravel
▲	BASIN 002 FOUNDATION MATERIAL	29.4	23.4	6	62.55	ML, Sandy silt with gravel

Project No.:
Project: BASIN 002

Client: ALABAMA LAND & MINERAL
Location: AREA 6

Date: 12-14-92

Remarks:
DAM & FOUNDATION
MATERIAL

LIQUID AND PLASTIC LIMITS TEST REPORT
PERC ENGINEERING CO., INC.

Fig. No._____

PROCTOR TEST REPORT

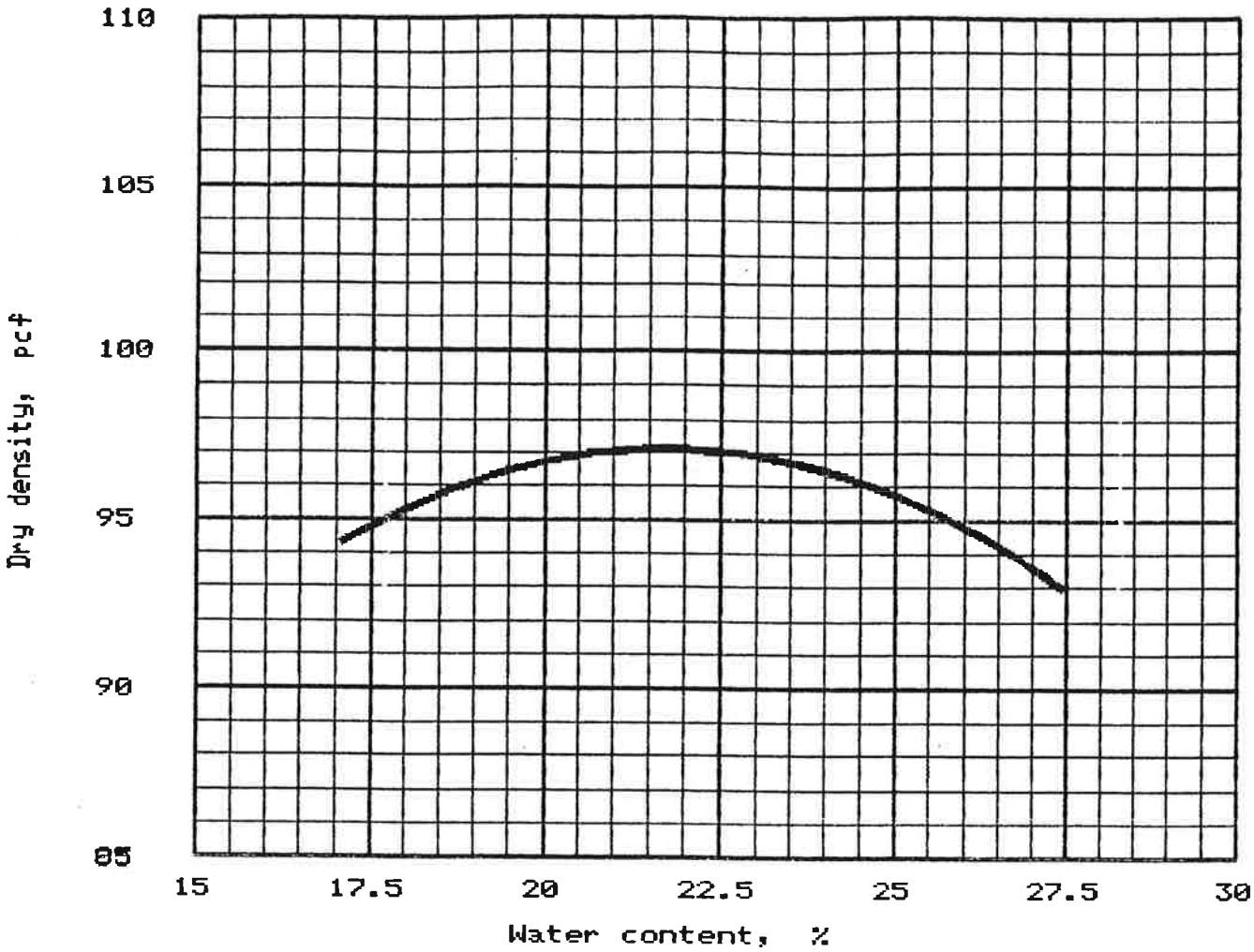

"Standard" Proctor, ASTM D 698, Method C

Elev/ Depth	Classification		Nat. Moist.	Sp.G.	LL	PI	% > 3/4 in	% < No. 20
	USCS	AASHTO						

TEST RESULTS	MATERIAL DESCRIPTION
Optimum moisture = 21.8 % Maximum dry density = 97.1 pcf	DARK BROWN SANDY SILT

Project No.: 219

Project: ALABAMA LAND AND MINERAL

Location: AREA 6

Date: 12-9-92

Remarks:

BASIN 002

DAM MATERIAL

PROCTOR TEST REPORT

PERC ENGINEERING CO., INC.

Figure No.

LIQUID AND PLASTIC LIMITS TEST REPORT

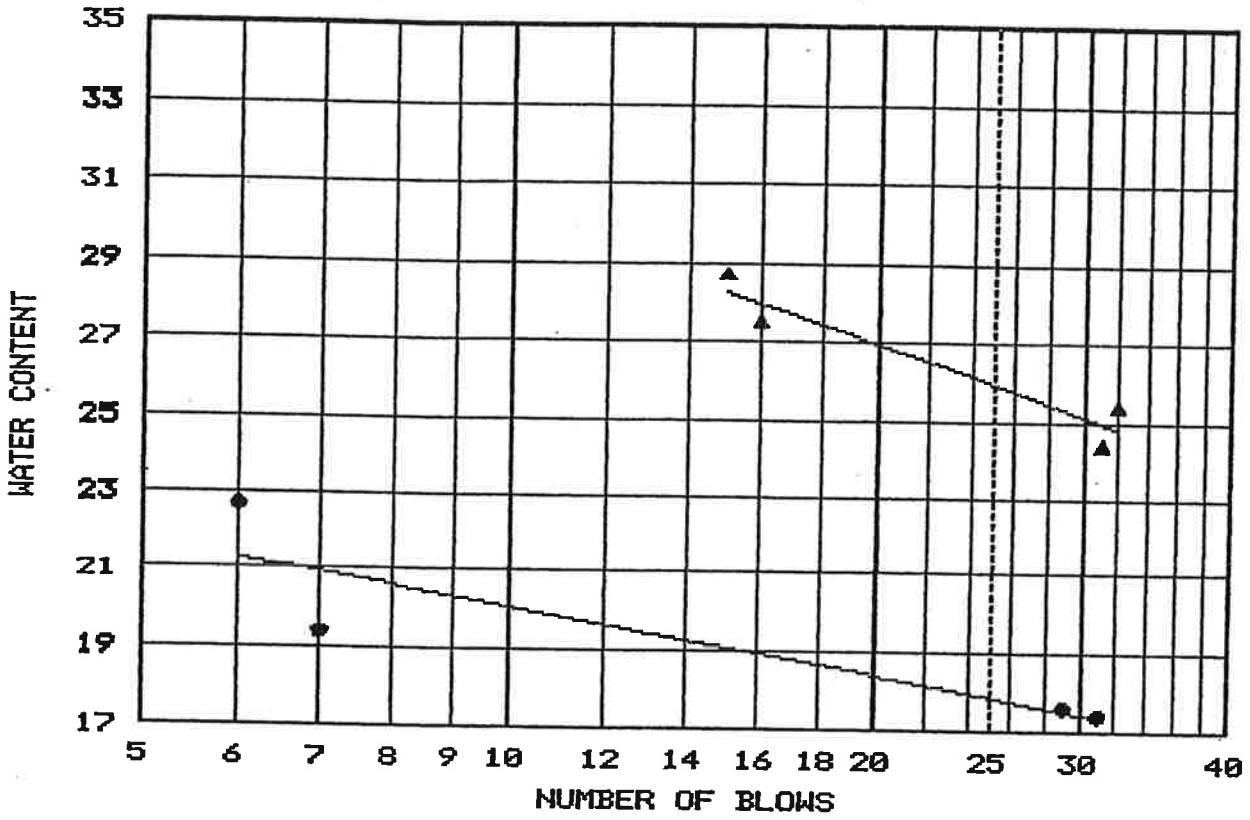

	Location + Description	LL	PL	PI	-200	ASTM D 2487-90
●	BASIN 003 DAM MATERIAL	17.9	16.2	1.7	70.47	ML, Silt with sand
▲	BASIN 003 FOUNDATION MATERIAL	25.9	20.2	5.7	82.94	CL-ML, Silty clay with sand

Project No.:
Project: BASIN 003

Client: ALABAMA LAND & MINERAL
Location: AREA 6

Date: 12-14-92

Remarks:
DAM & FOUNDATION
MATERIAL

TAKEN FROM
P-3699
ASMC PERMIT FILE

LIQUID AND PLASTIC LIMITS TEST REPORT
PERC ENGINEERING CO., INC.

Fig. No.

PROCTOR TEST REPORT

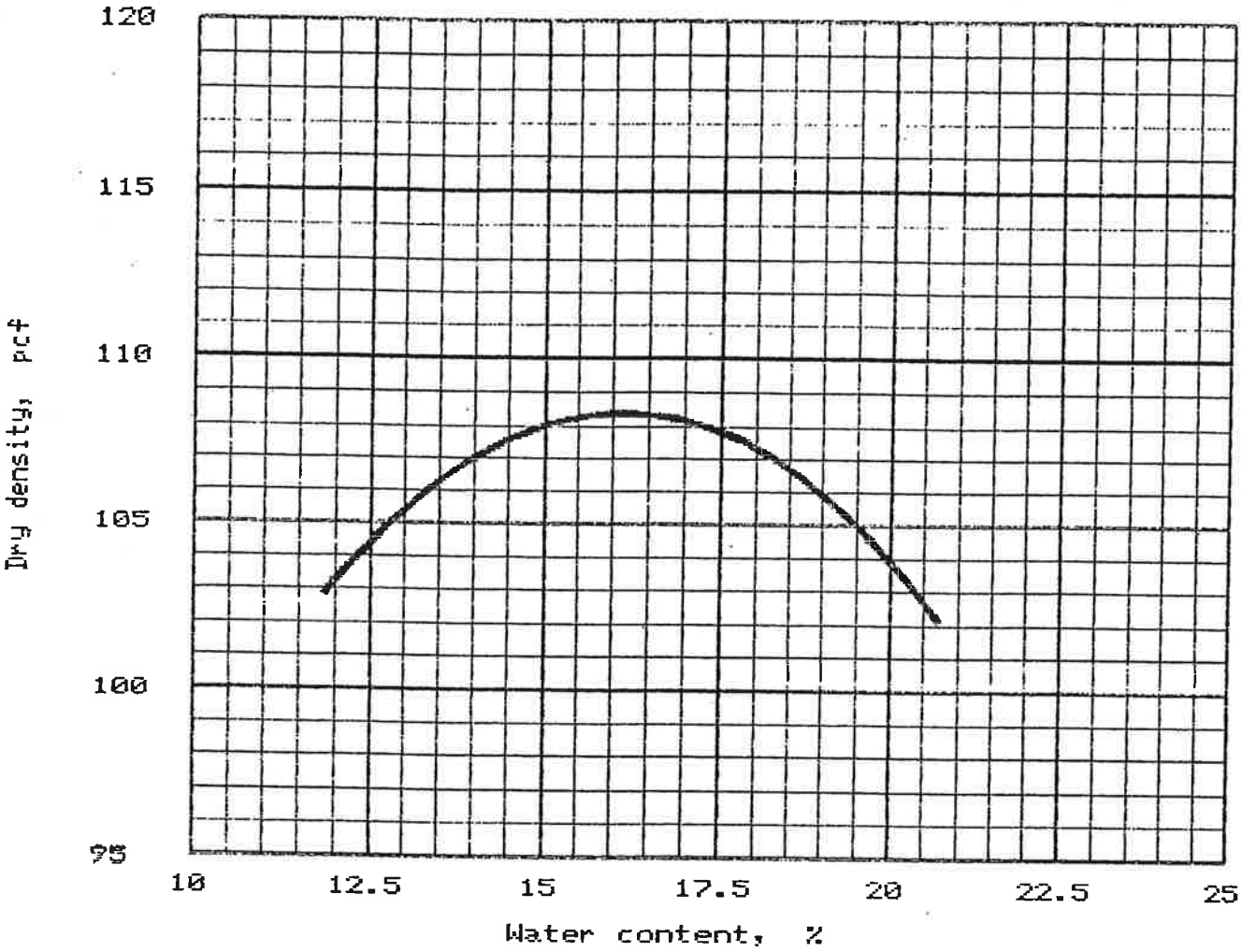

"Standard" Proctor, ASTM D 698, Method A

Elev/ Depth	Classification USCS	Classification AASHTO	Nat. Moist.	Sp.G.	LL	PI	% > No. 4	% < No. 20

TEST RESULTS	MATERIAL DESCRIPTION
Optimum moisture = 16.1 % Maximum dry density = 108.4 pcf	DARK BROWN SILTY SAND

Project No.: Project: ALABAMA LAND & MINERAL Location: AREA 6 Date: 12-14-1992	Remarks: BASIN 003 DAM MATERIAL
PROCTOR TEST REPORT PERC ENGINEERING CO., INC.	Figure No.

TAKEN FROM
P 3699
ASMC PERMIT FILE

PROCTOR TEST REPORT

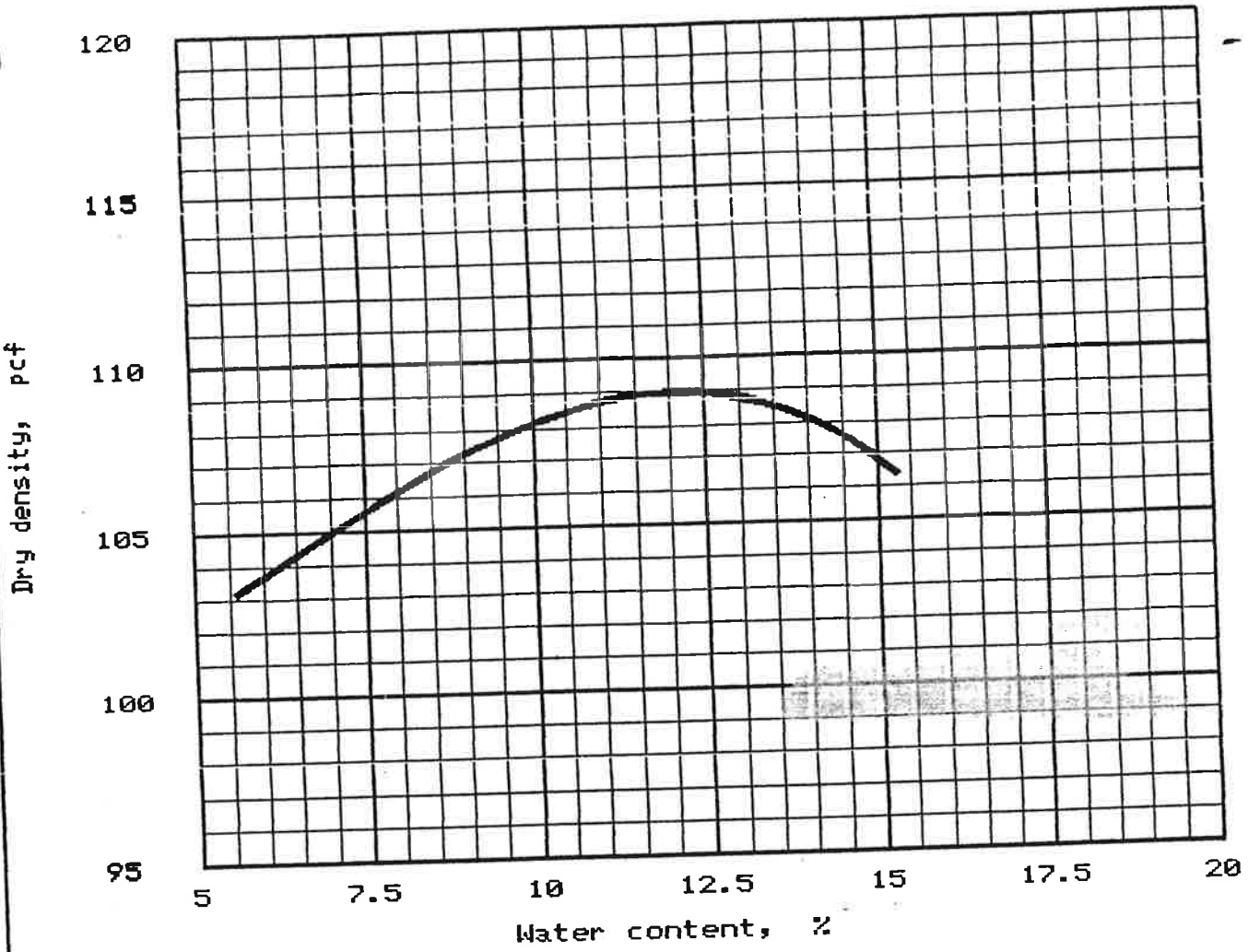

"Standard" Proctor, ASTM D 698, Method C

Elev/ Depth	Classification		Nat. Moist.	Sp.G.	LL	PI	% > 3/4 in	% < No. 20
	USCS	AASHTO						

TEST RESULTS	MATERIAL DESCRIPTION
Optimum moisture = 12.1 % Maximum dry density = 109.0 pcf	LIGHT BROWN CLAY WITH LITE SILT

Project No.: #214

Project: ALABAMA LAND&MINERAL

Location: AERA #6

JEFFERSON COUNTY,AL

Date: 10-14-1992

Remarks:

DAM MATERIAL

BASIN 008&009

PROCTOR TEST REPORT

PERC ENGINEERING CO., INC.

Figure No._____

LIQUID AND PLASTIC LIMITS TEST REPORT

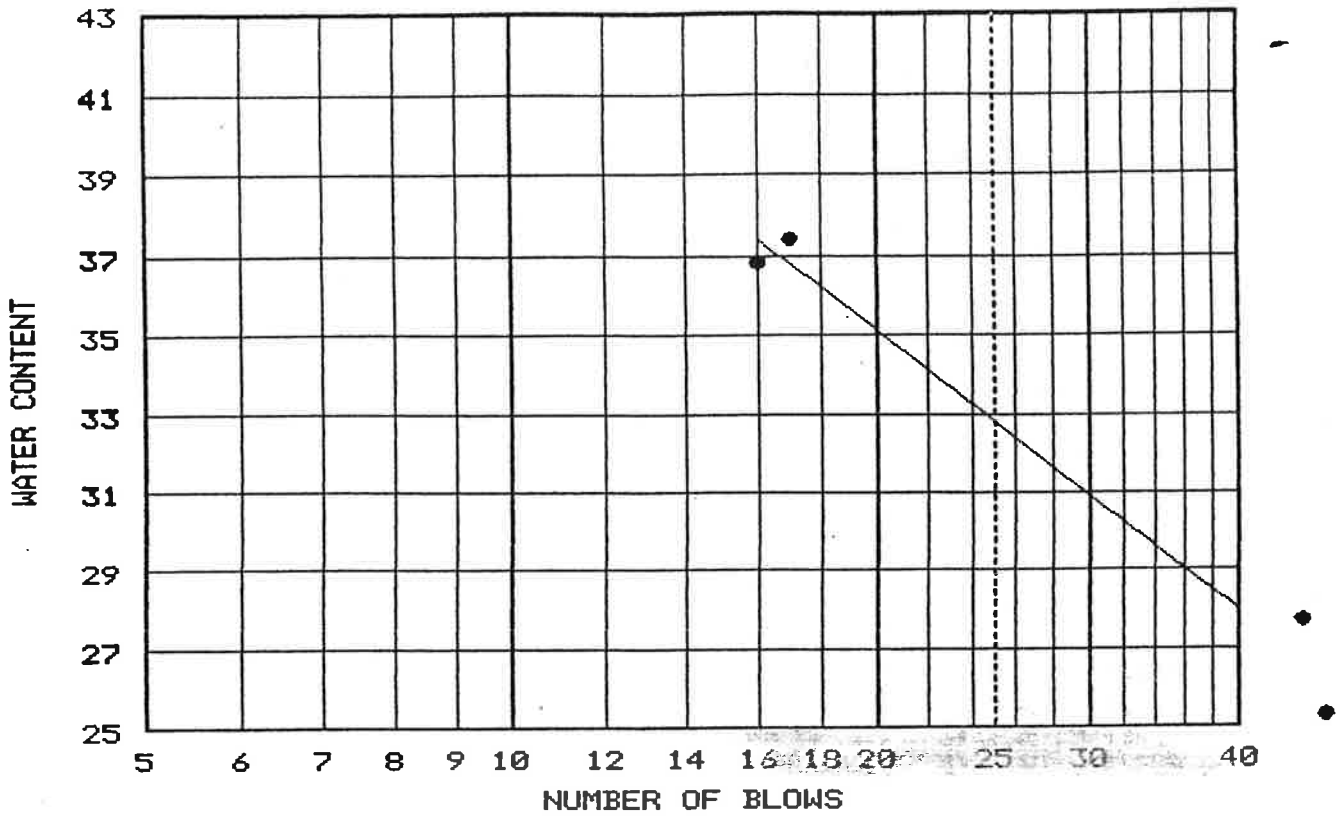

Location + Description	LL	PL	PI	-200	ASTM D 2487-90
●	32.8	25.0	7.8	63.42	ML, Sandy silt

Project No.: 214
Project: AERA#6
BASIN 008&009
Client: ALABAMA LAND & MINERAL
Location: DAM MATERIAL

Date: 10-13-92

Remarks:

LIQUID AND PLASTIC LIMITS TEST REPORT
PERC ENGINEERING CO., INC.

Fig. No.

LIQUID AND PLASTIC LIMITS TEST REPORT

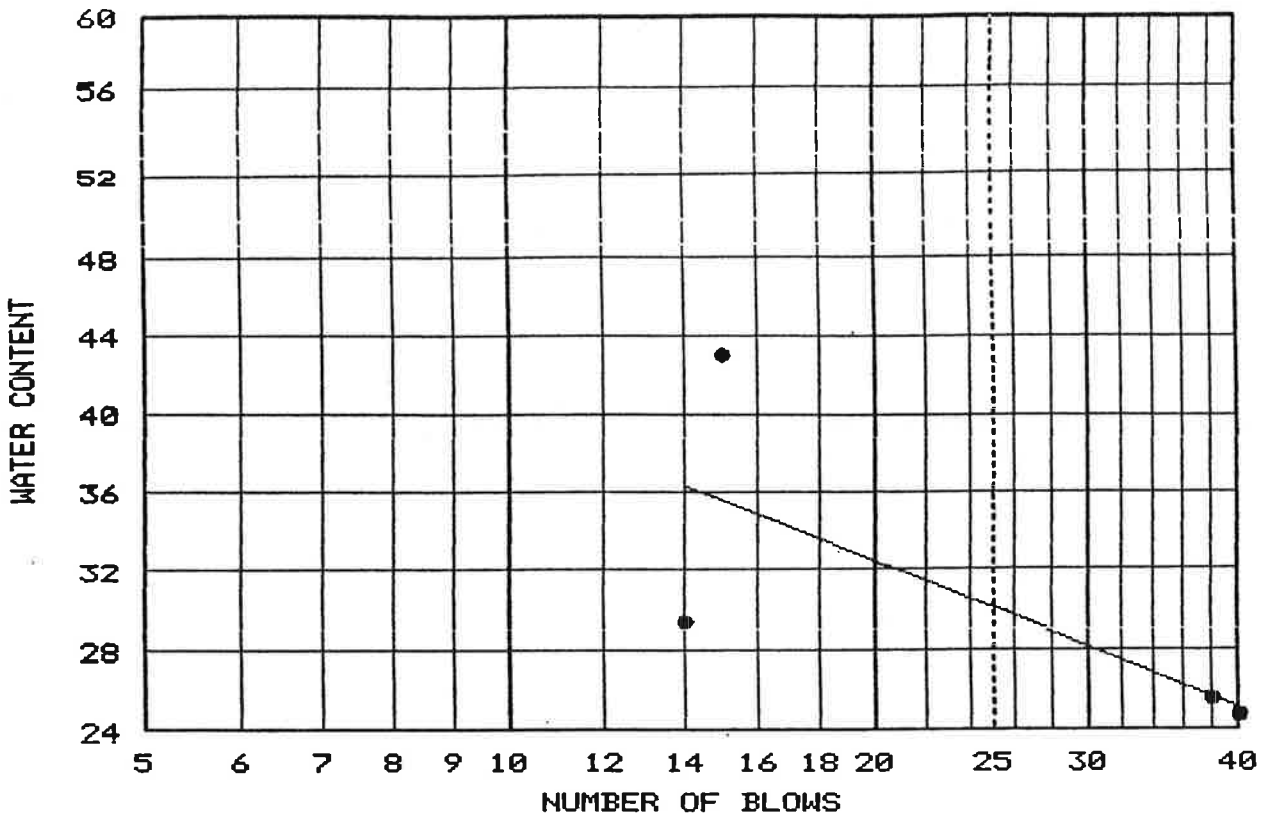

Location + Description	LL	PL	PI	-200	ASTM D 2487-90
●	30.1	20.7	9.4	60.67	CL, Sandy lean clay

Project No.:
Project: Basin 008 Foundation Material

Client: Alabama Land and Mineral
Location: Area No. 6

Date: 10-12-92

Remarks:

LIQUID AND PLASTIC LIMITS TEST REPORT

PERC ENGINEERING CO., INC.

Fig. No._____

LIQUID AND PLASTIC LIMITS TEST REPORT

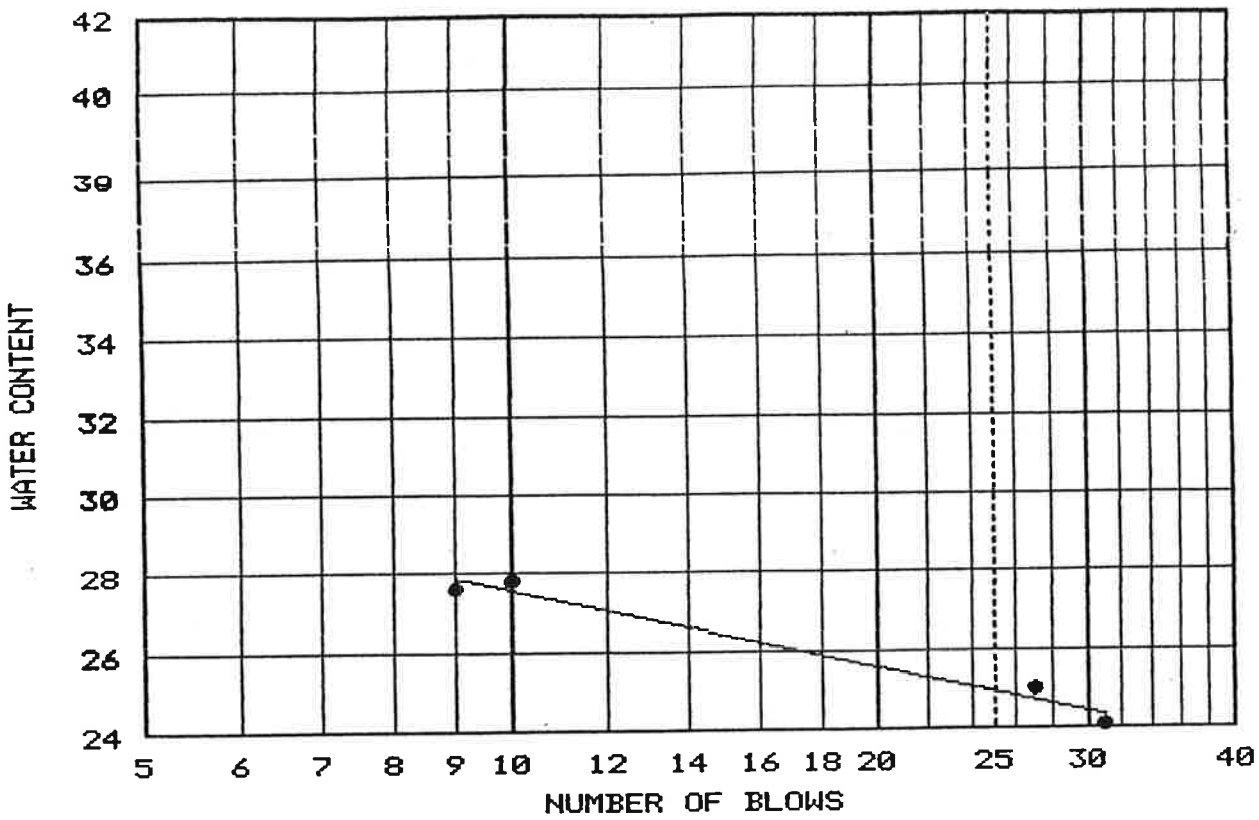

Location + Description	LL	PL	PI	-200	ASTM D 2487-90
●	25.0	19.8	5.2	38.8	SC-SM, Silty, clayey sand

Project No.: PERC #216
Project: AERA #6
BASIN #009
Client: ALABAMA LAND&MINERAL
Location: FOUNDATION MATERIAL

Date: 10-13-92

Remarks:

LIQUID AND PLASTIC LIMITS TEST REPORT

PERC ENGINEERING CO., INC.

Fig. No._____

Shannon, LLC
Shannon Mine No. 4
P-3959
Basin 002
Stability Analysis

```
10:54:55   01-21-93    Execution of *** REAME ***
A version of the  UNIVERSITY of KENTUCKY  computer model
                  by Dr. Yang H. Huang
   Adapted   by   M.B. ENGINEERING PROGRAMS INC.
                  P.O. Box 1453
                  Paintsville, Ky. 41240
   Version 3.02     dated 10-12-1985.
Prepared for : Walker Service Company
               P. O. Box 309 - Plant Street
               Oakman, Alabama 35579

    ****************************************************************
    *  ALABAMA LAND AND MINERAL CORP. AREA 6 MINE BASIN 002P STATI *
    ****************************************************************
    NUMBER OF BOUNDARY LINES=    4
    NUMBER OF POINTS ON BOUNDARY LINES ARE:     2     2     3     7
    ON BOUNDARY LINE NO. 1,POINT NO. AND COORDINATES ARE:
  1       .000    12.500
  2    500.000      .000

    ON BOUNDARY LINE NO. 2,POINT NO. AND COORDINATES ARE:
  1    200.000     8.500
  2    251.200     7.220

    ON BOUNDARY LINE NO. 3,POINT NO. AND COORDINATES ARE:
  1       .000    13.500
  2    200.000     8.500
  3    212.500    13.500

    ON BOUNDARY LINE NO. 4,POINT NO. AND COORDINATES ARE:
  1       .000    13.500
  2    212.500    13.500
  3    218.000    15.700
  4    230.000    15.700
  5    248.060     8.476

  6    251.200     7.220
  7    500.000     1.000

    LINE NO. AND SLOPE OF EACH SEGMENT ARE:
          1     -.025
          2     -.025
          3     -.025      .400
          4      .000      .400      .000     -.400     -.400     -.025
    NO. OF RADIUS CONTROL ZONES=1  PLOT OR NO PLOT=1  NO. OF SEEPAGE CASES=1
    TOTAL NO. OF LINES AT BOTTOM OF RADIUS CONTROL ZONES ARE:  1

    FOR RAD. CONT. ZONE NO.  1     RADIUS DECREMENT=      .000
    NO. OF CIRCLES=  5     ID NO. FOR FIRST CIRCLE=  1

    LINE NO.=  1     BEGIN PT. NO.=  1     END PT. NO.=  2
    SOIL NO.  COHESION     F. ANGLE     UNIT WT.
        1      100.800       30.540      123.040
        2      270.000       33.020      132.140
        3         .000         .000       62.400
    SEISMIC COEFFICIENT=      .000  MIN. DEPTH OF TALLEST SLICE=      .000
    UNIT WEIGHT OF WATER=    62.400
```

THE FACTORS OF SAFETY ARE DETERMINED BY THE SIMPLIFIED BISHOP METHOD

NSPG = 1 NSRCH = 0 # OF SLICES = 10 NO. OF ADD. RADII= 2

NO. OF POINTS ON WATER TABLE FOR EACH CASE= 6

UNDER SEEPAGE CONDITION 1,POINT NO. AND COORDINATES OF WATER TABLE ARE:

1	.000	13.500
2	212.500	13.500
3	228.405	11.616
4	248.060	8.476
5	251.200	7.220
6	500.000	1.000

POINT1=(231.000, 37.000)
POINT2=(231.000, 17.000)
POINT3=(252.000, 17.000)
NJ= 2 NI= 2

AUTOMATIC SEARCH WILL FOLLOW AFTER GRID WITH
XINC= 10.000 AND YINC= 10.000

AT POINT (231.000, 37.000) UNDER SEEPAGE 1,
THE RADIUS AND THE CORRESPONDING FACTOR OF SAFETY ARE:

30.266	6.913
28.477	8.803
26.689	9.998
24.900	12.779
23.112	22.301

LOWEST FACTOR OF SAFETY= 6.913 AND OCCURS AT RADIUS = 30.266

AT POINT (231.000, 27.000) UNDER SEEPAGE 1,
THE RADIUS AND THE CORRESPONDING FACTOR OF SAFETY ARE:

20.269	6.303
18.484	7.938
16.699	9.246
14.914	11.586
13.129	18.651

LOWEST FACTOR OF SAFETY= 6.303 AND OCCURS AT RADIUS = 20.269

AT POINT (231.000, 17.000) UNDER SEEPAGE 1,
THE RADIUS AND THE CORRESPONDING FACTOR OF SAFETY ARE:

10.272	7.590
8.533	9.520
6.794	10.645
5.056	11.957
3.317	14.686

LOWEST FACTOR OF SAFETY= 7.590 AND OCCURS AT RADIUS = 10.272

AT POINT (241.500, 37.000) UNDER SEEPAGE 1,
THE RADIUS AND THE CORRESPONDING FACTOR OF SAFETY ARE:

30.528	3.326
29.232	4.496
27.936	5.172
26.640	6.212
25.344	9.002

```
    LOWEST FACTOR OF SAFETY=     3.326 AND OCCURS AT RADIUS =     30.528

AT POINT (   241.500,    27.000) UNDER SEEPAGE     1,
THE RADIUS AND THE CORRESPONDING FACTOR OF SAFETY ARE:
        20.531      3.131
        19.377      4.179
        18.224      4.759
        17.070      5.822
        15.916      9.285

    LOWEST FACTOR OF SAFETY=     3.131 AND OCCURS AT RADIUS =     20.531

AT POINT (   241.500,    17.000) UNDER SEEPAGE     1,
THE RADIUS AND THE CORRESPONDING FACTOR OF SAFETY ARE:
        10.534      3.542
         9.523      4.892
         8.512      5.679
         7.500      7.170
         6.489     11.112

    LOWEST FACTOR OF SAFETY=     3.542 AND OCCURS AT RADIUS =     10.534

AT POINT (   252.000,    37.000) UNDER SEEPAGE     1,
THE RADIUS AND THE CORRESPONDING FACTOR OF SAFETY ARE:
        30.790      4.024
        30.222      4.865
        29.653      6.519
        29.084      9.050
        28.516     16.328

    LOWEST FACTOR OF SAFETY=     4.024 AND OCCURS AT RADIUS =     30.790

AT POINT (   252.000,    27.000) UNDER SEEPAGE     1,
THE RADIUS AND THE CORRESPONDING FACTOR OF SAFETY ARE:
        20.794      4.827
        20.367      5.803
        19.941      7.742
        19.515     11.383
        19.089     21.200

    LOWEST FACTOR OF SAFETY=     4.827 AND OCCURS AT RADIUS =     20.794

AT POINT (   252.000,    17.000) UNDER SEEPAGE     1,
THE RADIUS AND THE CORRESPONDING FACTOR OF SAFETY ARE:
        10.797      6.629
        10.513      7.896
        10.229     10.208
         9.945     15.616
         9.661     30.601

    LOWEST FACTOR OF SAFETY=     6.629 AND OCCURS AT RADIUS =     10.797


FOR PIEZOMETRIC LINE NO.     1

 POINT (   241.500,    27.000),RADIUS     20.531
    THE MINIMUM FACTOR OF SAFETY IS     3.131


AT POINT (   241.500,    27.000) UNDER SEEPAGE     1,
```

THE RADIUS AND THE CORRESPONDING FACTOR OF SAFETY ARE:

20.531	3.131
19.377	4.179
18.224	4.759
17.070	5.822
15.916	9.285

LOWEST FACTOR OF SAFETY= 3.131 AND OCCURS AT RADIUS = 20.531

AT POINT (251.500, 27.000) UNDER SEEPAGE 1,
THE RADIUS AND THE CORRESPONDING FACTOR OF SAFETY ARE:

20.781	4.502
20.320	5.405
19.859	7.250
19.398	10.698
18.938	19.795

LOWEST FACTOR OF SAFETY= 4.502 AND OCCURS AT RADIUS = 20.781

AT POINT (231.500, 27.000) UNDER SEEPAGE 1,
THE RADIUS AND THE CORRESPONDING FACTOR OF SAFETY ARE:

20.281	5.941
18.505	7.512
16.728	8.741
14.952	10.803
13.176	16.959

LOWEST FACTOR OF SAFETY= 5.941 AND OCCURS AT RADIUS = 20.281

AT POINT (241.500, 37.000) UNDER SEEPAGE 1,
THE RADIUS AND THE CORRESPONDING FACTOR OF SAFETY ARE:

30.528	3.326
29.232	4.496
27.936	5.172
26.640	6.212
25.344	9.002

LOWEST FACTOR OF SAFETY= 3.326 AND OCCURS AT RADIUS = 30.528

AT POINT (241.500, 17.000) UNDER SEEPAGE 1,
THE RADIUS AND THE CORRESPONDING FACTOR OF SAFETY ARE:

10.534	3.542
9.523	4.892
8.512	5.679
7.500	7.170
6.489	11.112

LOWEST FACTOR OF SAFETY= 3.542 AND OCCURS AT RADIUS = 10.534

AT POINT (244.000, 27.000) UNDER SEEPAGE 1,
THE RADIUS AND THE CORRESPONDING FACTOR OF SAFETY ARE:

20.594	2.947
19.613	3.976
18.633	4.854
17.652	6.384
16.672	10.499

LOWEST FACTOR OF SAFETY= 2.947 AND OCCURS AT RADIUS = 20.594

AT POINT (246.500, 27.000) UNDER SEEPAGE 1,

```
THE RADIUS AND THE CORRESPONDING FACTOR OF SAFETY ARE:
        20.656      3.025
        19.849      3.902
        19.042      5.340
        18.234      7.192
        17.427     12.256

    LOWEST FACTOR OF SAFETY=     3.025 AND OCCURS AT RADIUS =     20.656

AT POINT (   244.000,    29.500) UNDER SEEPAGE     1,
THE RADIUS AND THE CORRESPONDING FACTOR OF SAFETY ARE:
        23.093      2.955
        22.077      4.090
        21.061      4.760
        20.045      6.123
        19.029     10.145

    LOWEST FACTOR OF SAFETY=     2.955 AND OCCURS AT RADIUS =     23.093

AT POINT (   244.000,    24.500) UNDER SEEPAGE     1,
THE RADIUS AND THE CORRESPONDING FACTOR OF SAFETY ARE:
        18.094      2.975
        17.149      3.979
        16.205      5.041
        15.260      6.621
        14.315     10.894

    LOWEST FACTOR OF SAFETY=     2.975 AND OCCURS AT RADIUS =     18.094

OR PIEZOMETRIC LINE NO.    1

AT POINT (   244.000,    27.000),RADIUS    20.594
    THE MINIMUM FACTOR OF SAFETY IS     2.947
```

CROSS SECTION IN DISTORTED SCALE
NUMERALS INDICATE BOUNDARY LINE NO. IF THERE ARE MORE THAN 10 BOUND. LINES,ALPHABETS WILL THEN BE USED. P INDICATES P1ZOMETRIC LINE. IF A PORTION OF PIEZOMETRIC LINE COINCIDES WITH THE GROUND OR ANOTHER BOUNDARY LINE,ONLY THE GROUND OR BOUNDARY LINE WILL BE SHOWN. X INDICATES INTERSECTION OF TWO BOUNDARY LINES. * INDICATES FAILURE SURFACE.
THE MINIMUM FACTOR OF SAFETY IS 2.947

```
1.800E+01 X+++++++++X+++++++++X+++++++++X+++++++++X+++++++++X
          +    +                                            +
          +    +                                            +
          +    +                                            +
          +    +                                            +
1.600E+01 X    X    +         +         +         +         X
          +    +             4                              +
          +    +            44                              +
          +    +            44                              +
          +    +            44                              +
1.400E+01 X    X    +       44+         +         +         X
          +    X444444444444X4                              +
          +    +3           34                              +
          +    + 3          34                              +
          +    1  3         34                              +
1.200E+01 X    X1  3+       3*4         +         +         X
          +    + 1  3       3P4                             +
          +    +  1  3      3P4                             +
          +    +   1  3     3P4                             +
          +    +    1  3    3P4                             +
1.000E+01 X    X    +1  3   3 4         +         +         X
          +    +      1  3  3 4                             +
          +    +       1  3 3 4                             +
          +    +        1  33 4                             +
          +    +         1  X *4                            +
8.000E+00 X    X    +     1  2*4        +         +         X
          +    +           1  24                            +
          +    +            1  X                            +
          +    +             1 4                            +
          +    +              1 4                           +
6.000E+00 X    X    +         +1 4      +         +         X
          +    +                1 4                         +
          +    +                 1 4                        +
          +    +                  1 4                       +
          +    +                   1 4                      +
4.000E+00 X    X    +         +     1 4 +         +         X
          +    +                      1 4                   +
          +    +                       1 4                  +
          +    +                        1 4                 +
          +    +                         1 4                +
2.000E+00 X    X    +         +         +1 4      +         X
          +    +                           1 4              +
          +    +                            1 4             +
          +    +                             1 4            +
          +    +                              1             +
 .000E+00 X+++++++++X+++++++++X+++++++++X+++++1+++X+++++++++X
          +    +                                            +
          +    +                                            +
          +    +                                            +
          +    +                                            +
-2.000E+00 X+++++++++X+++++++++X+++++++++X+++++++++X+++++++++X
```

```
          -8.00E+01  8.00E+01  2.40E+02  4.00E+02  5.60E+02  7.20E+02
....RUN COMPLETE....
```

Shannon, LLC
Shannon Mine No. 4
P-3959
Basin 002B
Stability Analysis

```
10:44:43   01-21-93    Execution of *** REAME ***
A version of the  UNIVERSITY of KENTUCKY  computer model
                  by Dr. Yang H. Huang
   Adapted   by   M.B. ENGINEERING PROGRAMS INC.
                  P.O. Box 1453
                  Paintsville, Ky. 41240
   Version 3.02     dated 10-12-1985.
Prepared for : Walker Service Company
               P. O. Box 309 - Plant Street
               Oakman, Alabama 35579

    ****************************************************************
    *  ALABAMA LAND AND MINERAL CORP. AREA 6 MINE BASIN 002B STATI *
    ****************************************************************
    NUMBER OF BOUNDARY LINES=    4
    NUMBER OF POINTS ON BOUNDARY LINES ARE:     2     2     3     7
    ON BOUNDARY LINE NO. 1,POINT NO. AND COORDINATES ARE:
  1       .000    13.000
 2   500.000       .000

    ON BOUNDARY LINE NO. 2,POINT NO. AND COORDINATES ARE:
  1   200.000     8.800
 2   290.374     6.450

    ON BOUNDARY LINE NO. 3,POINT NO. AND COORDINATES ARE:
  1       .000    14.000
 2   200.000     8.800
 3   228.750    20.300

    ON BOUNDARY LINE NO. 4,POINT NO. AND COORDINATES ARE:
  1       .000    20.300
 2   228.750    20.300
 3   236.250    23.300
 4   248.250    23.300
 5   280.680    10.328

 6   290.374     6.450
 7   500.000     1.000

    LINE NO. AND SLOPE OF EACH SEGMENT ARE:
          1     -.026
          2     -.026
          3     -.026      .400
          4      .000      .400      .000     -.400     -.400     -.026
    NO. OF RADIUS CONTROL ZONES=1  PLOT OR NO PLOT=1  NO. OF SEEPAGE CASES=1
    TOTAL NO. OF LINES AT BOTTOM OF RADIUS CONTROL ZONES ARE:  1

    FOR RAD. CONT. ZONE NO.  1     RADIUS DECREMENT=      .000
    NO. OF CIRCLES=  5     ID NO. FOR FIRST CIRCLE=  1

    LINE NO.=  1     BEGIN PT. NO.=  1     END PT. NO.=  2
    SOIL NO.  COHESION     F. ANGLE     UNIT WT.
        1      100.800       30.540      123.040
        2      270.000       33.020      132.140
        3         .000         .000       62.400
    SEISMIC COEFFICIENT=      .000  MIN. DEPTH OF TALLEST SLICE=      .000
    UNIT WEIGHT OF WATER=    62.400
```

```
THE FACTORS OF SAFETY ARE DETERMINED BY THE SIMPLIFIED BISHOP METHOD

NSPG =  1 NSRCH =  0 # OF SLICES = 10 NO. OF ADD. RADII= 2

NO. OF POINTS ON WATER TABLE FOR EACH CASE=   6

UNDER SEEPAGE CONDITION 1,POINT NO. AND COORDINATES OF WATER TABLE ARE:
1       .000    20.300
2    228.750    20.300
3    250.402    16.422
4    280.680    10.328
5    290.374     6.450

6    500.000     1.000


POINT1=(   249.000,    44.000)
POINT2=(   249.000,    24.000)
POINT3=(   291.000,    24.000)
NJ=    2 NI=    2
    AUTOMATIC SEARCH WILL FOLLOW AFTER GRID WITH
    XINC=    10.000 AND YINC=    10.000
AT POINT (   249.000,    44.000) UNDER SEEPAGE     1,
THE RADIUS AND THE CORRESPONDING FACTOR OF SAFETY ARE:
        37.461     7.443
        34.112     8.598
        30.762     9.049
        27.413    10.024
        24.063    13.690

    LOWEST FACTOR OF SAFETY=     7.443 AND OCCURS AT RADIUS =     37.461

AT POINT (   249.000,    34.000) UNDER SEEPAGE     1,
THE RADIUS AND THE CORRESPONDING FACTOR OF SAFETY ARE:
        27.465     7.401
        24.117     7.969
        20.769     8.165
        17.422     9.059
        14.074    12.420

    LOWEST FACTOR OF SAFETY=     7.401 AND OCCURS AT RADIUS =     27.465

AT POINT (   249.000,    24.000) UNDER SEEPAGE     1,
THE RADIUS AND THE CORRESPONDING FACTOR OF SAFETY ARE:
        17.468     7.868
        14.160     8.915
        10.852     9.727
         7.544    11.411
         4.236    13.639

    LOWEST FACTOR OF SAFETY=     7.868 AND OCCURS AT RADIUS =     17.468

AT POINT (   270.000,    44.000) UNDER SEEPAGE     1,
THE RADIUS AND THE CORRESPONDING FACTOR OF SAFETY ARE:
        38.007     2.439
        35.865     2.931
        33.723     3.261
        31.581     3.934
        29.439     5.802
```

```
    LOWEST FACTOR OF SAFETY=     2.439 AND OCCURS AT RADIUS =     38.007

AT POINT (   270.000,    34.000) UNDER SEEPAGE     1,
THE RADIUS AND THE CORRESPONDING FACTOR OF SAFETY ARE:
        28.011      2.446
        26.011      2.984
        24.011      3.379
        22.012      4.201
        20.012      6.235

    LOWEST FACTOR OF SAFETY=     2.446 AND OCCURS AT RADIUS =     28.011

AT POINT (   270.000,    24.000) UNDER SEEPAGE     1,
THE RADIUS AND THE CORRESPONDING FACTOR OF SAFETY ARE:
        18.014      2.841
        16.157      3.492
        14.299      3.943
        12.442      4.809
        10.585      7.023

    LOWEST FACTOR OF SAFETY=     2.841 AND OCCURS AT RADIUS =     18.014

AT POINT (   291.000,    44.000) UNDER SEEPAGE     1,
THE RADIUS AND THE CORRESPONDING FACTOR OF SAFETY ARE:
        38.553      3.317
        37.862      4.002
        37.170      5.289
        36.479      7.317
        35.788     13.378

    LOWEST FACTOR OF SAFETY=     3.317 AND OCCURS AT RADIUS =     38.553

AT POINT (   291.000,    34.000) UNDER SEEPAGE     1,
THE RADIUS AND THE CORRESPONDING FACTOR OF SAFETY ARE:
        28.556      3.760
        28.007      4.547
        27.458      6.232
        26.910      8.719
        26.361     16.196

    LOWEST FACTOR OF SAFETY=     3.760 AND OCCURS AT RADIUS =     28.556

AT POINT (   291.000,    24.000) UNDER SEEPAGE     1,
THE RADIUS AND THE CORRESPONDING FACTOR OF SAFETY ARE:
        18.560      4.607
        18.153      5.558
        17.747      7.428
        17.340     11.284
        16.934     21.348

    LOWEST FACTOR OF SAFETY=     4.607 AND OCCURS AT RADIUS =     18.560


FOR PIEZOMETRIC LINE NO.    1

 POINT (   270.000,    44.000),RADIUS    38.007
    THE MINIMUM FACTOR OF SAFETY IS     2.439


AT POINT (   270.000,    44.000) UNDER SEEPAGE     1,
```

THE RADIUS AND THE CORRESPONDING FACTOR OF SAFETY ARE:

38.007	2.439
35.865	2.931
33.723	3.261
31.581	3.934
29.439	5.802

LOWEST FACTOR OF SAFETY= 2.439 AND OCCURS AT RADIUS = 38.007

AT POINT (280.000, 44.000) UNDER SEEPAGE 1,
THE RADIUS AND THE CORRESPONDING FACTOR OF SAFETY ARE:

38.267	2.264
36.816	2.968
35.365	3.511
33.914	4.589
32.462	7.558

LOWEST FACTOR OF SAFETY= 2.264 AND OCCURS AT RADIUS = 38.267

AT POINT (290.000, 44.000) UNDER SEEPAGE 1,
THE RADIUS AND THE CORRESPONDING FACTOR OF SAFETY ARE:

38.527	3.091
37.767	3.723
37.006	4.962
36.246	6.819
35.485	12.369

LOWEST FACTOR OF SAFETY= 3.091 AND OCCURS AT RADIUS = 38.527

AT POINT (280.000, 54.000) UNDER SEEPAGE 1,
THE RADIUS AND THE CORRESPONDING FACTOR OF SAFETY ARE:

48.264	2.222
46.670	2.838
45.077	3.320
43.483	4.356
41.889	6.995

LOWEST FACTOR OF SAFETY= 2.222 AND OCCURS AT RADIUS = 48.264

AT POINT (280.000, 64.000) UNDER SEEPAGE 1,
THE RADIUS AND THE CORRESPONDING FACTOR OF SAFETY ARE:

58.260	2.275
56.524	2.865
54.788	3.282
53.053	4.137
51.317	6.536

LOWEST FACTOR OF SAFETY= 2.275 AND OCCURS AT RADIUS = 58.260

AT POINT (290.000, 54.000) UNDER SEEPAGE 1,
THE RADIUS AND THE CORRESPONDING FACTOR OF SAFETY ARE:

48.524	2.859
47.621	3.463
46.718	4.457
45.815	6.073
44.913	10.828

LOWEST FACTOR OF SAFETY= 2.859 AND OCCURS AT RADIUS = 48.524

AT POINT (270.000, 54.000) UNDER SEEPAGE 1,

THE RADIUS AND THE CORRESPONDING FACTOR OF SAFETY ARE:

48.004	2.526
45.719	3.041
43.435	3.399
41.151	4.041
38.866	5.476

LOWEST FACTOR OF SAFETY= 2.526 AND OCCURS AT RADIUS = 48.004

AT POINT (282.500, 54.000) UNDER SEEPAGE 1,
THE RADIUS AND THE CORRESPONDING FACTOR OF SAFETY ARE:

48.329	2.243
46.908	2.932
45.487	3.498
44.066	4.607
42.645	7.611

LOWEST FACTOR OF SAFETY= 2.243 AND OCCURS AT RADIUS = 48.329

AT POINT (277.500, 54.000) UNDER SEEPAGE 1,
THE RADIUS AND THE CORRESPONDING FACTOR OF SAFETY ARE:

48.199	2.257
46.432	2.822
44.666	3.231
42.900	4.131
41.134	6.502

LOWEST FACTOR OF SAFETY= 2.257 AND OCCURS AT RADIUS = 48.199

AT POINT (280.000, 56.500) UNDER SEEPAGE 1,
THE RADIUS AND THE CORRESPONDING FACTOR OF SAFETY ARE:

50.763	2.230
49.134	2.831
47.505	3.290
45.875	4.303
44.246	6.872

LOWEST FACTOR OF SAFETY= 2.230 AND OCCURS AT RADIUS = 50.763

AT POINT (280.000, 51.500) UNDER SEEPAGE 1,
THE RADIUS AND THE CORRESPONDING FACTOR OF SAFETY ARE:

45.765	2.222
44.207	2.855
42.649	3.369
41.091	4.409
39.533	7.125

LOWEST FACTOR OF SAFETY= 2.222 AND OCCURS AT RADIUS = 45.765

AT POINT (280.000, 49.000) UNDER SEEPAGE 1,
THE RADIUS AND THE CORRESPONDING FACTOR OF SAFETY ARE:

43.265	2.229
41.743	2.884
40.221	3.417
38.698	4.465
37.176	7.261

LOWEST FACTOR OF SAFETY= 2.229 AND OCCURS AT RADIUS = 43.265

AT POINT (282.500, 51.500) UNDER SEEPAGE 1,

```
THE RADIUS AND THE CORRESPONDING FACTOR OF SAFETY ARE:
        45.830     2.251
        44.444     2.978
        43.059     3.543
        41.674     4.671
        40.288     7.771

    LOWEST FACTOR OF SAFETY=     2.251 AND OCCURS AT RADIUS =     45.830

AT POINT (   277.500,    51.500) UNDER SEEPAGE     1,
THE RADIUS AND THE CORRESPONDING FACTOR OF SAFETY ARE:
        45.700     2.243
        43.969     2.813
        42.238     3.245
        40.508     4.204
        38.777     6.610

    LOWEST FACTOR OF SAFETY=     2.243 AND OCCURS AT RADIUS =     45.700


FOR PIEZOMETRIC LINE NO.    1

AT POINT (   280.000,    51.500),RADIUS    45.765
    THE MINIMUM FACTOR OF SAFETY IS     2.222
```

CROSS SECTION IN DISTORTED SCALE
NUMERALS INDICATE BOUNDARY LINE NO. IF THERE ARE MORE THAN 10 BOUND. LINES,ALPHABETS WILL THEN BE USED. P INDICATES P1ZOMETRIC LINE. IF A PORTION OF PIEZOMETRIC LINE COINCIDES WITH THE GROUND OR ANOTHER BOUNDARY LINE,ONLY THE GROUND OR BOUNDARY LINE WILL BE SHOWN. X INDICATES INTERSECTION OF TWO BOUNDARY LINES. * INDICATES FAILURE SURFACE.
THE MINIMUM FACTOR OF SAFETY IS 2.222

```
3.200E+01 X+++++++++X+++++++++X+++++++++X+++++++++X+++++++++X
          +    +                                            +
          +    +                                            +
          +    +                                            +
          +    +                                            +
2.800E+01 X    X    +         +         +         +         X
          +    +                                            +
          +    +                                            +
          +    +                                            +
          +    +                                            +
2.400E+01 X    X    +         +         +         +         X
          +    +              44                            +
          +    +             4*4                            +
          +    +             4*4                            +
          +    +             4*4                            +
2.000E+01 X    X4444444444444X*4        +         +         X
          +    +            3P*4                            +
          +    +            3 P4                            +
          +    +            3 P4                            +
          +    +            3  P4                           +
1.600E+01 X    X    +       3 +P4       +         +         X
          +    +            3  P4                           +
          +    +            3  P4                           +
          +    333          3  *4                           +
          +    11 33        3  *4                           +
1.200E+01 X    X 11 33      3 +*4       +         +         X
          +    +   11 33    3  *4                           +
          +    +     11 33  3  * 4                          +
          +    +       11 333  * 4                          +
          +    +         11 X2  *4                          +
8.000E+00 X    X    +      11 22*4      +         +         X
          +    +             11 24                          +
          +    +               11X4                         +
          +    +                 1144                       +
          +    +                   1144                     +
4.000E+00 X    X    +         +      1144         +         X
          +    +                        1144                +
          +    +                          1144              +
          +    +                            114             +
          +    +                              14            +
 .000E+00 X+++++++++X+++++++++X+++++++++X+++++1+++X+++++++++X
          +    +                                            +
          +    +                                            +
          +    +                                            +
          +    +                                            +
-4.000E+00 X    X    +         +         +         +         X
          +    +                                            +
          +    +                                            +
          +    +                                            +
          +    +                                            +
-8.000E+00 X+++++++++X+++++++++X+++++++++X+++++++++X+++++++++X
```

```
          -8.00E+01  8.00E+01  2.40E+02  4.00E+02  5.60E+02  7.20E+02
....RUN COMPLETE....
```

Shannon, LLC
Shannon Mine No. 4
P-3959
Basin 003
Stability Analysis

```
12:36:32   12-15-92    Execution of *** REAME ***
* version of the  UNIVERSITY of KENTUCKY  computer model
                   by Dr. Yang H. Huang
   Adapted   by    M.B. ENGINEERING PROGRAMS INC.
                   P.O. Box 1453
                   Paintsville, Ky. 41240
   Version 3.02      dated 10-12-1985.
Prepared for : Walker Service Company
               P. O. Box 309 - Plant Street
               Oakman, Alabama 35579

    ***************************************************************
    *  Alabama Land and Mineral Corp. Area 6 Mine Basin 003P Stati *
    ***************************************************************
    NUMBER OF BOUNDARY LINES=    4
    NUMBER OF POINTS ON BOUNDARY LINES ARE:     2     2     3     7
    ON BOUNDARY LINE NO. 1,POINT NO. AND COORDINATES ARE:
  1       .000      6.500
  2    500.000       .000

    ON BOUNDARY LINE NO. 2,POINT NO. AND COORDINATES ARE:
  1    200.000      4.900
  2    266.667      4.033

    ON BOUNDARY LINE NO. 3,POINT NO. AND COORDINATES ARE:
  1       .000      7.500
  2    200.000      4.900
       219.250     12.600

    ON BOUNDARY LINE NO. 4,POINT NO. AND COORDINATES ARE:
  1       .000     12.600
  2    219.250     12.600
  3    226.250     15.400
  4    238.250     15.400
  5    262.383      5.747

  6    266.667      4.033
  7    500.000      1.000

    LINE NO. AND SLOPE OF EACH SEGMENT ARE:
          1      -.013
          2      -.013
          3      -.013       .400
          4       .000       .400       .000      -.400      -.400      -.013
    NO. OF RADIUS CONTROL ZONES=1  PLOT OR NO PLOT=1  NO. OF SEEPAGE CASES=1
    TOTAL NO. OF LINES AT BOTTOM OF RADIUS CONTROL ZONES ARE:  1

    FOR RAD. CONT. ZONE NO.  1     RADIUS DECREMENT=       .000
    NO. OF CIRCLES=  5     ID NO. FOR FIRST CIRCLE=  1

    LINE NO.=  1     BEGIN PT. NO.=  1     END PT. NO.=  2
    SOIL NO.  COHESION     F. ANGLE     UNIT WT.
        1      230.400       26.560      128.180
        2      100.800       30.540      123.040
        3         .000         .000       62.400
    SEISMIC COEFFICIENT=       .000  MIN. DEPTH OF TALLEST SLICE=      .000
    UNIT WEIGHT OF WATER=    62.400
```

TAKEN FROM
P-3699
ASMC PERMIT FILE

THE FACTORS OF SAFETY ARE DETERMINED BY THE SIMPLIFIED BISHOP METHOD

NSPG = 1 NSRCH = 0 # OF SLICES = 10 NO. OF ADD. RADII= 2

NO. OF POINTS ON WATER TABLE FOR EACH CASE= 6

UNDER SEEPAGE CONDITION 1,POINT NO. AND COORDINATES OF WATER TABLE ARE:

1	.000	12.600
2	219.250	12.600
3	237.929	10.201
4	262.383	5.747
5	266.667	4.033
6	500.000	1.000

POINT1=(239.000, 36.000)
POINT2=(239.000, 16.000)
POINT3=(268.000, 16.000)
NJ= 2 NI= 2

AUTOMATIC SEARCH WILL FOLLOW AFTER GRID WITH
XINC= 10.000 AND YINC= 10.000

AT POINT (239.000, 36.000) UNDER SEEPAGE 1,
THE RADIUS AND THE CORRESPONDING FACTOR OF SAFETY ARE:

32.604	6.118
30.206	6.051
27.808	6.442
25.410	7.151
23.012	9.923
31.805	6.061
31.005	6.006
29.407	6.159
28.607	6.295

LOWEST FACTOR OF SAFETY= 6.006 AND OCCURS AT RADIUS = 31.005

AT POINT (239.000, 26.000) UNDER SEEPAGE 1,
THE RADIUS AND THE CORRESPONDING FACTOR OF SAFETY ARE:

22.605	5.605
20.209	5.481
17.814	5.813
15.418	6.619
13.022	8.634
21.807	5.512
21.008	5.457
19.411	5.519
18.612	5.650

LOWEST FACTOR OF SAFETY= 5.457 AND OCCURS AT RADIUS = 21.008

AT POINT (239.000, 16.000) UNDER SEEPAGE 1,
THE RADIUS AND THE CORRESPONDING FACTOR OF SAFETY ARE:

12.606	6.382
10.252	6.760
7.898	7.463
5.544	8.138
3.190	8.632

TAKEN FROM
P-3699
ASMC PERMIT FILE

LOWEST FACTOR OF SAFETY= 6.382 AND OCCURS AT RADIUS = 12.606

AT POINT (253.500, 36.000) UNDER SEEPAGE 1,
THE RADIUS AND THE CORRESPONDING FACTOR OF SAFETY ARE:

32.793	2.484
31.192	2.404
29.592	2.643
27.991	2.978
26.391	3.716
32.259	2.466
31.726	2.350
30.659	2.470
30.125	2.551

LOWEST FACTOR OF SAFETY= 2.350 AND OCCURS AT RADIUS = 31.726

AT POINT (253.500, 26.000) UNDER SEEPAGE 1,
THE RADIUS AND THE CORRESPONDING FACTOR OF SAFETY ARE:

22.794	2.398
21.336	2.294
19.878	2.527
18.421	2.989
16.963	4.017
22.308	2.380
21.822	2.287
20.850	2.351
20.364	2.430

LOWEST FACTOR OF SAFETY= 2.287 AND OCCURS AT RADIUS = 21.822

AT POINT (253.500, 16.000) UNDER SEEPAGE 1,
THE RADIUS AND THE CORRESPONDING FACTOR OF SAFETY ARE:

12.794	2.804
11.480	2.694
10.165	2.980
8.850	3.509
7.535	4.625
12.356	2.804
11.918	2.743
11.041	2.779
10.603	2.873

LOWEST FACTOR OF SAFETY= 2.694 AND OCCURS AT RADIUS = 11.480

AT POINT (268.000, 36.000) UNDER SEEPAGE 1,
THE RADIUS AND THE CORRESPONDING FACTOR OF SAFETY ARE:

32.981	3.859
32.420	4.028
31.859	3.270
31.298	4.362
30.737	7.454
32.233	4.012
32.046	3.759
31.672	3.544
31.485	3.900

TAKEN FROM
P-3699
ASMC PERMIT FILE

```
    LOWEST FACTOR OF SAFETY=     3.270 AND OCCURS AT RADIUS =     31.859

AT POINT (   268.000,     26.000) UNDER SEEPAGE     1,
THE RADIUS AND THE CORRESPONDING FACTOR OF SAFETY ARE:
        22.982     5.089
        22.564     5.520
        22.145     5.780
        21.727     5.187
        21.309     9.264

        22.006     4.150
        21.867     4.594
        21.588     6.005
        21.448     7.234

    LOWEST FACTOR OF SAFETY=     4.150 AND OCCURS AT RADIUS =     22.006


****WARNING AT NEXT CENTER**** WHEN RADIUS IS    11.698
CENTER OF CIRCLE LIES BELOW GROUND LINE OR CIRCLE DOES NOT INTERCEPT
GROUND LINE PROPERLY OR THE CIRCLE CUTS THE SLOPE VERY SLIGHTLY,
SO A LARGE FACTOR OF SAFETY IS ASSIGNED.
AT POINT (   268.000,     16.000) UNDER SEEPAGE     1,
THE RADIUS AND THE CORRESPONDING FACTOR OF SAFETY ARE:
        12.983     8.378
        12.708     9.524
        12.432    11.260
        12.157    14.025
        11.881    12.883

        11.789    18.839
        11.698**********

    LOWEST FACTOR OF SAFETY=     8.378 AND OCCURS AT RADIUS =     12.983


FOR PIEZOMETRIC LINE NO.    1

AT POINT (   253.500,     26.000),RADIUS    21.822
    THE MINIMUM FACTOR OF SAFETY IS     2.287


AT POINT (   253.500,     26.000) UNDER SEEPAGE     1,
THE RADIUS AND THE CORRESPONDING FACTOR OF SAFETY ARE:
        22.794     2.398
        21.336     2.294
        19.878     2.527
        18.421     2.989
        16.963     4.017

        22.308     2.380
        21.822     2.287
        20.850     2.351
        20.364     2.430

    LOWEST FACTOR OF SAFETY=     2.287 AND OCCURS AT RADIUS =     21.822

AT POINT (   263.500,     26.000) UNDER SEEPAGE     1,
THE RADIUS AND THE CORRESPONDING FACTOR OF SAFETY ARE:
        22.924     2.962
```

TAKEN FROM
P-3699
ASMC PERMIT FILE

```
        22.183      2.899
        21.442      2.858
        20.701      3.726
        19.960      6.104

        21.936      2.685
        21.689      2.687
        21.195      3.076
        20.948      3.359

    LOWEST FACTOR OF SAFETY=     2.685 AND OCCURS AT RADIUS =     21.936

AT POINT (   243.500,    26.000) UNDER SEEPAGE     1,
THE RADIUS AND THE CORRESPONDING FACTOR OF SAFETY ARE:
        22.664      3.617
        20.489      3.569
        18.315      3.824
        16.140      4.094
        13.966      4.578

        21.939      3.584
        21.214      3.527
        19.764      3.641
        19.040      3.729

    LOWEST FACTOR OF SAFETY=     3.527 AND OCCURS AT RADIUS =     21.214

AT POINT (   253.500,    36.000) UNDER SEEPAGE     1,
THE RADIUS AND THE CORRESPONDING FACTOR OF SAFETY ARE:
        32.793      2.484
        31.192      2.404
        29.592      2.643
        27.991      2.978
        26.391      3.716

        32.259      2.466
        31.726      2.350
        30.659      2.470
        30.125      2.551

    LOWEST FACTOR OF SAFETY=     2.350 AND OCCURS AT RADIUS =     31.726

AT POINT (   253.500,    16.000) UNDER SEEPAGE     1,
THE RADIUS AND THE CORRESPONDING FACTOR OF SAFETY ARE:
        12.794      2.804
        11.480      2.694
        10.165      2.980
         8.850      3.509
         7.535      4.625

        12.356      2.804
        11.918      2.743
        11.041      2.779
        10.603      2.873

    LOWEST FACTOR OF SAFETY=     2.694 AND OCCURS AT RADIUS =     11.480

AT POINT (   256.000,    26.000) UNDER SEEPAGE     1,
THE RADIUS AND THE CORRESPONDING FACTOR OF SAFETY ARE:
        22.826      2.342
```

TAKEN FROM
P-3699
ASMC PERMIT FILE

```
        21.548      2.218
        20.269      2.523
        18.991      3.084
        17.712      4.305

        22.400      2.334
        21.974      2.278
        21.122      2.300
        20.695      2.404

    LOWEST FACTOR OF SAFETY=     2.218 AND OCCURS AT RADIUS =     21.548

AT POINT (   258.500,     26.000) UNDER SEEPAGE     1,
THE RADIUS AND THE CORRESPONDING FACTOR OF SAFETY ARE:
        22.859      2.389
        21.759      2.229
        20.660      2.569
        19.561      3.222
        18.462      4.700

        22.492      2.399
        22.126      2.377
        21.393      2.321
        21.027      2.434

    LOWEST FACTOR OF SAFETY=     2.229 AND OCCURS AT RADIUS =     21.759

AT POINT (   256.000,     28.500) UNDER SEEPAGE     1,
THE RADIUS AND THE CORRESPONDING FACTOR OF SAFETY ARE:
        25.326      2.326
        24.012      2.195
        22.698      2.479
        21.383      3.024
        20.069      4.207

        24.888      2.314
        24.450      2.244
        23.574      2.273
        23.136      2.368

    LOWEST FACTOR OF SAFETY=     2.195 AND OCCURS AT RADIUS =     24.012

AT POINT (   256.000,     31.000) UNDER SEEPAGE     1,
THE RADIUS AND THE CORRESPONDING FACTOR OF SAFETY ARE:
        27.826      2.335
        26.476      2.202
        25.126      2.463
        23.776      2.967
        22.426      4.118

        27.376      2.318
        26.926      2.244
        26.026      2.272
        25.576      2.358

    LOWEST FACTOR OF SAFETY=     2.202 AND OCCURS AT RADIUS =     26.476

AT POINT (   258.500,     28.500) UNDER SEEPAGE     1,
THE RADIUS AND THE CORRESPONDING FACTOR OF SAFETY ARE:
        25.358      2.345
```

TAKEN FROM
P-3699
ASMC PERMIT FILE

```
        24.223      2.190
        23.088      2.526
        21.954      3.162
        20.819      4.581

        24.980      2.347
        24.602      2.317
        23.845      2.284
        23.467      2.391

    LOWEST FACTOR OF SAFETY=     2.190 AND OCCURS AT RADIUS =     24.223

AT POINT (   261.000,     28.500) UNDER SEEPAGE     1,
THE RADIUS AND THE CORRESPONDING FACTOR OF SAFETY ARE:
        25.391      2.502
        24.435      2.383
        23.479      2.621
        22.524      3.357
        21.568      5.105

        25.072      2.503
        24.754      2.496
        24.117      2.358
        23.798      2.475

    LOWEST FACTOR OF SAFETY=     2.358 AND OCCURS AT RADIUS =     24.117

AT POINT (   258.500,     31.000) UNDER SEEPAGE     1,
THE RADIUS AND THE CORRESPONDING FACTOR OF SAFETY ARE:
        27.858      2.319
        26.687      2.165
        25.517      2.491
        24.346      3.110
        23.175      4.473

        27.468      2.318
        27.078      2.280
        26.297      2.252
        25.907      2.354

    LOWEST FACTOR OF SAFETY=     2.165 AND OCCURS AT RADIUS =     26.687

AT POINT (   258.500,     33.500) UNDER SEEPAGE     1,
THE RADIUS AND THE CORRESPONDING FACTOR OF SAFETY ARE:
        30.358      2.322
        29.152      2.158
        27.945      2.460
        26.739      3.059
        25.532      4.374

        29.956      2.313
        29.554      2.263
        28.749      2.240
        28.347      2.335

    LOWEST FACTOR OF SAFETY=     2.158 AND OCCURS AT RADIUS =     29.152

AT POINT (   258.500,     36.000) UNDER SEEPAGE     1,
THE RADIUS AND THE CORRESPONDING FACTOR OF SAFETY ARE:
        32.858      2.333
```

TAKEN FROM
P-3699
ASMC PERMIT FILE

```
        31.616      2.172
        30.374      2.453
        29.131      3.002
        27.889      4.283

        32.444      2.325
        32.030      2.268
        31.202      2.248
        30.788      2.335

    LOWEST FACTOR OF SAFETY=     2.172 AND OCCURS AT RADIUS =     31.616

AT POINT (    261.000,     33.500) UNDER SEEPAGE     1,
THE RADIUS AND THE CORRESPONDING FACTOR OF SAFETY ARE:
        30.390      2.416
        29.363      2.193
        28.336      2.551
        27.309      3.245
        26.282      4.836

        30.048      2.402
        29.706      2.382
        29.021      2.290
        28.678      2.405

    LOWEST FACTOR OF SAFETY=     2.193 AND OCCURS AT RADIUS =     29.363

AT POINT (    256.000,     33.500) UNDER SEEPAGE     1,
THE RADIUS AND THE CORRESPONDING FACTOR OF SAFETY ARE:
        30.325      2.353
        28.940      2.224
        27.554      2.475
        26.169      2.922
        24.783      4.037

        29.864      2.337
        29.402      2.252
        28.478      2.295
        28.016      2.380

    LOWEST FACTOR OF SAFETY=     2.224 AND OCCURS AT RADIUS =     28.940


FOR PIEZOMETRIC LINE NO.     1

AT POINT (    258.500,     33.500),RADIUS     29.152
    THE MINIMUM FACTOR OF SAFETY IS     2.158
```

TAKEN FROM
P-3699
ASMC PERMIT FILE

CROSS SECTION IN DISTORTED SCALE
NUMERALS INDICATE BOUNDARY LINE NO. IF THERE ARE MORE THAN 10
BOUND. LINES,ALPHABETS WILL THEN BE USED. P INDICATES
P1ZOMETRIC LINE. IF A PORTION OF PIEZOMETRIC LINE COINCIDES WITH
THE GROUND OR ANOTHER BOUNDARY LINE,ONLY THE GROUND OR BOUNDARY
LINE WILL BE SHOWN. X INDICATES INTERSECTION OF TWO BOUNDARY
LINES. * INDICATES FAILURE SURFACE.
THE MINIMUM FACTOR OF SAFETY IS 2.158

```
 1.800E+01 X+++++++++X+++++++++X+++++++++X+++++++++X+++++++++X
           +    +                                            +
           +    +                                            +
           +    +                                            +
           +    +                                            +
 1.600E+01 X    X    +         +         +         +         +
           +    +              *                             X
           +    +             44                             +
           +    +             44                             +
           +    +             44                             +
 1.400E+01 X    X    +        44         +         +         +
           +    +             44                             X
           +    +             44                             +
           +    44444444444444X4                             +
           +    +            3P4                             +
 1.200E+01 X    X    +       3P4         +         +         +
           +    +            3P4                             X
           +    +            3P4                             +
           +    +            3P4                             +
           +    +            3P4                             +
 1.000E+01 X    X    +       3 4                             +
           +    +            3 4         +         +         +
           +    +            3 4                             X
           +    +            3 4                             +
           +    +            3 4                             +
           +    +            3 4                             +
 8.000E+00 X    X    +       3 4                             +
           +    33           3 4         +         +         +
           +    + 33         3 4                             X
           +    +   33       3 4                             +
           +    11    33     3 4                             +
 6.000E+00 X    X 11 +  33   3 4*                            +
           +    +   11    33 3  4         +         +         +
           +    +     11    33  4                             X
           +    +       11   X2 4*                            +
           +    +         11   2X                             +
 4.000E+00 X    X    +      11 + X4                            +
           +    +              11   44         +         +         +
           +    +                11   44                             X
           +    +                  11   4                           +
           +    +                    11  44                         +
 2.000E+00 X    X    +          +      11 +44                      +
           +    +                        11  44                     X
           +    +                          11  4                    +
           +    +                            11 4                   +
           +    +                              1                    +
 .000E+00  X+++++++++X+++++++++X+++++++++X+++++1+++X+++++++++X
           +    +                                            +
           +    +                                            +
           +    +                                            +
           +    +                                            +
-2.000E+00 X+++++++++X+++++++++X+++++++++X+++++++++X+++++++++X
```

TAKEN FROM
P-3699
ASMC PERMIT FILE

```
          -8.00E+01  8.00E+01  2.40E+02  4.00E+02  5.60E+02  7.20E+02
....RUN COMPLETE....
```

TAKEN FROM
P-3699
ASMC PERMIT FILE

Shannon, LLC
Shannon Mine No. 4
P-3959
Basin 003A
Stability Analysis

```
12:25:57   12-15-92    Execution of *** REAME ***
A version of the  UNIVERSITY of KENTUCKY  computer model
                  by Dr. Yang H. Huang
  Adapted   by    M.B. ENGINEERING PROGRAMS INC.
                  P.O. Box 1453
                  Paintsville, Ky. 41240
  Version 3.02      dated 10-12-1985.
Prepared for : Walker Service Company
               P. O. Box 309 - Plant Street
               Oakman, Alabama 35579

    ***************************************************************
    *  Alabama Land and Mineral Corp. Area 6 Mine Basin 003A Stati *
    ***************************************************************
    NUMBER OF BOUNDARY LINES=    4
    NUMBER OF POINTS ON BOUNDARY LINES ARE:     2     2     3     7
    ON BOUNDARY LINE NO. 1,POINT NO. AND COORDINATES ARE:
  1       .000    16.000
  2    500.000      .000

    ON BOUNDARY LINE NO. 2,POINT NO. AND COORDINATES ARE:
  1    200.000    10.600
  2    305.435     7.226

    ON BOUNDARY LINE NO. 3,POINT NO. AND COORDINATES ARE:
  1       .000    17.000
  2    200.000    10.600
    236.250    25.100

    ON BOUNDARY LINE NO. 4,POINT NO. AND COORDINATES ARE:
  1       .000    25.100
  2    236.250    25.100
  3    242.500    27.600
  4    254.500    27.600
  5    292.029    12.588

  6    305.435     7.226
  7    500.000     1.000

    LINE NO. AND SLOPE OF EACH SEGMENT ARE:
          1     -.032
          2     -.032
          3     -.032      .400
          4      .000      .400      .000     -.400     -.400     -.032
    NO. OF RADIUS CONTROL ZONES=1  PLOT OR NO PLOT=1  NO. OF SEEPAGE CASES=1
    TOTAL NO. OF LINES AT BOTTOM OF RADIUS CONTROL ZONES ARE:  1

    FOR RAD. CONT. ZONE NO.  1     RADIUS DECREMENT=      .000
    NO. OF CIRCLES=  5     ID NO. FOR FIRST CIRCLE=  1

    LINE NO.=  1     BEGIN PT. NO.=  1     END PT. NO.=  2
    SOIL NO.  COHESION     F. ANGLE     UNIT WT.
        1      230.400       26.560      128.180
        2      100.800       30.540      123.040
        3         .000         .000       62.400
    SEISMIC COEFFICIENT=      .000  MIN. DEPTH OF TALLEST SLICE=      .000
    UNIT WEIGHT OF WATER=    62.400
```

THE FACTORS OF SAFETY ARE DETERMINED BY THE SIMPLIFIED BISHOP METHOD

NSPG = 1 NSRCH = 0 # OF SLICES = 10 NO. OF ADD. RADII= 2

NO. OF POINTS ON WATER TABLE FOR EACH CASE= 6

UNDER SEEPAGE CONDITION 1,POINT NO. AND COORDINATES OF WATER TABLE ARE:

1	.000	25.100
2	236.250	25.100
3	258.702	20.274
4	292.029	12.588
5	305.435	7.226
6	500.000	1.000

POINT1=(256.000, 49.000)
POINT2=(256.000, 29.000)
POINT3=(306.000, 29.000)
NJ= 2 NI= 2

AUTOMATIC SEARCH WILL FOLLOW AFTER GRID WITH
XINC= 10.000 AND YINC= 10.000

AT POINT (256.000, 49.000) UNDER SEEPAGE 1,
THE RADIUS AND THE CORRESPONDING FACTOR OF SAFETY ARE:

41.171	5.189
37.227	5.374
33.284	5.660
29.340	6.090
25.396	7.017

LOWEST FACTOR OF SAFETY= 5.189 AND OCCURS AT RADIUS = 41.171

AT POINT (256.000, 39.000) UNDER SEEPAGE 1,
THE RADIUS AND THE CORRESPONDING FACTOR OF SAFETY ARE:

31.176	5.302
27.240	5.283
23.305	5.234
19.369	5.487
15.434	6.328
25.929	5.279
24.617	5.249
21.993	5.277
20.681	5.311

LOWEST FACTOR OF SAFETY= 5.234 AND OCCURS AT RADIUS = 23.305

AT POINT (256.000, 29.000) UNDER SEEPAGE 1,
THE RADIUS AND THE CORRESPONDING FACTOR OF SAFETY ARE:

21.181	5.843
17.316	5.579
13.451	5.773
9.587	6.401
5.722	6.448
19.893	5.687
18.605	5.639
16.028	5.640
14.740	5.759

LOWEST FACTOR OF SAFETY= 5.579 AND OCCURS AT RADIUS = 17.316

AT POINT (281.000, 49.000) UNDER SEEPAGE 1,
THE RADIUS AND THE CORRESPONDING FACTOR OF SAFETY ARE:

41.971	1.798
39.519	1.777
37.067	1.923
34.615	2.254
32.163	3.009
41.153	1.769
40.336	1.751
38.701	1.813
37.884	1.861

LOWEST FACTOR OF SAFETY= 1.751 AND OCCURS AT RADIUS = 40.336

AT POINT (281.000, 39.000) UNDER SEEPAGE 1,
THE RADIUS AND THE CORRESPONDING FACTOR OF SAFETY ARE:

31.976	1.819
29.666	1.806
27.356	1.985
25.046	2.346
22.736	3.167
31.206	1.796
30.436	1.775
28.896	1.849
28.126	1.910

LOWEST FACTOR OF SAFETY= 1.775 AND OCCURS AT RADIUS = 30.436

AT POINT (281.000, 29.000) UNDER SEEPAGE 1,
THE RADIUS AND THE CORRESPONDING FACTOR OF SAFETY ARE:

21.981	2.063
19.813	2.041
17.645	2.203
15.477	2.556
13.310	3.451
21.258	2.039
20.536	2.005
19.090	2.082
18.368	2.135

LOWEST FACTOR OF SAFETY= 2.005 AND OCCURS AT RADIUS = 20.536

AT POINT (306.000, 49.000) UNDER SEEPAGE 1,
THE RADIUS AND THE CORRESPONDING FACTOR OF SAFETY ARE:

42.770	2.681
42.015	2.604
41.261	2.398
40.506	3.139
39.751	5.368
41.764	2.132
41.512	2.251
41.009	2.582
40.757	2.820

```
    LOWEST FACTOR OF SAFETY=     2.132 AND OCCURS AT RADIUS =     41.764

AT POINT (   306.000,    39.000) UNDER SEEPAGE     1,
THE RADIUS AND THE CORRESPONDING FACTOR OF SAFETY ARE:
        32.775     3.158
        32.162     3.202
        31.550     2.633
        30.937     3.506
        30.324     6.153

        31.958     3.093
        31.754     2.459
        31.346     2.850
        31.141     3.131

    LOWEST FACTOR OF SAFETY=     2.459 AND OCCURS AT RADIUS =     31.754

AT POINT (   306.000,    29.000) UNDER SEEPAGE     1,
THE RADIUS AND THE CORRESPONDING FACTOR OF SAFETY ARE:
        22.780     4.067
        22.310     4.312
        21.839     3.992
        21.368     4.260
        20.897     7.745

        22.153     4.370
        21.996     4.339
        21.682     3.400
        21.525     3.765

    LOWEST FACTOR OF SAFETY=     3.400 AND OCCURS AT RADIUS =     21.682


FOR PIEZOMETRIC LINE NO.    1

AT POINT (   281.000,    49.000),RADIUS    40.336
    THE MINIMUM FACTOR OF SAFETY IS     1.751


AT POINT (   281.000,    49.000) UNDER SEEPAGE     1,
THE RADIUS AND THE CORRESPONDING FACTOR OF SAFETY ARE:
        41.971     1.798
        39.519     1.777
        37.067     1.923
        34.615     2.254
        32.163     3.009

        41.153     1.769
        40.336     1.751
        38.701     1.813
        37.884     1.861

    LOWEST FACTOR OF SAFETY=     1.751 AND OCCURS AT RADIUS =     40.336

AT POINT (   291.000,    49.000) UNDER SEEPAGE     1,
THE RADIUS AND THE CORRESPONDING FACTOR OF SAFETY ARE:
        42.290     1.706
        40.517     1.673
        38.744     1.871
        36.971     2.301
```

```
        35.198      3.478

        41.699      1.695
        41.108      1.626
        39.926      1.725
        39.335      1.789

    LOWEST FACTOR OF SAFETY=     1.626 AND OCCURS AT RADIUS =     41.108

AT POINT (   301.000,    49.000) UNDER SEEPAGE     1,
THE RADIUS AND THE CORRESPONDING FACTOR OF SAFETY ARE:
        42.610      2.038
        41.516      1.792
        40.422      2.062
        39.328      2.624
        38.234      4.279

        42.245      2.016
        41.881      1.962
        41.151      1.864
        40.787      1.952

    LOWEST FACTOR OF SAFETY=     1.792 AND OCCURS AT RADIUS =     41.516

AT POINT (   291.000,    59.000) UNDER SEEPAGE     1,
THE RADIUS AND THE CORRESPONDING FACTOR OF SAFETY ARE:
        52.285      1.681
        50.370      1.650
        48.455      1.844
        46.540      2.274
        44.625      3.313

        51.647      1.663
        51.009      1.606
        49.732      1.697
        49.094      1.759

    LOWEST FACTOR OF SAFETY=     1.606 AND OCCURS AT RADIUS =     51.009

AT POINT (   291.000,    69.000) UNDER SEEPAGE     1,
THE RADIUS AND THE CORRESPONDING FACTOR OF SAFETY ARE:
        62.280      1.716
        60.223      1.678
        58.166      1.853
        56.109      2.248
        54.052      3.177

        61.594      1.692
        60.909      1.641
        59.537      1.726
        58.852      1.782

    LOWEST FACTOR OF SAFETY=     1.641 AND OCCURS AT RADIUS =     60.909

AT POINT (   301.000,    59.000) UNDER SEEPAGE     1,
THE RADIUS AND THE CORRESPONDING FACTOR OF SAFETY ARE:
        52.605      1.936
        51.369      1.742
        50.133      2.007
        48.897      2.540
```

```
        47.660      4.091

        52.193      1.909
        51.781      1.838
        50.957      1.813
        50.545      1.900

    LOWEST FACTOR OF SAFETY=     1.742 AND OCCURS AT RADIUS =     51.369

AT POINT (   281.000,    59.000) UNDER SEEPAGE     1,
THE RADIUS AND THE CORRESPONDING FACTOR OF SAFETY ARE:
        51.965      1.844
        49.372      1.832
        46.778      1.989
        44.184      2.290
        41.590      2.882

        51.101      1.816
        50.236      1.805
        48.507      1.871
        47.642      1.924

    LOWEST FACTOR OF SAFETY=     1.805 AND OCCURS AT RADIUS =     50.236

AT POINT (   293.500,    59.000) UNDER SEEPAGE     1,
THE RADIUS AND THE CORRESPONDING FACTOR OF SAFETY ARE:
        52.365      1.693
        50.620      1.648
        48.875      1.864
        47.129      2.307
        45.384      3.473

        51.783      1.681
        51.202      1.605
        50.038      1.704
        49.456      1.775

    LOWEST FACTOR OF SAFETY=     1.605 AND OCCURS AT RADIUS =     51.202

AT POINT (   296.000,    59.000) UNDER SEEPAGE     1,
THE RADIUS AND THE CORRESPONDING FACTOR OF SAFETY ARE:
        52.445      1.733
        50.870      1.666
        49.294      1.895
        47.718      2.360
        46.143      3.667

        51.920      1.724
        51.395      1.616
        50.344      1.727
        49.819      1.802

    LOWEST FACTOR OF SAFETY=     1.616 AND OCCURS AT RADIUS =     51.395

AT POINT (   293.500,    61.500) UNDER SEEPAGE     1,
THE RADIUS AND THE CORRESPONDING FACTOR OF SAFETY ARE:
        54.864      1.690
        53.083      1.645
        51.302      1.859
        49.521      2.302
```

```
        47.741      3.430

        54.270      1.676
        53.677      1.604
        52.489      1.698
        51.896      1.768

    LOWEST FACTOR OF SAFETY=     1.604 AND OCCURS AT RADIUS =     53.677

AT POINT (   293.500,    64.000) UNDER SEEPAGE     1,
THE RADIUS AND THE CORRESPONDING FACTOR OF SAFETY ARE:
        57.363      1.690
        55.546      1.646
        53.730      1.853
        51.914      2.297
        50.097      3.390

        56.757      1.674
        56.152      1.604
        54.941      1.697
        54.335      1.763

    LOWEST FACTOR OF SAFETY=     1.604 AND OCCURS AT RADIUS =     56.152

AT POINT (   296.000,    61.500) UNDER SEEPAGE     1,
THE RADIUS AND THE CORRESPONDING FACTOR OF SAFETY ARE:
        54.944      1.722
        53.333      1.660
        51.722      1.889
        50.111      2.352
        48.499      3.619

        54.407      1.711
        53.870      1.609
        52.796      1.721
        52.259      1.796

    LOWEST FACTOR OF SAFETY=     1.609 AND OCCURS AT RADIUS =     53.870

AT POINT (   291.000,    61.500) UNDER SEEPAGE     1,
THE RADIUS AND THE CORRESPONDING FACTOR OF SAFETY ARE:
        54.784      1.688
        52.833      1.652
        50.883      1.840
        48.932      2.269
        46.982      3.277

        54.134      1.665
        53.484      1.609
        52.183      1.699
        51.533      1.759

    LOWEST FACTOR OF SAFETY=     1.609 AND OCCURS AT RADIUS =     53.484


FOR PIEZOMETRIC LINE NO.    1

AT POINT (   293.500,    61.500),RADIUS    53.677
    THE MINIMUM FACTOR OF SAFETY IS     1.604
```

CROSS SECTION IN DISTORTED SCALE
NUMERALS INDICATE BOUNDARY LINE NO. IF THERE ARE MORE THAN 10
BOUND. LINES,ALPHABETS WILL THEN BE USED. P INDICATES
P1ZOMETRIC LINE. IF A PORTION OF PIEZOMETRIC LINE COINCIDES WITH
THE GROUND OR ANOTHER BOUNDARY LINE,ONLY THE GROUND OR BOUNDARY
LINE WILL BE SHOWN. X INDICATES INTERSECTION OF TWO BOUNDARY
LINES. * INDICATES FAILURE SURFACE.
THE MINIMUM FACTOR OF SAFETY IS 1.604

```
3.600E+01 X+++++++++X+++++++++X+++++++++X+++++++++X+++++++++X
          +    +                                           +
          +    +                                           +
          +    +                                           +
          +    +                                           +
3.200E+01 X    X    +         +         +         +         X
          +    +                                           +
          +    +                                           +
          +    +                                           +
          +    +                                           +
2.800E+01 X    X    +         44        +         +         X
          +    +              44                           +
          +    +              44                           +
          +    +              44                           +
          +    444444444444444X4                           +
2.400E+01 X    X    +        3P4        +         +         X
          +    +             3P4                           +
          +    +             3P4                           +
          +    +             3P4                           +
          +    +             3P4                           +
2.000E+01 X    X    +        3+P4       +         +         X
          +    +             3 P4                          +
          +    +             3 P4                          +
          +    +             3 P4                          +
          +    33           3  P4                          +
1.600E+01 X    X133 +       3 + 4       +         +         X
          +    + 113        3   4                          +
          +    +   133      3   4                          +
          +    +    1133    3   4                          +
          +    +      1 3   3   *4                         +
1.200E+01 X    X    +  1133 3 + *4      +         +         X
          +    +         1 33   *4                         +
          +    +          11X2  *4                         +
          +    +            1 2  4                         +
          +    +             11224*                        +
8.000E+00 X    X    +         +11X      +         +         X
          +    +                 1X4                       +
          +    +                  114                      +
          +    +                    144                    +
          +    +                     114                   +
4.000E+00 X    X    +         +        144        +         X
          +    +                         114               +
          +    +                           144             +
          +    +                            114            +
          +    +                              14           +
 .000E+00 X+++++++++X+++++++++X+++++++++X+++++1+++X+++++++++X
          +    +                                           +
          +    +                                           +
          +    +                                           +
          +    +                                           +
-4.000E+00 X+++++++++X+++++++++X+++++++++X+++++++++X+++++++++X
```

```
          -8.00E+01  8.00E+01  2.40E+02  4.00E+02  5.60E+02  7.20E+02
....RUN COMPLETE....
```

Shannon, LLC
Shannon Mine No. 4
P-3959
Basin 008
Stability Analysis

REAME (Rotational Equilibrium Analysis of Multilayered Embankments)
Implemented on the 16-bit Microcomputers C. F. Hains, Jr. and D. M. Hains
2301 22nd Ave.
Northport, AL 35476
(205)-339-6536

Shannon Mine No.4 Basin 008

Number of cases to be analyzed 1

Case Number 1

Number of boundary lines= 4
Number of points on boundary lines are: 2 2 3 7

On boundary line no. 1 Point no. and coordinates are:
1 .000 10.000 2 500.000 .000

On boundary line no. 2 Point no. and coordinates are:
1 200.000 8.000 2 271.053 6.579

On boundary line no. 3 Point no. and coordinates are:
1 .000 12.000 2 200.000 8.000 3 222.500 17.000

On boundary line no. 4 Point no. and coordinates are:
1 .000 17.000 2 222.500 17.000 3 227.750 19.100 4 239.750 19.100 5 264.279 9.288
6 271.053 6.579 7 500.000 2.000

Line no. and slope of each segment are:
1 -.020
2 -.020
3 -.020 .400
4 .000 .400 .000 -.400 -.400 -.020

No. of radius control zones= 1 Plot or no plot= 1 No. of seepage cases= 1

Total no. of lines at bottom of radius control zones is: 1

For rad. cont. zone no. 1 Radius decrement= .000 No. of Circles= 5 Id no. for first circle=, 1
Line no.= 1 Begin pt. no.= 1 End pt. no.= 2

Soil no.	Cohesion	F. angle	Unit wt.
1	230.400	26.560	128.180
2	100.800	30.540	123.040
3	.000	.000	62.400

Seismic coefficient= .000 Min. depth of tallest slice= .000 Unit weight of water= 62.400

The factors of safety are determined by the SIMPLIFIED BISHOP method

NSPG= 1 NSRCH= 0 No. of slices= 10 No. of add. radii= 2
No. of points on water table for each case= 6

Under seepage condition 1point no. and coordinates of water table are:
1 .000 17.000 2 222.500 17.000 3 240.014 14.291 4 264.279 9.288 5 271.053 6.579

6 500.000 2.000

point1=(241.000, 40.000) point2=(241.000, 20.000) point3=(272.000, 20.000) NJ= 2 NI= 2
Automatic search will follow after grid with XINC= 10.000 and YINC= 10.000

At point (241.000, 40.000) under seepage 1,the radius and the corresponding factor of safety are:

34.813	5.412	32.038	5.330	29.263	5.608	26.488	6.352	23.712	8.530
33.888	5.415	32.963	5.346	31.113	5.406	30.188	5.496		

Lowest factor of safety= 5.330 and occurs at radius = 32.038

At point (241.000, 30.000) under seepage 1,the radius and the corresponding factor of safety are:

24.815	5.148	22.046	4.914	19.278	5.079	16.509	5.859	13.740	7.402
23.892	5.092	22.969	4.987	21.123	4.931	20.201	4.976		

Lowest factor of safety= 4.914 and occurs at radius = 22.046

****WARNING AT NEXT CENTER**** When radius is 4.003
center of circle lies below ground line or circle does not intercept ground line properly, or the circle cuts the slope very slightly, so a large factor of safety is assigned.

At point (241.000, 20.000) under seepage 1,the radius and the corresponding factor of safety are:

14.817	5.709	12.114	5.697	9.410	6.218	6.707	6.881	4.003**********
13.916	5.722	13.015	5.623	11.212	5.855	10.311	6.040	

Lowest factor of safety= 5.623 and occurs at radius = 13.015

At point (256.500, 40.000) under seepage 1,the radius and the corresponding factor of safety are:

35.123	2.266	33.224	2.184	31.324	2.303	29.425	2.673	27.525	3.395
34.490	2.269	33.857	2.255	32.590	2.161	31.957	2.226		

Lowest factor of safety= 2.161 and occurs at radius = 32.590

At point (256.500, 30.000) under seepage 1,the radius and the corresponding factor of safety are:

25.125	2.215	23.368	2.149	21.612	2.218	19.855	2.640	18.098	3.639
24.539	2.215	23.954	2.195	22.783	2.076	22.197	2.140		

Lowest factor of safety= 2.076 and occurs at radius = 22.783

At point (256.500, 20.000) under seepage 1,the radius and the corresponding factor of safety are:

15.127	2.543	13.513	2.523	11.899	2.565	10.285	3.012	8.671	4.131
14.589	2.546	14.051	2.546	12.975	2.405	12.437	2.475		

Lowest factor of safety= 2.405 and occurs at radius = 12.975

At point (272.000, 40.000) under seepage 1,the radius and the corresponding factor of safety are:

35.433	3.191	34.623	3.396	33.813	3.520	33.003	3.210	32.193	5.406
33.543	3.339	33.273	2.895	32.733	3.655	32.463	4.314		

Lowest factor of safety= 2.895 and occurs at radius = 33.273

At point (272.000, 30.000) under seepage 1,the radius and the corresponding factor of safety are:

25.435	3.848	24.768	4.159	24.100	4.568	23.433	3.493	22.765	6.006
23.878	4.691	23.655	4.710	23.210	3.994	22.988	4.749		

Lowest factor of safety= 3.493 and occurs at radius = 23.433

At point (272.000, 20.000) under seepage 1,the radius and the corresponding factor of safety are:

15.437	5.274	14.912	5.821	14.387	6.663	13.863	8.088	13.338	7.128
13.163	10.244	12.988	19.665						

Lowest factor of safety= 5.274 and occurs at radius = 15.437

For piezometric line No. 1

At point (256.500, 30.000) ,RADIUS 22.783
the minimum factor of safety is 2.076

At point (256.500, 30.000) under seepage 1,the radius and the corresponding factor of safety are:

25.125	2.215	23.368	2.149	21.612	2.218	19.855	2.640	18.098	3.639
24.539	2.215	23.954	2.195	22.783	2.076	22.197	2.140		

Lowest factor of safety= 2.076 and occurs at radius = 22.783

At point (266.500, 30.000) under seepage 1,the radius and the corresponding factor of safety are:

25.325	2.504	24.271	2.555	23.217	2.259	22.163	2.856	21.109	4.626
23.920	2.547	23.568	2.499	22.866	2.404	22.515	2.596		

Lowest factor of safety= 2.259 and occurs at radius = 23.217

At point (246.500, 30.000) under seepage 1,the radius and the corresponding factor of safety are:

24.925	3.170	22.465	3.069	20.006	3.234	17.546	3.569	15.087	3.944
24.105	3.165	23.285	3.118	21.646	3.106	20.826	3.161		

Lowest factor of safety= 3.069 and occurs at radius = 22.465

At point (256.500, 40.000) under seepage 1,the radius and the corresponding factor of safety are:

35.123	2.266	33.224	2.184	31.324	2.303	29.425	2.673	27.525	3.395
34.490	2.269	33.857	2.255	32.590	2.161	31.957	2.226		

Lowest factor of safety= 2.161 and occurs at radius = 32.590

At point (256.500, 20.000) under seepage 1,the radius and the corresponding factor of safety are:

15.127	2.543	13.513	2.523	11.899	2.565	10.285	3.012	8.671	4.131
14.589	2.546	14.051	2.546	12.975	2.405	12.437	2.475		

Lowest factor of safety= 2.405 and occurs at radius = 12.975

At point (259.000, 30.000) under seepage 1,the radius and the corresponding factor of safety are:

25.175	2.142	23.594	2.135	22.013	2.170	20.432	2.656	18.851	3.821
24.648	2.149	24.121	2.155	23.067	2.015	22.540	2.082		

Lowest factor of safety= 2.015 and occurs at radius = 23.067

At point (261.500, 30.000) under seepage 1,the radius and the corresponding factor of safety are:

25.225	2.158	23.820	2.196	22.414	2.171	21.009	2.680	19.604	4.057
23.351	2.135	22.883	2.074	21.946	2.295	21.477	2.460		

Lowest factor of safety= 2.074 and occurs at radius = 22.883

At point (259.000, 32.500) under seepage 1,the radius and the corresponding factor of safety are:

27.674	2.137	26.058	2.105	24.441	2.143	22.824	2.621	21.208	3.747
27.136	2.139	26.597	2.136	25.519	1.996	24.980	2.061		

Lowest factor of safety= 1.996 and occurs at radius = 25.519

At point (259.000, 35.000) under seepage 1,the radius and the corresponding factor of safety are:

30.174	2.141	28.522	2.106	26.869	2.135	25.217	2.591	23.565	3.681
29.623	2.143	29.072	2.140	27.971	1.996	27.420	2.057		

Lowest factor of safety= 1.996 and occurs at radius = 27.971

At point (261.500, 32.500) under seepage 1,the radius and the corresponding factor of safety are:

27.724	2.127	26.283	2.151	24.842	2.143	23.402	2.651	21.961	3.975
25.803	2.071	25.323	2.044	24.362	2.268	23.882	2.433		

Lowest factor of safety= 2.044 and occurs at radius = 25.323

At point (256.500, 32.500) under seepage 1,the radius and the corresponding factor of safety are:

27.624	2.212	25.832	2.145	24.040	2.214	22.247	2.603	20.455	3.570
27.027	2.211	26.430	2.194	25.235	2.085	24.637	2.140		

Lowest factor of safety= 2.085 and occurs at radius = 25.235

For piezometric line No. 1

At point (259.000, 32.500) ,RADIUS 25.519
the minimum factor of safety is 1.996

Cross section in distorted scale. Numerals indicate boundary line no.
If there area more than 10 bound. lines, alphabets will then be used. P indicates
Piezometric line. If a portion of Piezometric line coincides with
the ground or another boundary line, only the ground or boundary
line will be shown. X indicates intersection of two boundary
lines. * indicates failure surface.
The minimum factor of safety is 1.996

```
2.000E+01 X+++++++++X+++++++++X+++++++++X+++++++++X++++++++X
          +   +                          +
          +   +        44                 +
          +   +                          +
          +   +                          +
1.800E+01 X   X   +      +      +      +      X
          +   +                          +
          +   +                          +
          +   44444444444444X                  +
          +   +                          +
1.600E+01 X   X   +      +      +      +      X
          +   +                          +
          +   +                          +
          +   +                          +
          +   +        P4                 +
1.400E+01 X   X   +      +      +      +      X
          +   +                          +
          +   +                          +
          +   +                          +
          +   +                          +
1.200E+01 X   X3  +      +P     +      +      X
          +   + 3                        +
          +   + 3                        +
          +   +  33                      +
          +   +   3                      +
1.000E+01 X   X1  + 3    +      +      +      X
          +   + 1   33    *               +
          +   + 1    3    4               +
          +   +  1    3                   +
          +   +   11   3                  +
8.000E+00 X   X   + 1   X +      +      +      X
          +   +    1   2                 +
          +   +    1   2                 +
          +   +     11  2                 +
          +   +      1  X4                +
6.000E+00 X   X   +    1 +  4   +      +      X
          +   +       1   4               +
          +   +       11  44               +
          +   +        1   4              +
          +   +        1   4              +
4.000E+00 X   X   +      +  1   4      +      X
          +   +          11  44          +
          +   +           1   4          +
          +   +           1   4          +
          +   +           1  ˙4          +
2.000E+00 X   X   +      +      11  4  +      X
          +   +           1              +
          +   +           1              +
          +   +           1              +
           +   +                1          +
 .000E+00 X+++++++++X+++++++++X+++++++++X+++++1+++X+++++++++X
0        -8.00E+01  8.00E+01  2.40E+02  4.00E+02  5.60E+02  7.20E+02
```

Shannon, LLC
Shannon Mine No. 4
P-3959
Basin 008A
Stability Analysis

```
10:59:21   02-01-94    Execution of *** REAME ***
A version of the  UNIVERSITY of KENTUCKY  computer model
                  by Dr. Yang H. Huang
Adapted   by      M.B. ENGINEERING PROGRAMS INC.
                  P.O. Box 1453
                  Paintsville, Ky. 41240
   Version 3.02     dated 10-12-1985.
Prepared for : Walker Service Company
               P. O. Box 309 - Plant Street
               Oakman, Alabama 35579

    ***************************************************************
    *  A.L.M.C. AREA 6 MINE P-3699 BASIN 008A STATIC              *
    ***************************************************************
    NUMBER OF BOUNDARY LINES=    4
    NUMBER OF POINTS ON BOUNDARY LINES ARE:     2     2     3     7
    ON BOUNDARY LINE NO. 1,POINT NO. AND COORDINATES ARE:
  1       .000     12.500
 2    500.000       .000

    ON BOUNDARY LINE NO. 2,POINT NO. AND COORDINATES ARE:
  1    200.000      8.500
 2    303.467      5.913

    ON BOUNDARY LINE NO. 3,POINT NO. AND COORDINATES ARE:
  1       .000     13.500
 2    200.000      8.500
 3    235.000     22.500

    ON BOUNDARY LINE NO. 4,POINT NO. AND COORDINATES ARE:
  1       .000     22.500
 2    235.000     22.500
 3    242.500     25.500
 4    254.500     25.500
 5    291.234     10.806

 6    303.467      5.913
 7    500.000      1.000

    LINE NO. AND SLOPE OF EACH SEGMENT ARE:
          1      -.025
          2      -.025
          3      -.025       .400
          4       .000       .400       .000      -.400      -.400      -.025
    NO. OF RADIUS CONTROL ZONES=1  PLOT OR NO PLOT=1  NO. OF SEEPAGE CASES=1
    TOTAL NO. OF LINES AT BOTTOM OF RADIUS CONTROL ZONES ARE:  1

    FOR RAD. CONT. ZONE NO.  1     RADIUS DECREMENT=       .000
    NO. OF CIRCLES=  5     ID NO. FOR FIRST CIRCLE=  1

    LINE NO.=  1     BEGIN PT. NO.=  1     END PT. NO.=  2
    SOIL NO.  COHESION     F. ANGLE     UNIT WT.
        1      230.400       26.560      128.180
        2      100.080       30.540      123.040
        3         .000         .000       62.400
    SEISMIC COEFFICIENT=      .000  MIN. DEPTH OF TALLEST SLICE=      .000
    UNIT WEIGHT OF WATER=    62.400

    THE FACTORS OF SAFETY ARE DETERMINED BY THE SIMPLIFIED BISHOP METHOD
```

```
NSPG =  1 NSRCH =  0 # OF SLICES = 10 NO. OF ADD. RADII= 2

NO. OF POINTS ON WATER TABLE FOR EACH CASE=   6

UNDER SEEPAGE CONDITION 1,POINT NO. AND COORDINATES OF WATER TABLE ARE:
1       .000     22.500
2    235.000     22.500
3    257.867     18.105
4    291.234     10.806
5    303.467      5.913

6    500.000      1.000


POINT1=(   256.000,     47.000)
POINT2=(   256.000,     27.000)
POINT3=(   304.000,     27.000)
NJ=    2 NI=    2
    AUTOMATIC SEARCH WILL FOLLOW AFTER GRID WITH
    XINC=     10.000 AND YINC=     10.000
AT POINT (   256.000,     47.000) UNDER SEEPAGE     1,
THE RADIUS AND THE CORRESPONDING FACTOR OF SAFETY ARE:
        40.887      5.433
        37.020      5.655
        33.153      5.892
        29.286      6.238
        25.419      7.064

    LOWEST FACTOR OF SAFETY=     5.433 AND OCCURS AT RADIUS =     40.887

AT POINT (   256.000,     37.000) UNDER SEEPAGE     1,
THE RADIUS AND THE CORRESPONDING FACTOR OF SAFETY ARE:
        30.890      5.509
        27.032      5.460
        23.173      5.369
        19.315      5.583
        15.456      6.354

        25.746      5.375
        24.459      5.352
        21.887      5.388
        20.601      5.427

    LOWEST FACTOR OF SAFETY=     5.352 AND OCCURS AT RADIUS =     24.459

AT POINT (   256.000,     27.000) UNDER SEEPAGE     1,
THE RADIUS AND THE CORRESPONDING FACTOR OF SAFETY ARE:
        20.893      5.806
        17.105      5.657
        13.316      5.876
         9.527      6.452
         5.739      6.397

        19.631      5.771
        18.368      5.715
        15.842      5.755
        14.579      5.849
         4.476      6.433
```

```
        3.213      7.054

    LOWEST FACTOR OF SAFETY=      5.657 AND OCCURS AT RADIUS =      17.105

AT POINT (   280.000,     47.000) UNDER SEEPAGE      1,
THE RADIUS AND THE CORRESPONDING FACTOR OF SAFETY ARE:
        41.487      1.851
        39.076      1.834
        36.665      1.981
        34.255      2.310
        31.844      3.022

        40.683      1.822
        39.880      1.805
        38.273      1.872
        37.469      1.922

    LOWEST FACTOR OF SAFETY=      1.805 AND OCCURS AT RADIUS =      39.880

AT POINT (   280.000,     37.000) UNDER SEEPAGE      1,
THE RADIUS AND THE CORRESPONDING FACTOR OF SAFETY ARE:
        31.490      1.862
        29.222      1.853
        26.953      2.032
        24.685      2.400
        22.417      3.183

        30.734      1.839
        29.978      1.819
        28.466      1.901
        27.709      1.961

    LOWEST FACTOR OF SAFETY=      1.819 AND OCCURS AT RADIUS =      29.978

AT POINT (   280.000,     27.000) UNDER SEEPAGE      1,
THE RADIUS AND THE CORRESPONDING FACTOR OF SAFETY ARE:
        21.493      2.109
        19.367      2.092
        17.241      2.267
        15.115      2.626
        12.989      3.475

        20.785      2.086
        20.076      2.054
        18.659      2.136
        17.950      2.193

    LOWEST FACTOR OF SAFETY=      2.054 AND OCCURS AT RADIUS =      20.076

AT POINT (   304.000,     47.000) UNDER SEEPAGE      1,
THE RADIUS AND THE CORRESPONDING FACTOR OF SAFETY ARE:
        42.087      2.748
        41.339      2.679
        40.591      2.443
        39.843      3.205
        39.095      5.460

        41.089      2.168
        40.840      2.292
        40.341      2.633
```

```
        40.092      2.877

    LOWEST FACTOR OF SAFETY=      2.168 AND OCCURS AT RADIUS =      41.089

AT POINT (    304.000,     37.000) UNDER SEEPAGE      1,
THE RADIUS AND THE CORRESPONDING FACTOR OF SAFETY ARE:
        32.090      3.236
        31.484      3.287
        30.879      2.678
        30.273      3.568
        29.667      6.242

        31.282      3.185
        31.081      2.502
        30.677      2.900
        30.475      3.186

    LOWEST FACTOR OF SAFETY=      2.502 AND OCCURS AT RADIUS =      31.081

AT POINT (    304.000,     27.000) UNDER SEEPAGE      1,
THE RADIUS AND THE CORRESPONDING FACTOR OF SAFETY ARE:
        22.093      4.186
        21.630      4.446
        21.167      4.185
        20.703      4.300
        20.240      7.809

        21.475      4.500
        21.321      4.475
        21.012      3.434
        20.858      3.806

    LOWEST FACTOR OF SAFETY=      3.434 AND OCCURS AT RADIUS =      21.012


FOR PIEZOMETRIC LINE NO.     1

AT POINT (    280.000,     47.000),RADIUS     39.880
    THE MINIMUM FACTOR OF SAFETY IS      1.805


AT POINT (    280.000,     47.000) UNDER SEEPAGE      1,
THE RADIUS AND THE CORRESPONDING FACTOR OF SAFETY ARE:
        41.487      1.851
        39.076      1.834
        36.665      1.981
        34.255      2.310
        31.844      3.022

        40.683      1.822
        39.880      1.805
        38.273      1.872
        37.469      1.922

    LOWEST FACTOR OF SAFETY=      1.805 AND OCCURS AT RADIUS =      39.880

AT POINT (    290.000,     47.000) UNDER SEEPAGE      1,
THE RADIUS AND THE CORRESPONDING FACTOR OF SAFETY ARE:
        41.737      1.754
        40.019      1.711
```

```
        38.301      1.923
        36.583      2.369
        34.865      3.522

        41.164      1.745
        40.592      1.667
        39.446      1.766
        38.874      1.835

    LOWEST FACTOR OF SAFETY=      1.667 AND OCCURS AT RADIUS =      40.592

AT POINT (   300.000,     47.000) UNDER SEEPAGE      1,
THE RADIUS AND THE CORRESPONDING FACTOR OF SAFETY ARE:
        41.987      2.167
        40.962      1.855
        39.936      2.148
        38.911      2.745
        37.886      4.503

        41.645      2.150
        41.303      2.086
        40.620      1.933
        40.278      2.029

    LOWEST FACTOR OF SAFETY=      1.855 AND OCCURS AT RADIUS =      40.962

AT POINT (   290.000,     57.000) UNDER SEEPAGE      1,
THE RADIUS AND THE CORRESPONDING FACTOR OF SAFETY ARE:
        51.734      1.732
        49.873      1.691
        48.013      1.896
        46.152      2.339
        44.292      3.349

        51.114      1.715
        50.494      1.651
        49.253      1.741
        48.633      1.807

    LOWEST FACTOR OF SAFETY=      1.651 AND OCCURS AT RADIUS =      50.494

AT POINT (   290.000,     67.000) UNDER SEEPAGE      1,
THE RADIUS AND THE CORRESPONDING FACTOR OF SAFETY ARE:
        61.731      1.773
        59.728      1.730
        57.725      1.913
        55.722      2.308
        53.719      3.207

        61.063      1.750
        60.395      1.691
        59.060      1.780
        58.393      1.838

    LOWEST FACTOR OF SAFETY=      1.691 AND OCCURS AT RADIUS =      60.395

AT POINT (   300.000,     57.000) UNDER SEEPAGE      1,
THE RADIUS AND THE CORRESPONDING FACTOR OF SAFETY ARE:
        51.984      2.042
        50.816      1.802
```

```
        49.648      2.090
        48.481      2.650
        47.313      4.269

        51.595      2.015
        51.205      1.934
        50.427      1.879
        50.038      1.973

    LOWEST FACTOR OF SAFETY=     1.802 AND OCCURS AT RADIUS =     50.816

AT POINT (   280.000,    57.000) UNDER SEEPAGE     1,
THE RADIUS AND THE CORRESPONDING FACTOR OF SAFETY ARE:
        51.484      1.913
        48.931      1.899
        46.377      2.062
        43.824      2.369
        41.271      2.894

        50.633      1.882
        49.782      1.868
        48.080      1.943
        47.228      2.000

    LOWEST FACTOR OF SAFETY=     1.868 AND OCCURS AT RADIUS =     49.782

AT POINT (   292.500,    57.000) UNDER SEEPAGE     1,
THE RADIUS AND THE CORRESPONDING FACTOR OF SAFETY ARE:
        51.796      1.747
        50.109      1.689
        48.422      1.922
        46.735      2.379
        45.047      3.522

        51.234      1.735
        50.671      1.643
        49.547      1.749
        48.984      1.826

    LOWEST FACTOR OF SAFETY=     1.643 AND OCCURS AT RADIUS =     50.671

AT POINT (   295.000,    57.000) UNDER SEEPAGE     1,
THE RADIUS AND THE CORRESPONDING FACTOR OF SAFETY ARE:
        51.859      1.793
        50.345      1.711
        48.831      1.957
        47.317      2.440
        45.803      3.737

        51.354      1.778
        50.849      1.657
        49.840      1.777
        49.335      1.857

    LOWEST FACTOR OF SAFETY=     1.657 AND OCCURS AT RADIUS =     50.849

AT POINT (   292.500,    59.500) UNDER SEEPAGE     1,
THE RADIUS AND THE CORRESPONDING FACTOR OF SAFETY ARE:
        54.296      1.744
        52.573      1.687
```

```
        50.850      1.915
        49.127      2.370
        47.404      3.478

        53.721      1.731
        53.147      1.643
        51.998      1.744
        51.424      1.819

    LOWEST FACTOR OF SAFETY=     1.643 AND OCCURS AT RADIUS =     53.147

AT POINT (   292.500,    54.500) UNDER SEEPAGE     1,
THE RADIUS AND THE CORRESPONDING FACTOR OF SAFETY ARE:
        49.297      1.753
        47.645      1.696
        45.994      1.926
        44.342      2.389
        42.691      3.569

        48.747      1.742
        48.196      1.647
        47.095      1.756
        46.544      1.831

    LOWEST FACTOR OF SAFETY=     1.647 AND OCCURS AT RADIUS =     48.196


FOR PIEZOMETRIC LINE NO.    1

AT POINT (   292.500,    57.000),RADIUS    50.671
    THE MINIMUM FACTOR OF SAFETY IS     1.643
```

CROSS SECTION IN DISTORTED SCALE
NUMERALS INDICATE BOUNDARY LINE NO. IF THERE ARE MORE THAN 10 BOUND. LINES,ALPHABETS WILL THEN BE USED. P INDICATES PIZOMETRIC LINE. IF A PORTION OF PIEZOMETRIC LINE COINCIDES WITH THE GROUND OR ANOTHER BOUNDARY LINE,ONLY THE GROUND OR BOUNDARY LINE WILL BE SHOWN. X INDICATES INTERSECTION OF TWO BOUNDARY LINES. * INDICATES FAILURE SURFACE.
THE MINIMUM FACTOR OF SAFETY IS 1.643

```
3.600E+01 X+++++++++X+++++++++X+++++++++X+++++++++X+++++++++X
          +    +                                            +
          +    +                                            +
          +    +                                            +
          +    +                                            +
3.200E+01 X    X    +         +         +         +         X
          +    +                                            +
          +    +                                            +
          +    +                                            +
          +    +                                            +
2.800E+01 X    X    +         +         +         +         X
          +    +                                            +
          +    +                                            +
          +    +              44                            +
          +    +              44                            +
2.400E+01 X    X    +         44        +         +         X
          +    +              44                            +
          +    444444444444444X4                            +
          +    +             3P4                            +
          +    +             3P4                            +
2.000E+01 X    X    +        3P4        +         +         X
          +    +             3P4                            +
          +    +             3 P4                           +
          +    +             3 P4                           +
          +    +             3 P4                           +
1.600E+01 X    X    +        3+P4       +         +         X
          +    +            3  P4                           +
          +    +            3   4                           +
          +    333          3   4                           +
          +    11 33        3   4                           +
1.200E+01 X    X 11 33      3 + 4       +         +         X
          +    +   11 33    3   *4                          +
          +    +     11 33  3   *4                          +
          +    +       11 333   *4                          +
          +    +         11 X2  *4                          +
8.000E+00 X    X    +      11 2  4      +         +         X
          +    +             11224*                        +
          +    +               11X                         +
          +    +                 1X4                       +
          +    +                   1X4                     +
4.000E+00 X    X    +         +      1X4+         +         X
          +    +                        1X4                +
          +    +                          1X4              +
          +    +                            1X4            +
          +    +                              14           +
 .000E+00 X+++++++++X+++++++++X+++++++++X+++++1+++X+++++++++X
          +    +                                            +
          +    +                                            +
          +    +                                            +
          +    +                                            +
-4.000E+00 X+++++++++X+++++++++X+++++++++X+++++++++X+++++++++X
```

```
          -8.00E+01  8.00E+01  2.40E+02  4.00E+02  5.60E+02  7.20E+02
....RUN COMPLETE....
```

Shannon, LLC
Shannon Mine No. 4
P-3959
Basin 009
Stability Analysis

```
10:14:21   02-03-94    Execution of *** REAME ***
A version of the  UNIVERSITY of KENTUCKY  computer model
                  by Dr. Yang H. Huang
Adapted   by      M.B. ENGINEERING PROGRAMS INC.
                  P.O. Box 1453
                  Paintsville, Ky. 41240
   Version 3.02     dated 10-12-1985.
Prepared for : Walker Service Company
               P. O. Box 309 - Plant Street
               Oakman, Alabama 35579

    ***************************************************************
    *  A.L.M.C. AREA 6 MINE P-3699 BASIN 009P STATIC              *
    ***************************************************************
    NUMBER OF BOUNDARY LINES=    4
    NUMBER OF POINTS ON BOUNDARY LINES ARE:     2     2     3     7
    ON BOUNDARY LINE NO. 1,POINT NO. AND COORDINATES ARE:
  1       .000     17.500
  2    500.000       .000

    ON BOUNDARY LINE NO. 2,POINT NO. AND COORDINATES ARE:
  1    200.000     11.500
  2    325.479      7.108

    ON BOUNDARY LINE NO. 3,POINT NO. AND COORDINATES ARE:
  1       .000     18.500
  2    200.000     11.500
  3    243.500     28.900

    ON BOUNDARY LINE NO. 4,POINT NO. AND COORDINATES ARE:
  1       .000     28.900
  2    243.500     28.900
  3    251.250     32.000
  4    263.250     32.000
  5    309.136     13.646

  6    325.479      7.108
  7    500.000      1.000

    LINE NO. AND SLOPE OF EACH SEGMENT ARE:
          1      -.035
          2      -.035
          3      -.035       .400
          4       .000       .400       .000      -.400      -.400      -.035
    NO. OF RADIUS CONTROL ZONES=1  PLOT OR NO PLOT=1  NO. OF SEEPAGE CASES=1
    TOTAL NO. OF LINES AT BOTTOM OF RADIUS CONTROL ZONES ARE:  1

    FOR RAD. CONT. ZONE NO.  1     RADIUS DECREMENT=       .000
    NO. OF CIRCLES=  5     ID NO. FOR FIRST CIRCLE=  1

    LINE NO.=  1     BEGIN PT. NO.=  1     END PT. NO.=  2
    SOIL NO.  COHESION     F. ANGLE     UNIT WT.
        1      180.000       30.540      135.960
        2      100.800       30.540      123.040
        3         .000         .000       62.400
    SEISMIC COEFFICIENT=       .000  MIN. DEPTH OF TALLEST SLICE=       .000
    UNIT WEIGHT OF WATER=    62.400

    THE FACTORS OF SAFETY ARE DETERMINED BY THE SIMPLIFIED BISHOP METHOD
```

```
NSPG =  1 NSRCH =  0 # OF SLICES = 10 NO. OF ADD. RADII= 2

NO. OF POINTS ON WATER TABLE FOR EACH CASE=   6

UNDER SEEPAGE CONDITION 1,POINT NO. AND COORDINATES OF WATER TABLE ARE:
1       .000     28.900
2    243.500     28.900
3    269.793     23.016
4    309.136     13.646
5    325.479      7.108

6    500.000      1.000


POINT1=(   264.000,     53.000)
POINT2=(   264.000,     33.000)
POINT3=(   326.000,     33.000)
NJ=    2 NI=    2
    AUTOMATIC SEARCH WILL FOLLOW AFTER GRID WITH
    XINC=    10.000 AND YINC=    10.000
AT POINT (   264.000,     53.000) UNDER SEEPAGE     1,
THE RADIUS AND THE CORRESPONDING FACTOR OF SAFETY ARE:
        44.713      6.083
        39.973      6.136
        35.233      6.479
        30.493      6.821
        25.753      7.205

    LOWEST FACTOR OF SAFETY=     6.083 AND OCCURS AT RADIUS =     44.713

AT POINT (   264.000,     43.000) UNDER SEEPAGE     1,
THE RADIUS AND THE CORRESPONDING FACTOR OF SAFETY ARE:
        34.719      6.335
        29.980      6.237
        25.241      6.137
        20.503      6.125
        15.764      6.647

        23.662      6.089
        22.082      6.102
        18.923      6.221
        17.344      6.285

    LOWEST FACTOR OF SAFETY=     6.089 AND OCCURS AT RADIUS =     23.662

AT POINT (   264.000,     33.000) UNDER SEEPAGE     1,
THE RADIUS AND THE CORRESPONDING FACTOR OF SAFETY ARE:
        24.725      7.142
        20.021      6.641
        15.318      6.595
        10.614      7.284
         5.911      7.834

        18.453      6.581
        16.886      6.529
        13.750      6.823
        12.182      6.920

    LOWEST FACTOR OF SAFETY=     6.529 AND OCCURS AT RADIUS =     16.886
```

AT POINT (295.000, 53.000) UNDER SEEPAGE 1,
THE RADIUS AND THE CORRESPONDING FACTOR OF SAFETY ARE:

45.797	1.728
42.895	1.692
39.994	1.833
37.092	2.142
34.191	2.810
44.830	1.675
43.863	1.671
41.928	1.726
40.961	1.774

LOWEST FACTOR OF SAFETY= 1.671 AND OCCURS AT RADIUS = 43.863

AT POINT (295.000, 43.000) UNDER SEEPAGE 1,
THE RADIUS AND THE CORRESPONDING FACTOR OF SAFETY ARE:

35.803	1.777
33.043	1.753
30.284	1.910
27.524	2.224
24.764	2.940
34.883	1.730
33.963	1.724
32.124	1.794
31.204	1.844

LOWEST FACTOR OF SAFETY= 1.724 AND OCCURS AT RADIUS = 33.963

AT POINT (295.000, 33.000) UNDER SEEPAGE 1,
THE RADIUS AND THE CORRESPONDING FACTOR OF SAFETY ARE:

25.809	1.997
23.191	1.973
20.573	2.108
17.956	2.412
15.338	3.175
24.937	1.957
24.064	1.947
22.319	2.007
21.446	2.050

LOWEST FACTOR OF SAFETY= 1.947 AND OCCURS AT RADIUS = 24.064

AT POINT (326.000, 53.000) UNDER SEEPAGE 1,
THE RADIUS AND THE CORRESPONDING FACTOR OF SAFETY ARE:

46.881	2.295
46.066	2.206
45.250	2.235
44.434	2.909
43.618	4.929
46.609	2.295
46.337	2.276
45.794	1.988
45.522	2.099

LOWEST FACTOR OF SAFETY= 1.988 AND OCCURS AT RADIUS = 45.794

AT POINT (326.000, 43.000) UNDER SEEPAGE 1,
THE RADIUS AND THE CORRESPONDING FACTOR OF SAFETY ARE:

36.887	2.617
36.213	2.614
35.540	2.428
34.866	3.218
34.192	5.621
35.989	2.482
35.764	2.273
35.315	2.625
35.090	2.878

LOWEST FACTOR OF SAFETY= 2.273 AND OCCURS AT RADIUS = 35.764

AT POINT (326.000, 33.000) UNDER SEEPAGE 1,
THE RADIUS AND THE CORRESPONDING FACTOR OF SAFETY ARE:

26.894	3.185
26.361	3.326
25.829	2.821
25.297	3.835
24.765	6.918
26.184	3.332
26.007	3.232
25.652	3.070
25.475	3.397

LOWEST FACTOR OF SAFETY= 2.821 AND OCCURS AT RADIUS = 25.829

FOR PIEZOMETRIC LINE NO. 1

AT POINT (295.000, 53.000),RADIUS 43.863
THE MINIMUM FACTOR OF SAFETY IS 1.671

AT POINT (295.000, 53.000) UNDER SEEPAGE 1,
THE RADIUS AND THE CORRESPONDING FACTOR OF SAFETY ARE:

45.797	1.728
42.895	1.692
39.994	1.833
37.092	2.142
34.191	2.810
44.830	1.675
43.863	1.671
41.928	1.726
40.961	1.774

LOWEST FACTOR OF SAFETY= 1.671 AND OCCURS AT RADIUS = 43.863

AT POINT (305.000, 53.000) UNDER SEEPAGE 1,
THE RADIUS AND THE CORRESPONDING FACTOR OF SAFETY ARE:

46.147	1.599
43.918	1.592
41.689	1.764
39.461	2.137
37.232	3.108

```
        45.404      1.576
        44.661      1.554
        43.175      1.640
        42.432      1.697

    LOWEST FACTOR OF SAFETY=      1.554 AND OCCURS AT RADIUS =      44.661

AT POINT (   315.000,     53.000) UNDER SEEPAGE      1,
THE RADIUS AND THE CORRESPONDING FACTOR OF SAFETY ARE:
        46.497      1.647
        44.941      1.606
        43.385      1.809
        41.829      2.235
        40.273      3.502

        45.978      1.638
        45.459      1.559
        44.422      1.663
        43.903      1.729

    LOWEST FACTOR OF SAFETY=      1.559 AND OCCURS AT RADIUS =      45.459

AT POINT (   305.000,     63.000) UNDER SEEPAGE      1,
THE RADIUS AND THE CORRESPONDING FACTOR OF SAFETY ARE:
        56.141      1.574
        53.770      1.568
        51.400      1.737
        49.029      2.112
        46.659      2.992

        55.350      1.547
        54.560      1.531
        52.980      1.614
        52.190      1.667

    LOWEST FACTOR OF SAFETY=      1.531 AND OCCURS AT RADIUS =      54.560

AT POINT (   305.000,     73.000) UNDER SEEPAGE      1,
THE RADIUS AND THE CORRESPONDING FACTOR OF SAFETY ARE:
        66.135      1.597
        63.622      1.581
        61.110      1.735
        58.598      2.099
        56.085      2.895

        65.297      1.563
        64.460      1.551
        62.785      1.624
        61.947      1.673

    LOWEST FACTOR OF SAFETY=      1.551 AND OCCURS AT RADIUS =      64.460

AT POINT (   315.000,     63.000) UNDER SEEPAGE      1,
THE RADIUS AND THE CORRESPONDING FACTOR OF SAFETY ARE:
        56.490      1.606
        54.793      1.584
        53.095      1.786
        51.397      2.208
        49.700      3.440
```

```
        55.925      1.597
        55.359      1.541
        54.227      1.638
        53.661      1.703

    LOWEST FACTOR OF SAFETY=      1.541 AND OCCURS AT RADIUS =      55.359

AT POINT (   295.000,     63.000) UNDER SEEPAGE      1,
THE RADIUS AND THE CORRESPONDING FACTOR OF SAFETY ARE:
        55.791      1.747
        52.748      1.720
        49.704      1.849
        46.661      2.120
        43.618      2.717

        54.776      1.684
        53.762      1.696
        51.733      1.754
        50.719      1.798

    LOWEST FACTOR OF SAFETY=      1.684 AND OCCURS AT RADIUS =      54.776

AT POINT (   307.500,     63.000) UNDER SEEPAGE      1,
THE RADIUS AND THE CORRESPONDING FACTOR OF SAFETY ARE:
        56.228      1.564
        54.026      1.563
        51.823      1.740
        49.621      2.121
        47.419      3.090

        55.494      1.542
        54.760      1.522
        53.292      1.609
        52.558      1.666

    LOWEST FACTOR OF SAFETY=      1.522 AND OCCURS AT RADIUS =      54.760

AT POINT (   310.000,     63.000) UNDER SEEPAGE      1,
THE RADIUS AND THE CORRESPONDING FACTOR OF SAFETY ARE:
        56.316      1.565
        54.281      1.565
        52.247      1.747
        50.213      2.138
        48.179      3.207

    LOWEST FACTOR OF SAFETY=      1.565 AND OCCURS AT RADIUS =      56.316

AT POINT (   307.500,     65.500) UNDER SEEPAGE      1,
THE RADIUS AND THE CORRESPONDING FACTOR OF SAFETY ARE:
        58.727      1.561
        56.489      1.560
        54.251      1.737
        52.013      2.118
        49.776      3.062

        57.981      1.539
        57.235      1.519
        55.743      1.604
        54.997      1.662
```

LOWEST FACTOR OF SAFETY= 1.519 AND OCCURS AT RADIUS = 57.235

AT POINT (307.500, 68.000) UNDER SEEPAGE 1,
THE RADIUS AND THE CORRESPONDING FACTOR OF SAFETY ARE:

61.225	1.561
58.952	1.558
56.679	1.734
54.405	2.116
52.132	3.035
60.467	1.537
59.710	1.519
58.194	1.601
57.436	1.658

LOWEST FACTOR OF SAFETY= 1.519 AND OCCURS AT RADIUS = 59.710

AT POINT (307.500, 70.500) UNDER SEEPAGE 1,
THE RADIUS AND THE CORRESPONDING FACTOR OF SAFETY ARE:

63.723	1.562
61.415	1.559
59.106	1.730
56.798	2.114
54.489	3.008
62.954	1.538
62.184	1.521
60.645	1.602
59.876	1.656

LOWEST FACTOR OF SAFETY= 1.521 AND OCCURS AT RADIUS = 62.184

AT POINT (310.000, 68.000) UNDER SEEPAGE 1,
THE RADIUS AND THE CORRESPONDING FACTOR OF SAFETY ARE:

61.312	1.555
59.207	1.555
57.102	1.741
54.997	2.132
52.892	3.144
60.611	1.539
59.909	1.516
58.506	1.603
57.804	1.664

LOWEST FACTOR OF SAFETY= 1.516 AND OCCURS AT RADIUS = 59.909

AT POINT (312.500, 68.000) UNDER SEEPAGE 1,
THE RADIUS AND THE CORRESPONDING FACTOR OF SAFETY ARE:

61.400	1.565
59.463	1.562
57.526	1.756
55.590	2.159
53.653	3.274
60.754	1.557
60.109	1.520
58.818	1.613
58.172	1.676

LOWEST FACTOR OF SAFETY= 1.520 AND OCCURS AT RADIUS = 60.109

AT POINT (310.000, 70.500) UNDER SEEPAGE 1,
RADIUS AND THE CORRESPONDING FACTOR OF SAFETY ARE:

63.811	1.554
61.670	1.553
59.530	1.739
57.390	2.130
55.249	3.114
63.097	1.536
62.384	1.514
60.957	1.599
60.243	1.661

LOWEST FACTOR OF SAFETY= 1.514 AND OCCURS AT RADIUS = 62.384

AT POINT (310.000, 73.000) UNDER SEEPAGE 1,
THE RADIUS AND THE CORRESPONDING FACTOR OF SAFETY ARE:

66.309	1.554
64.133	1.553
61.958	1.737
59.782	2.128
57.606	3.086
65.584	1.536
64.859	1.514
63.408	1.598
62.683	1.657

LOWEST FACTOR OF SAFETY= 1.514 AND OCCURS AT RADIUS = 64.859

AT POINT (312.500, 70.500) UNDER SEEPAGE 1,
THE RADIUS AND THE CORRESPONDING FACTOR OF SAFETY ARE:

63.898	1.559
61.926	1.558
59.954	1.753
57.982	2.156
56.009	3.240
63.241	1.550
62.584	1.516
61.269	1.609
60.611	1.673

LOWEST FACTOR OF SAFETY= 1.516 AND OCCURS AT RADIUS = 62.584

AT POINT (307.500, 70.500) UNDER SEEPAGE 1,
THE RADIUS AND THE CORRESPONDING FACTOR OF SAFETY ARE:

63.723	1.562
61.415	1.559
59.106	1.730
56.798	2.114
54.489	3.008
62.954	1.538
62.184	1.521
60.645	1.602
59.876	1.656

LOWEST FACTOR OF SAFETY= 1.521 AND OCCURS AT RADIUS = 62.184

PIEZOMETRIC LINE NO. 1

AT POINT (310.000, 70.500),RADIUS 62.384
THE MINIMUM FACTOR OF SAFETY IS 1.514

CROSS SECTION IN DISTORTED SCALE
NUMERALS INDICATE BOUNDARY LINE NO. IF THERE ARE MORE THAN 10 BOUND. LINES,ALPHABETS WILL THEN BE USED. P INDICATES PIZOMETRIC LINE. IF A PORTION OF PIEZOMETRIC LINE COINCIDES WITH THE GROUND OR ANOTHER BOUNDARY LINE,ONLY THE GROUND OR BOUNDARY LINE WILL BE SHOWN. X INDICATES INTERSECTION OF TWO BOUNDARY LINES. * INDICATES FAILURE SURFACE.
THE MINIMUM FACTOR OF SAFETY IS 1.514

```
3.600E+01 X+++++++++X+++++++++X+++++++++X+++++++++X+++++++++X
          +    +                                            +
          +    +                                            +
          +    +                                            +
          +    +                                            +
3.200E+01 X    X    +         +4        +         +         X
          +    +              44                           +
          +    +              44                           +
          +    +              44                           +
          +    444444444444444X4                            +
2.800E+01 X    X    +        3P4*       +         +         X
          +    +             3P4*                           +
          +    +             3P4*                           +
          +    +             3 P4                           +
          +    +             3 P4                           +
2.400E+01 X    X    +        3+P4       +         +         X
          +    +             3  4                           +
          +    +             3  4                           +
          +    +             3  4                           +
          +    +             3  4                           +
2.000E+01 X    X    +        3+ 4       +         +         X
          +    +            3   P4                          +
          +    33           3   *4                          +
          +    113          3   *4                          +
          +    + 133        3   *4                          +
1.600E+01 X    X  113       3 +  4       +         +         X
          +    +    133     3    4                          +
          +    +     113    3    4                          +
          +    +       133  3    *4                         +
          +    +        1 3 3    *4                         +
1.200E+01 X    X    +    1133 +  *4       +         +         X
          +    +           1X2   *4                         +
          +    +            112  *4                         +
          +    +              122 4                         +
          +    +               1 24*                        +
8.000E+00 X    X    +         + 11X      +         +         X
          +    +                  1X4                       +
          +    +                   114                      +
          +    +                     144                    +
          +    +                      1 4                   +
4.000E+00 X    X    +         +         114        +         X
          +    +                           144               +
          +    +                            114              +
          +    +                              14             +
          +    +                               14            +
 .000E+00 X+++++++++X+++++++++X+++++++++X+++++1+++X+++++++++X
          +    +                                            +
          +    +                                            +
          +    +                                            +
          +    +                                            +
-4.000E+00 X+++++++++X+++++++++X+++++++++X+++++++++X+++++++++X
```

```
          -8.00E+01  8.00E+01  2.40E+02  4.00E+02  5.60E+02  7.20E+02
....RUN COMPLETE....
```