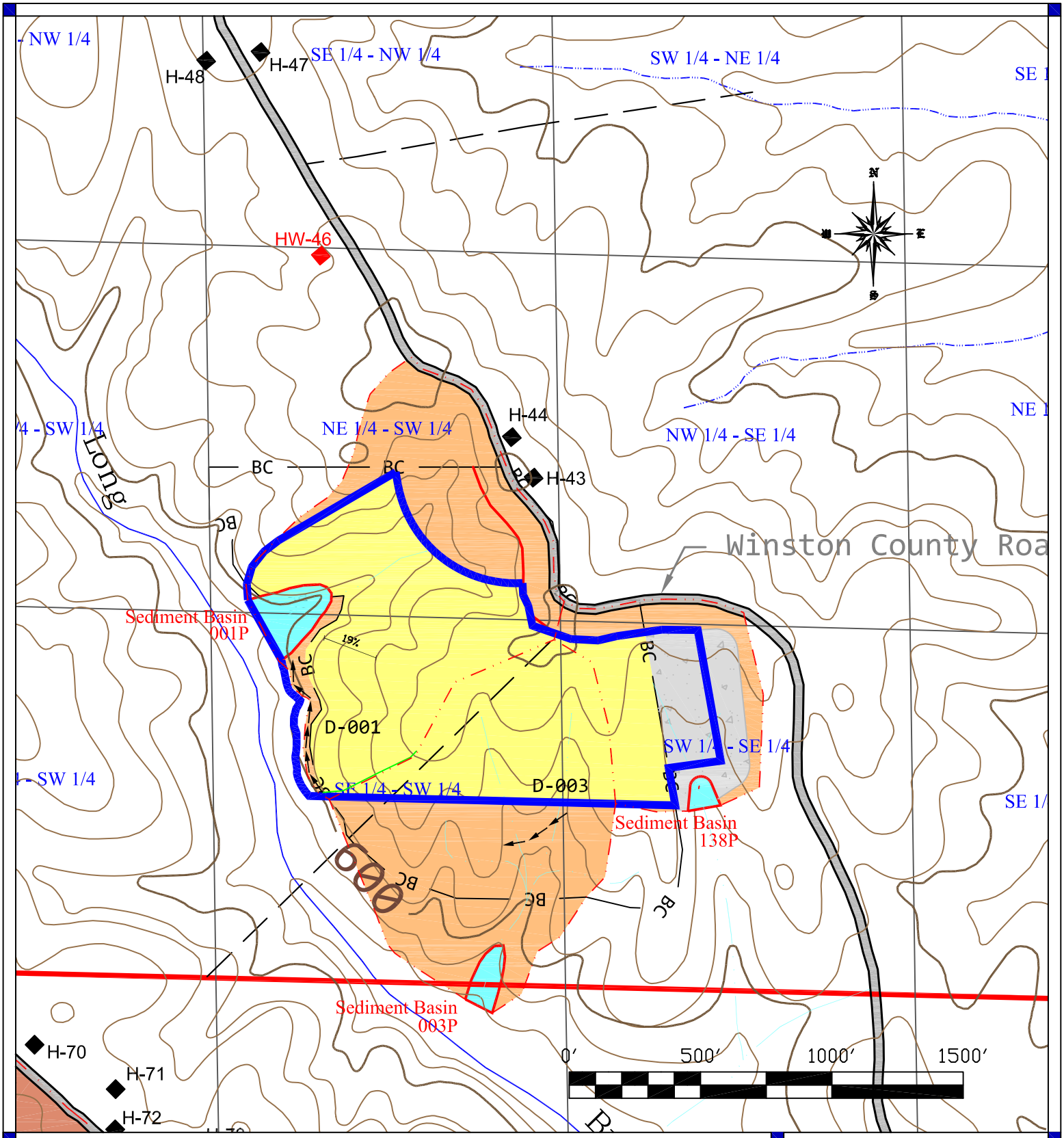

DRAWN BY:
J.R.W.
04/04/2012

APPROVED BY:
J.D.M.
04/04/2012

SCALE:
1" = 500'

SHEET:
1 OF 1

BIRMINGHAM COAL & COKE, INC
OLD UNION NO. 2 MINE

WATERSHED MAP LEGEND

- PUBLIC ROAD
- SEDIMENT BASIN
- DRAINAGE DIVIDE
- DIVERSION DITCH
- DRAINAGE COURSE
- PERMIT BOUNDARY
- PREVIOUSLY DISTURBED, CN 75
- FOREST, GOOD COVER, CN 70
- PASTURE, GOOD COVER, CN 74
- GRADE & BARE, CN 81

DSM
DESIGN GROUP, LLC
ENGINEERING / SURVEYING
1400 VIKING DRIVE
JASPER, ALABAMA 35501
TELEPHONE: (205) 221-6262

SEDIMENT BASIN 138

UPSTREAM TOE ELEV.: 630.0'

SEDIMENT REMOVAL ELEV.: 633.07'

PRIMARY SPILLWAY ELEV.: 635.10'

EMERGENCY SPILLWAY ELEV.: 636.90'

**MAXIMUM WATER ELEV.: 636.82'

TOP OF DAM ELEV.: 638.57' DESIGN

TOP OF DAM ELEV.: 639.00' CONSTRUCT.

PRIMARY SPILLWAY: 140' - 12" C.M. PIPE

EMERGENCY SPILLWAY: 12' WIDE TRAPEZOIDAL CHANNEL, GRASS LINED

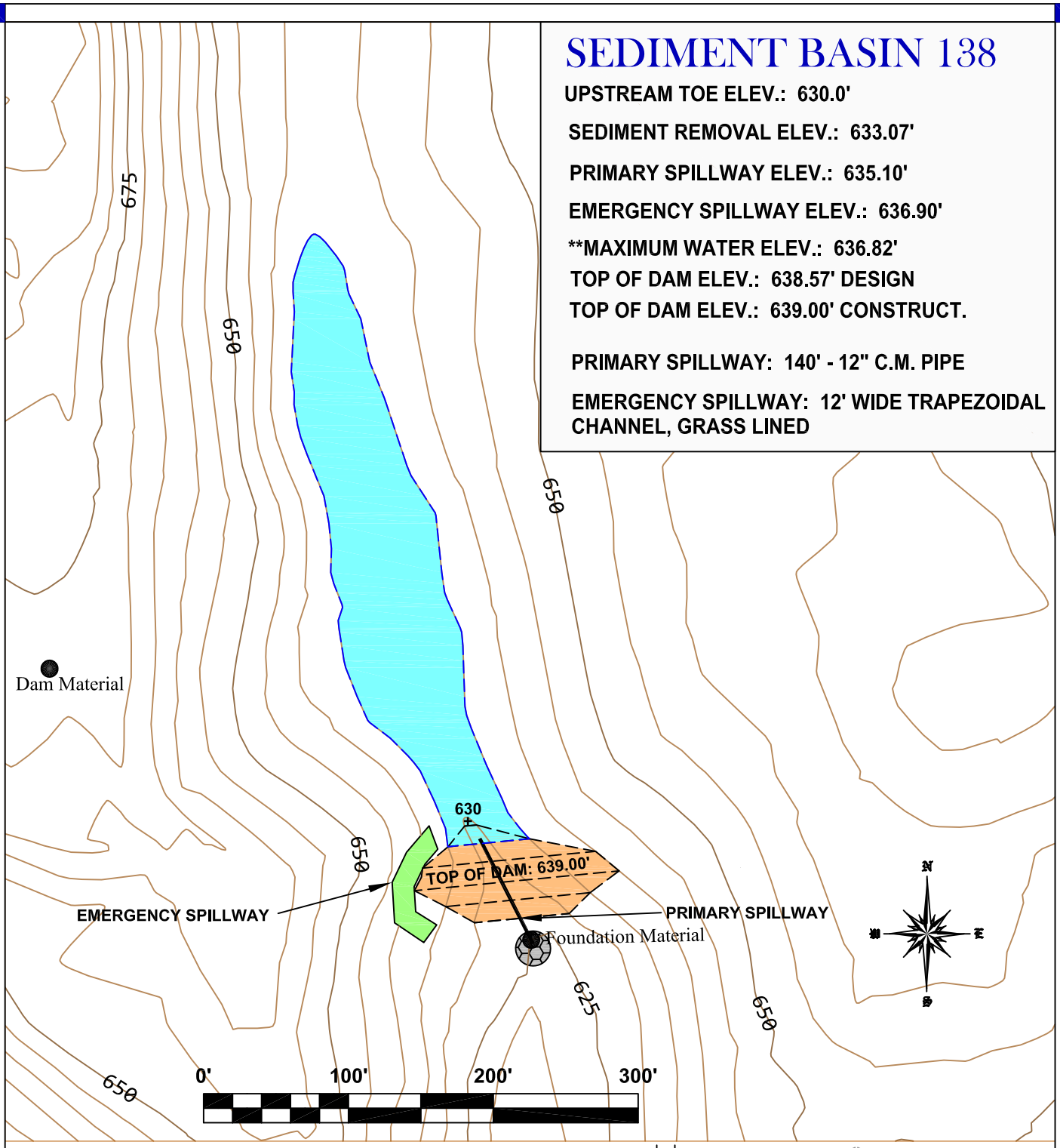

MAJOR INLFOW / DIVERSION

NORMAL POOL AREA

ENERGY DISSIPATER (CLASS II SANDSTONE RIPRAP)

** 25 YEAR - 6 HOUR PRECIPITATION EVENT.

Birmingham Coal & Coke, Inc
Old Union #2 Mine, P-3962
Basin 138 Plan View Drawing

SCALE:	SHEET:	LYNN & POPLAR SPRINGS USGS QUADRANGLES
1" = 100'	1 OF 1	

DSM
DESIGN GROUP, LLC
ENGINEERING / SURVEYING
1400 VIKING DRIVE
JASPER, ALABAMA 35501
TELEPHONE: (205) 221-6262

EMBANKMENT CROSS-SECTION

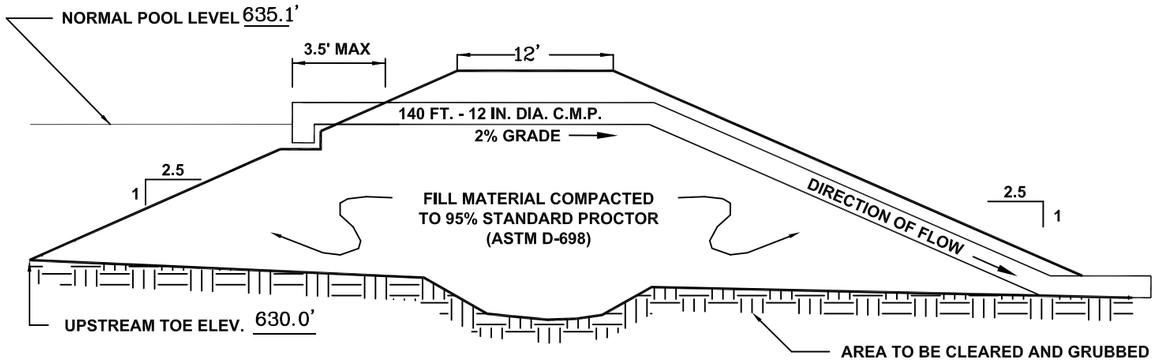

IMPOUNDMENT PROFILE

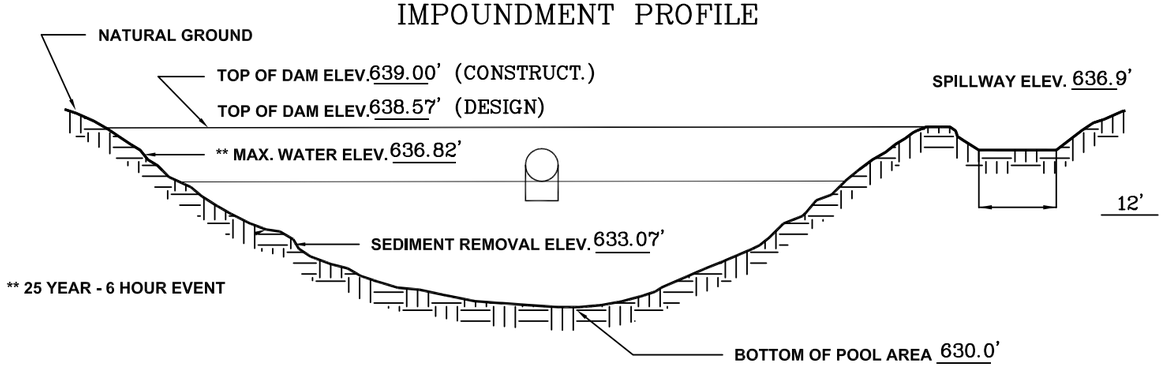

EMERGENCY SPILLWAY

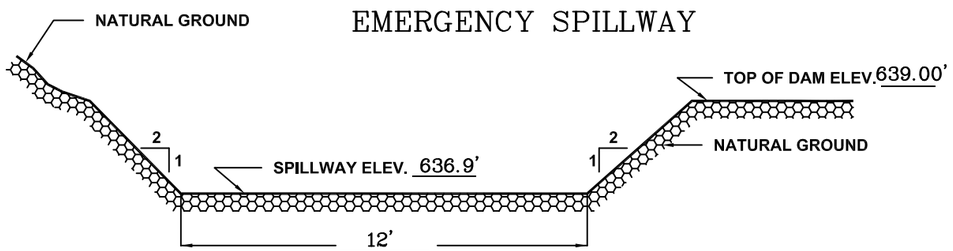

EMERGENCY SPILLWAY TO BE GRASS LINED

MAXIMUM SPILLWAY GRADIENT 2.0 % (CONTROL SECTION)
MAXIMUM SPILLWAY GRADIENT 5.0 % (TAIL DITCH SECTION)
MINIMUM SPILLWAY GRADIENT 2.0 % (TAIL DITCH SECTION)

COMPANY: BIRMINGHAM COAL & COKE CO., INC.

MINE NAME: OLD UNION #2 MINE

PERMIT #: P-3962

BASIN I.D. #: BASIN 138

KEY BASIN PARAMETERS

DRAINAGE AREA	ACRES	10.83	
DISTURBED AREA	ACRES	3.28	
SEDIMENT STORAGE	AC.FT.	0.33	
DETENTION STORAGE	AC.FT.	0.90	
PERMANENT POOL CAPACITY	AC.FT.	1.23	
* TOTAL BASIN STORAGE CAPACITY .	AC.FT.	2.46	* 10 YEAR - 24 HOUR EVENT
** PEAK INFLOW	C.F.S.	25.16	** 25 YEAR - 6 HOUR EVENT
** PEAK OUTFLOW	C.F.S.	2.87	** 25 YEAR - 6 HOUR EVENT

STORAGE COMPUTATION

Elevation (feet)	Area (acres)	Avg. Area (acres)	Interval (feet)	Storage (ac. - ft)	Acc. Storage (ac. - ft)
630.0	0.007				0.0000
		0.316	5.0	1.582	
635.0	0.626				1.582
		1.083	5.0	5.415	
640.0	1.540				6.997
		2.165	5.0	10.825	
645.0	2.790				17.822
		3.395	5.0	16.975	
650.0	4.000				34.797

Birmingham Coal & Coke, Inc
Old Union Mine, P-3962
Basin 138

SCALE:	DATE:	DRAWN BY:	APPROVED BY:
1" = 100'	04/05/2012	JWR	J.D.M

DSM
DESIGN GROUP, LLC
ENGINEERING / SURVEYING
1400 VIKING DRIVE
JASPER, ALABAMA 35501
TELEPHONE: (205) 221-6262