CEDAR LAKE MINING, INC

LITTLE SPRING CREEK EAST MINE, P-3968

SEDIMENT BASIN 001

DETAILED DESIGN PLANS

Submitted by:

TASK Engineering Management Inc.
P. O. Box 660548
Birmingham, Alabama 35266
Telephone: (205) 978-5070
Email: jw-task@charter.net

STATE OF ALABAMA

SURFACE MINING COMMISSION

P.O. BOX 2390 - JASPER, ALABAMA 35502-2390
(205) 221-4130 • FAX: (205) 221-5077

July 18, 2012

Mr. Otis R. Robison, Jr.
Cedar Lake Mining, Inc.
2600 Warrior Jasper Road
Warrior, AL 35180

RE: Little Spring Creek East Mine, P-3968
Design Plans - Sedimentation Ponds 001, 002, 003 and 004

Dear Mr. Robison:

The design plans submitted for proposed sedimentation ponds 001, 002, 003 and 004 are hereby approved. If there are any questions, please do not hesitate to call.

Sincerely,

Gary J. Heaton

Gary J. Heaton
P.E.

/kb

cc: Task Engineering Management, Inc.

TASK ENGINEERING MANAGEMENT INC.
PO BOX 660548
BIRMINGHAM, ALABAMA 35266
(205) 978-5070

June 11, 2012

Mr. Gary J. Heaton, P.E.
Alabama Surface Mining Commission
PO Box 2390
Jasper, Alabama 35502-2390

Re: Cedar Lake Mining, Inc.
Little Spring Creek East Mine - P-3968
Dear Mr. Heaton:

I hereby certify the enclosed detailed design plans for Sediment Basin 001 for the above referenced mine are in accordance with the Regulations of the Alabama Surface Mining Commission as adopted by Act 81-435 of December 18, 1981 and as amended to data and that the information used in the enclosed basin design plans is true and correct to the best of my knowledge and belief.

If you have any questions or need additional information, please do not hesitate to call us at (205) 978-5070.

Sincerely,

Jerry W. Williams, P.E.
Alabama Reg. No. 12739

ALABAMA REGISTERED No. 12739 PROFESSIONAL ENGINEER JERRY W. WILLIAMS

SEDIMENT BASIN CONSTRUCTION SPECIFICATIONS

Sediment basins (temporary or permanent) will be designed and constructed using the following as minimum specifications:

1. EMBANKMENT REQUIREMENTS

A) The minimum width of the top of the embankment will under no circumstance be less than twelve (12) feet.

B) The embankment will have a minimum front and back slope no steeper than the slopes listed on the detailed design sheet.

C) The foundation area of the embankment will be cleared and grubbed of all organic matter with no surface slope steeper than one (1) horizontal to one (1) vertical. The entire wet area as measured from the upstream toe of the embankment to the normal pool level, will be cleared of trees and large bush.

D) A core will be constructed in a cutoff trench along the centerline of the embankment. The cutoff trench will be of suitable depth and width to attain relatively impervious material.

E) The embankment construction material will be free of sod, roots, stumps, rocks, etc., which exceed six (6) inches in diameter. The embankment material will be placed in layers of twelve (12) inches or less and compacted to ninety-five (95%) percent of the standard proctor density as set forth ASTM.

F) The embankment, foundation and abutments will be designed and constructed to be stable under normal construction and operating conditions with a minimum static safety factor of 1.3 at normal pool level with steady seepage saturation conditions.

G) The actual constructed height of the embankment will be a minimum of five (5%) percent higher than the design height to allow for settling over the life of the embankment.

H) The design embankment height for temporary impoundments will be a minimum of one (1) foot above the maximum water level anticipated from a ten (10) year - twenty-four (24) hour or a twenty-five (25) year - six (6) hour precipitation event (whichever is greater). The design embankment height for permanent impoundments will be minimum of one (1) foot above the maximum water level anticipated from a ten (10) year - twenty-four (24) hour or a twenty-five (25) year - six (6) hour precipitation event (whichever is greater).

I) For embankments constructed as point source discharges, the embankment will be constructed and abutments keyed into undisturbed, virgin ground if at all possible. In the event that this cannot be achieved, additional design and construction specifications will be submitted in the Detailed Design Plans.

J) The embankment all areas disturbed in the construction of the embankment will be seeded with a mixture of perennial and annual grasses, fertilized and mulched to prevent erosion and ensure restabilization. Hay dams, silt fences, rock check dams, etc. will be installed, where deemed necessary, as additional erosion prevention methods.

2. DISCHARGE STRUCTURE REQUIREMENTS

A) The primary spillway will be designed to adequately carry the anticipated peak runoff from a ten (10) year - twenty-four (24) hour precipitation event. The combination primary and secondary (emergency) spillway system will be designed to safely carry the anticipated peak runoff from a twenty -five (25) year - six (6) hour precipitation event. When sediment basins are proposed in the drainage course of a public water supply, the spillway system will be designed and constructed to adequately carry the runoff from a fifty (50) year - twenty-four hour precipitation event.

B) Channel linings for secondary (emergency) spillways will be a trapezoidal open channel constructed in natural ground and planted with a mixture of both annual and perennial grasses being predominantly fescue and bermuda. In the event the spillway cannot be constructed in natural ground, the spillway will be lined with riprap, concrete, asphalt or double rock (See Detailed Design Plans for Spillway Lining).

C) When consisting of pipe, the primary spillway will be installed according to Class "C" pipe installation for embankment bedding.

D) Sediment basins with a single spillway system such as a skimmer board, will be a trapezoidal open channel constructed in consolidated, nonerodible material and lined with rip-rap, concrete, asphalt or durable rock (See Detailed Design Plans for Spillway Lining).

E) The primary spillway will be designed and constructed with device to eliminate floating solids from leaving the impoundment. This device will consist of a turned down elbow when using pipe or a skimmer system when using an open channel spillway.

F) When necessary to prevent erosion of the embankment or discharge area, a splash pad of rip-rap, durable rock, sacrete, etc. will be installed at the discharge end of the primary spillway.

G) The combined spillway systems, for sediment basins constructed in series, will be designed to adequately accommodate the entire drainage area.

3. INSPECTION, MAINTENANCE AND CERTIFICATION REQUIREMENTS

A) Inspections will be conducted regularly during construction of the sediment basin by a qualified registered engineer or other qualified person under the direction of a professional engineer. Upon completion of construction, the sediment basin will be certified, by a qualified Registered Professional Engineer, to the Regulatory Authority as being constructed in accordance with the approved Detailed Design Plans.

B) Sediment basins will be inspected semi-monthly for erosion, instability, etc., with maintenance performed as necessary, until the removal of the strucure or until a Phase III Bond Release is granted.

C) Sediment basins will be examined quarterly for structure weakness, instability, erosion, slope failure or other hazardous conditions with maintenance performed as necessary.

D) Formal inspections will be made annually by a qualified Registered Professional Engineer or other qualified person under the direction of a Professional Engineer, including any reports or modifications, in accordance with 880-X-.20[1(j)] of the Alabama Surface Mining Regulations.

E) Retained sediment will be removed from each sediment basin when the accumulated sediment reaches the maximum allowable sediment volume as set forth in the detailed design plans.

4. BASIN REMOVAL REQUIREMENTS

A) Upon completion of mining, reclamation, re-stabilization and effluent standards being met, each sediment basin not proposed as a permanent water impoundment will be dewatered in a controlled manner by either pumping or siphoning. Upon successful dewatering, a determination will be made as to the retained sediment level in the basin. After determining the retained sediment level, a channel will be cut into the embankment down to the retained sediment level on the side of the embankment deemed most suitable to reach natural ground without encountering prohibiting rock. The embankment material removed from this newly constructed channel will be spread and compacted over the previous impoundment (wet area) area to prevent erosion and ensure re-stabilization. The newly constructed channel will be of adequate width (minimum thirty (30) feet) and sloped to a grade (approximately 1% to 3%) which will cause all surface drainage to travel across this area in sheet flow, minimizing the possibility of erosion. Also, where necessary, hay dams will be installed in strategic locations across the width of the channel to retain sediment and slow the water velocity to a favorable rate. Upon removal of the embankment section, all disturbed areas will be graded in such a manner to ensure slope stability, successful restabilization and to minimize erosion. All disturbed areas will be seeded with a mixture of annual and perennial grasses, fertilized and mulched. No slope, existing or created in the removal of the sediment basin, will be left on a grade that will slip or slough.

5. PERMANENT WATER IMPOUNDMENT REQUIREMENTS

A) Prior to a request for a Phase II Bond Release, all sediment basins being left as permanent water impoundments will have supplemental data submitted to the Regulatory Authority concerning water quality, water quantity, size, depth, configuration, postmining land use, etc.

B) Final grading slopes of the entire permanent water impoundment area will not exceed a slope of two (2) Horizontal to one (1) Vertical to provide for safety and access for future water users.

DETAILED DESIGN PLANS
SEDIMENT BASIN 001

Submitted by:

TASK Engineering Management Inc.
P. O. Box 660548
Birmingham, Alabama 35266
Telephone: (205) 978-5070
Email: jw-task@charter.net

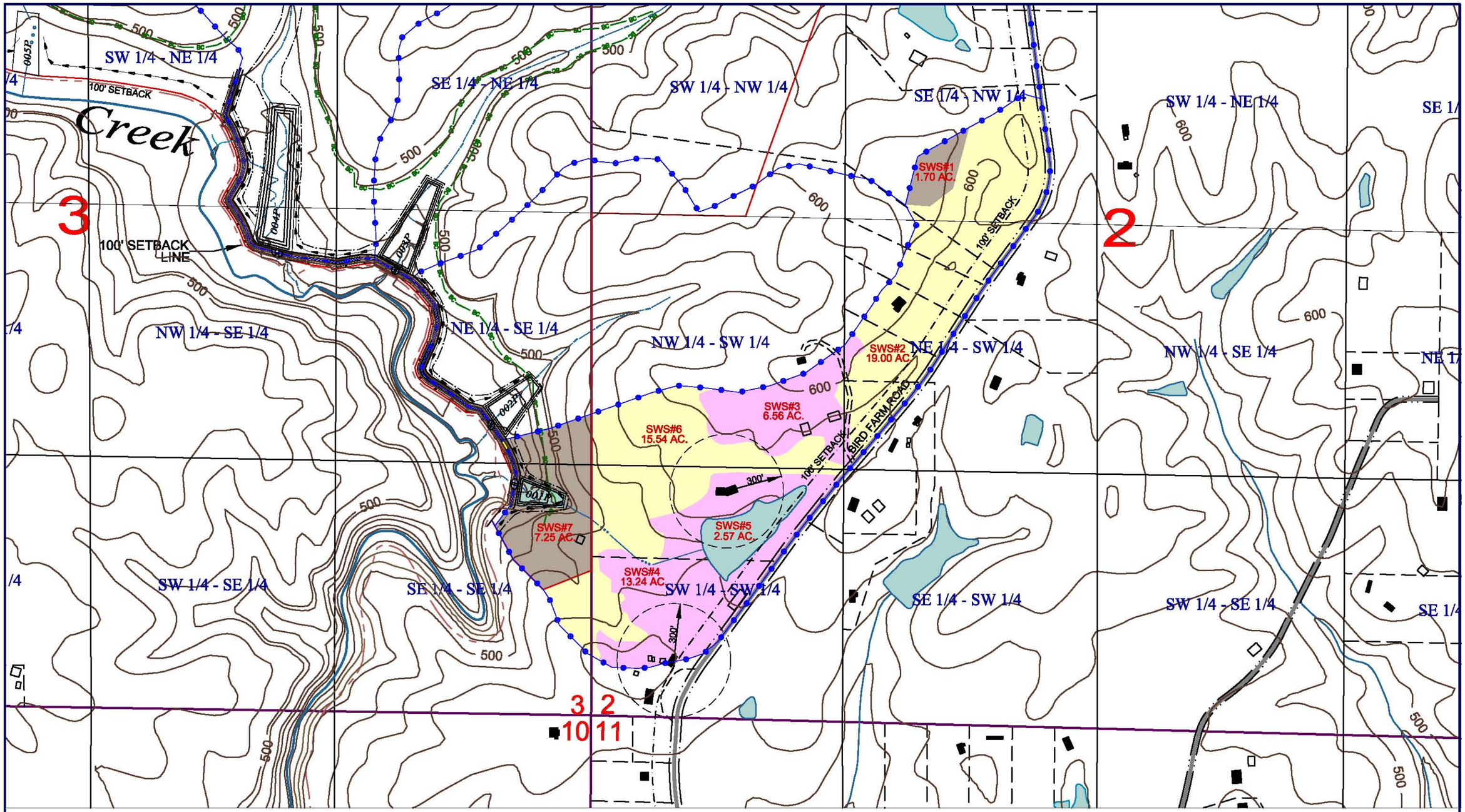

CEDAR LAKE MINING, INC.
LITTLE SPRING CREEK EAST, P-3968

WATERSHED MAP
SCALE: 1" = 500'
CONTOUR INTERVAL: 20 FT.

SEDIMENT BASIN 001

N
W E
S

LEGEND

- PERMIT BOUNDARY
- PREVIOUSLY SURFACE MINED
- GRADED & BARE, C.N. 81
- MOSTLY FOREST, GOOD COVER, C.N. 70
- RESIDENTIAL AREAS/LAWNS, CN 70
- PONDS/SEDIMENT BASINS, CN 100
- DRAINAGE DIVIDE
- ROADSIDE DITCH
- DIVERSION DITCH
- BASIN 001 — SEDIMENT BASIN\OUTFALL
- WATER IMPOUNDMENT

TASK EMI
CONSULTING ENGINEERS
P.O. BOX 660548
BIRMINGHAM, ALABAMA 35266
(205)978-5070
email: jw-task@charter.net

CEDAR LAKE MINING, INC.
LITTLE SPRING CREEK EAST, P-3968

GENERAL PLAN VIEW

SCALE: 1" = 100'
CONTOUR INTERVAL: 5 FT.

SEDIMENT BASIN 001

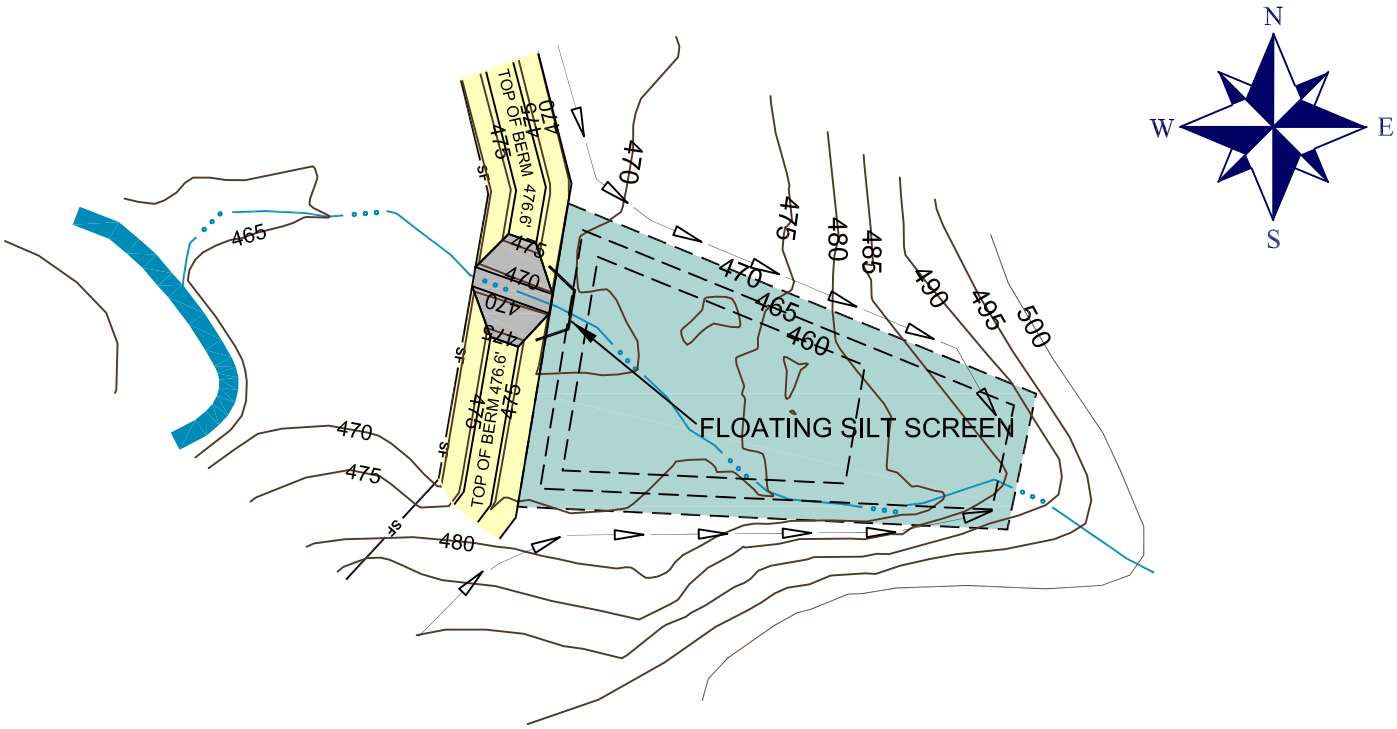

SEDIMENT BASIN 001

UPSTREAM TOE ELEVATION: 460.0'
SEDIMENT REMOVAL ELEVATION: 462.60'
PRIMARY SPILLWAY ELEVATION: 470.50'
EMERGENCY SPILLWAY ELEVATION: 470.50'
**MAXIMUM WATER ELEVATION: 472.12'
TOP OF DAM ELEVATION: 476.24' DESIGN
TOP OF DAM ELEVATION: 476.60' CONSTRUCTION

PRIMARY SPILLWAY: 10' TRAPEZOIDAL CHANNEL CONCRETE LINED

— — — 475 — — — EXCAVATED CONTOURS
——— 475 ——— ORIGINAL CONTOURS

DRAINAGE CONTROL BERM/ EMBANKMENT
NORMAL POOL AREA
CONCRETE SPILLWAY
DIVERSIONS AND/OR MAJOR INFLOW TO BASIN
—— SF —— SILT FENCE

TASK EMI
CONSULTING ENGINEERS
P.O. BOX 660548
BIRMINGHAM, ALABAMA 35266
(205)978-5070
email: jw-task@charter.net

** 25 YEAR - 6 HOUR PRECIPIATATION EVENT

DIVERSION BERM CROSS_SECTION

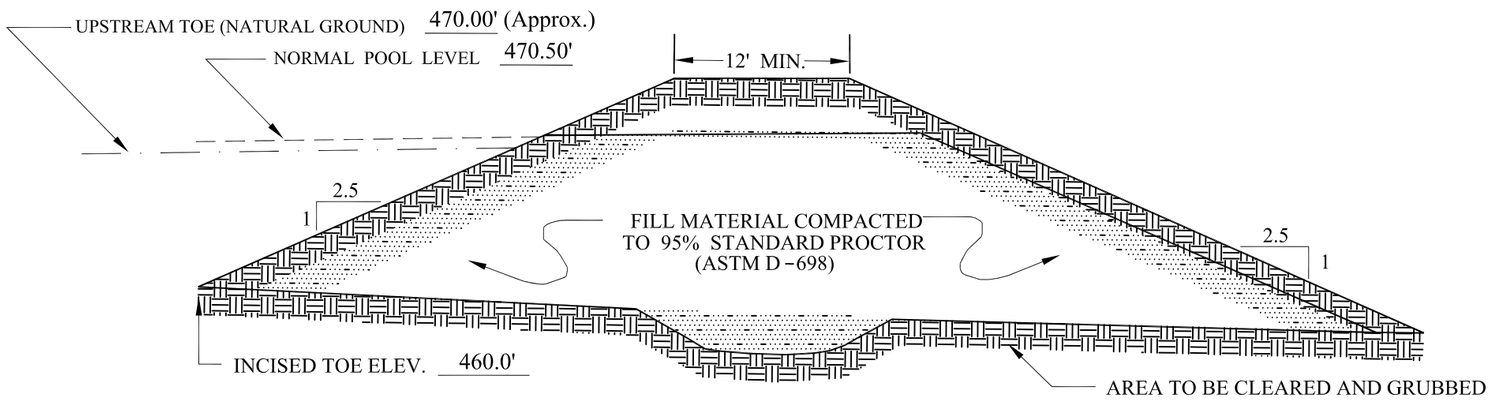

COMPANY: CEDAR LAKE MINING, INC.

MINE NAME: LITTLE SPRING CREEK EAST

PERMIT #: P - 3968

BASIN I.D. #: SEDIMENT BASIN 001

IMPOUNDMENT PROFILE

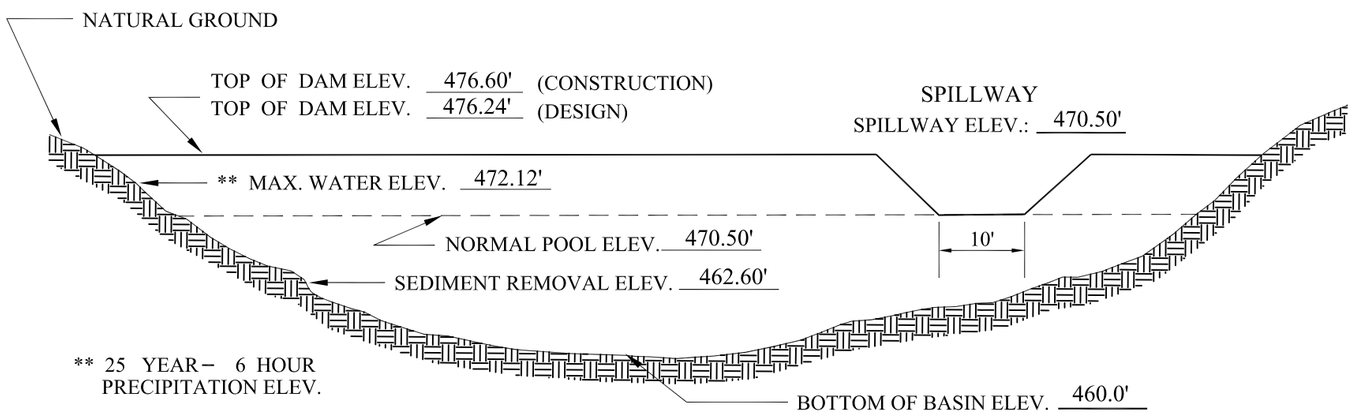

KEY BASIN PARAMETERS

DRAINAGE AREA	64.99	ACRES
DISTURBED AREA	9.58	ACRES
SEDIMENT STORAGE	0.90	AC.FT.
DETENTION STORAGE	4.44	AC.FT.
PERMANENT POOL CAPACITY	5.34	AC.FT.
* TOTAL BASIN STORAGE CAPACITY	6.38	AC.FT.
** PEAK INFLOW	96.22	C.F.S.
** PEAK OUTFLOW	64.64	C.F.S.

NOTE: ALL ELEVATIONS ASSUMED.

* 10 YEAR – 24 HOUR PRECIPITATION EVENT.

** 25 YEAR – 6 HOUR PRECIPITATION EVENT.

EMERGENCY SPILLWAY

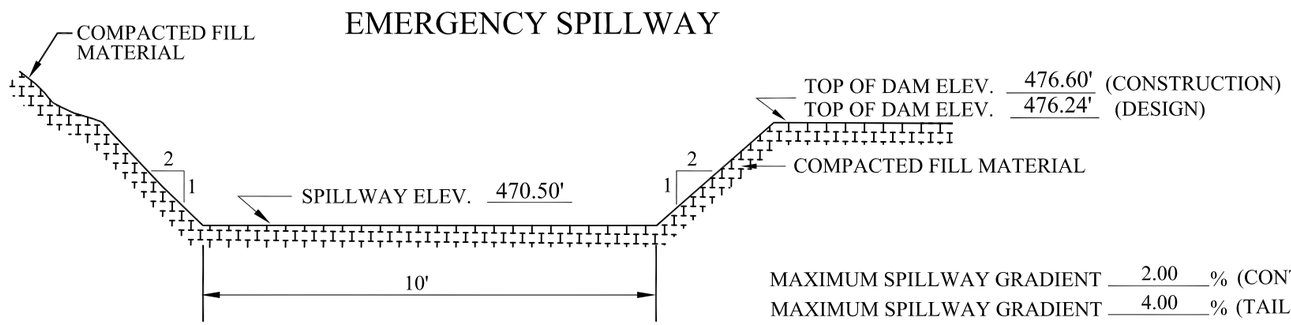

MAXIMUM SPILLWAY GRADIENT 2.00 % (CONTROL SECTION)

MAXIMUM SPILLWAY GRADIENT 4.00 % (TAIL DITCH SECTION)

SEE TYPICAL SPILLWAY PROFILE SHEET, SPILLWAY CONTROL SECTION AND TAIL DITCH DESIGN FOR CHANNEL LINING REQUIREMENTS

TASK EMI
CONSULTING ENGINEERS
P.O. BOX 660548
BIRMINGHAM, ALABAMA 35266
(205)978-5070
email: jw-task@charter.net

BASIN 001
TYPICAL SPILLWAY RROFILE

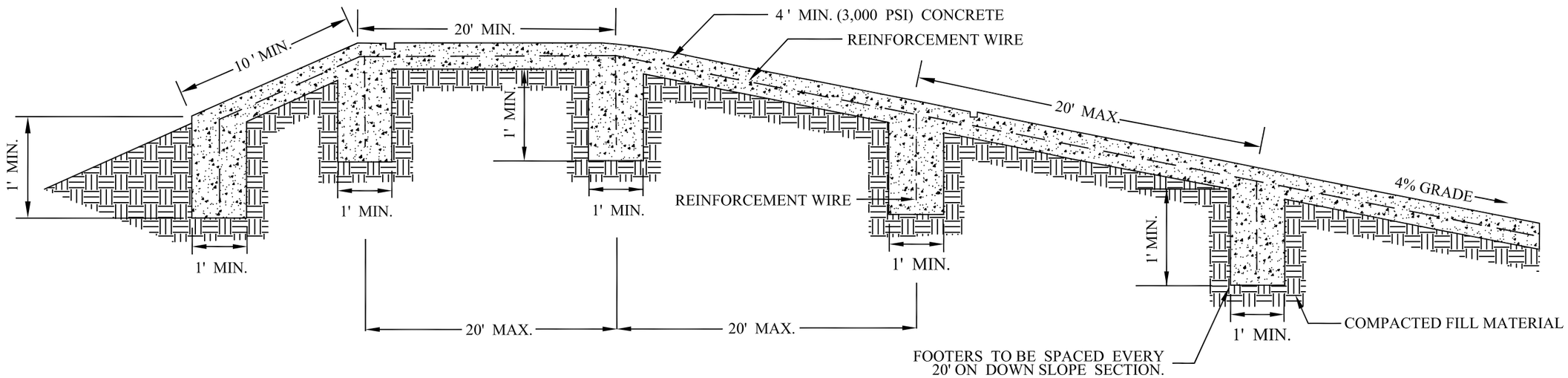

TYPICAL SPILLWAY CROSS - SECTION

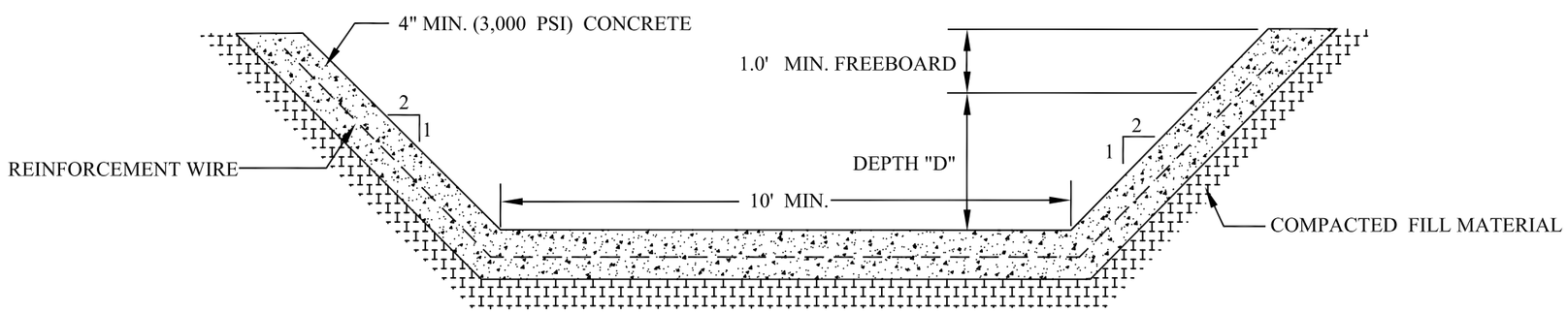

MINIMUM SPILLWAY DEPTH "D" = 0.77 FEET (CONTROL SECTION)
MINIMUM SPILLWAY DEPTH "D" = 0.63 FEET (TAIL DITCH SECTION)
TOTAL SPILLWAY DEPTH "D+1" = 1.77 FEET (CONTROL SECTION)
TOTAL SPILLWAY DEPTH "D+1" = 1.63 FEET (TAIL DITCH SECTION)

TASK EMI
CONSULTING ENGINEERS
P.O. BOX 660548
BIRMINGHAM, ALABAMA 35266
(205)978-5070
email: jw-task@charter.net

FLOATING SILT FENCE
SUBSURFACE WITHDRAWAL DEVICE

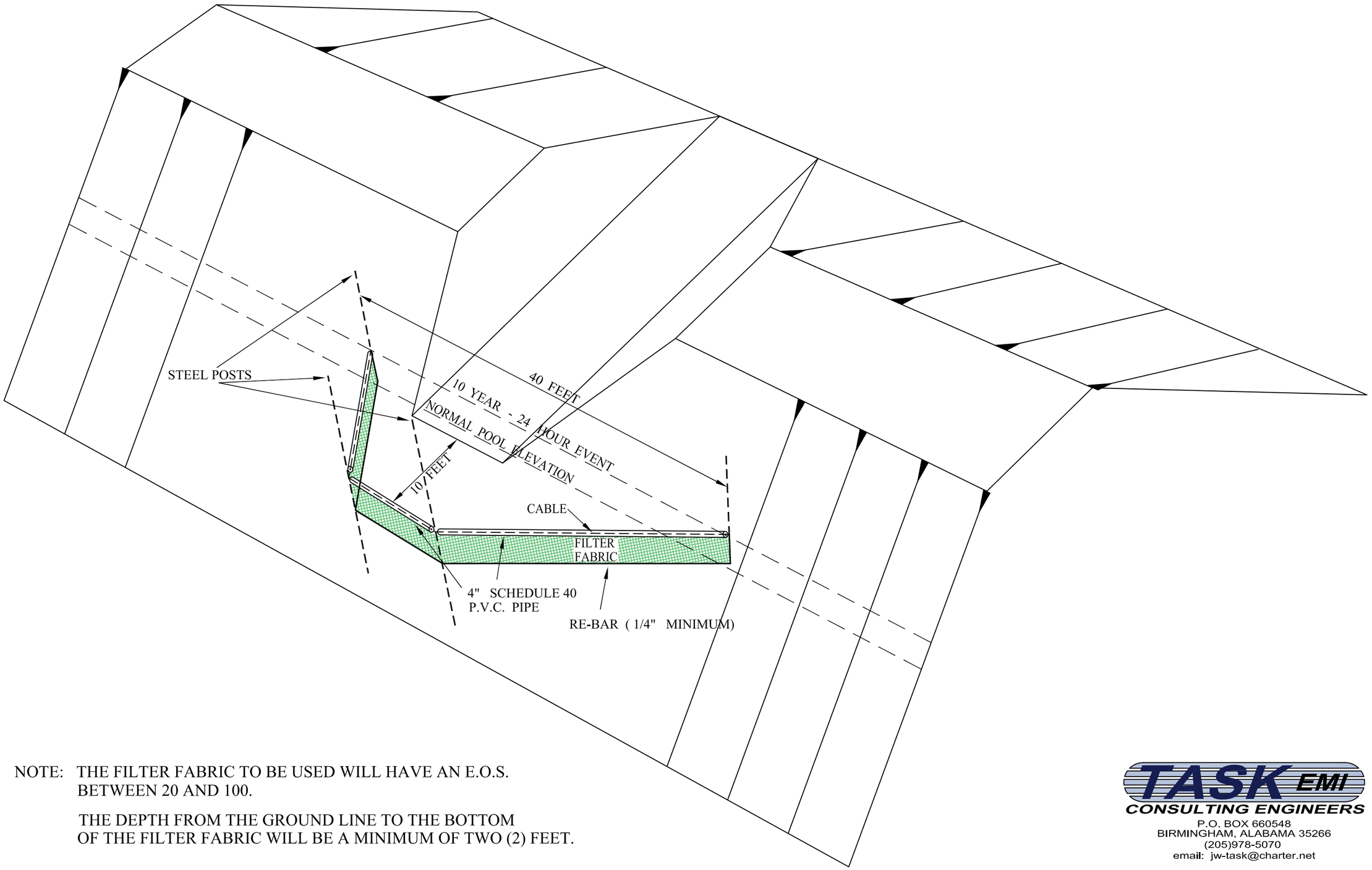

NOTE: THE FILTER FABRIC TO BE USED WILL HAVE AN E.O.S. BETWEEN 20 AND 100.

THE DEPTH FROM THE GROUND LINE TO THE BOTTOM OF THE FILTER FABRIC WILL BE A MINIMUM OF TWO (2) FEET.

TASK EMI
CONSULTING ENGINEERS
P.O. BOX 660548
BIRMINGHAM, ALABAMA 35266
(205)978-5070
email: jw-task@charter.net

FLOATING SILT FENCE
SUBSURFACE WITHDRAWAL DEVICE

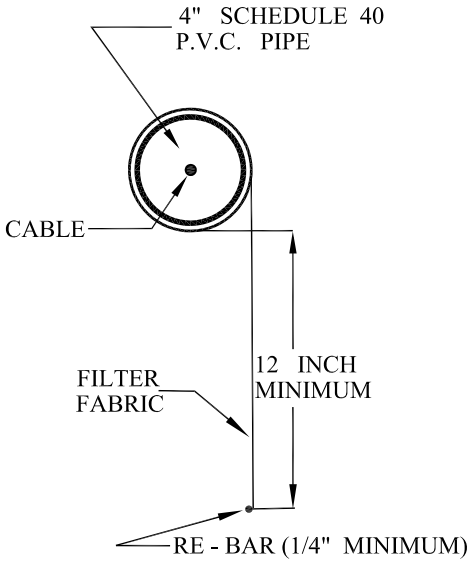

SIDE VIEW

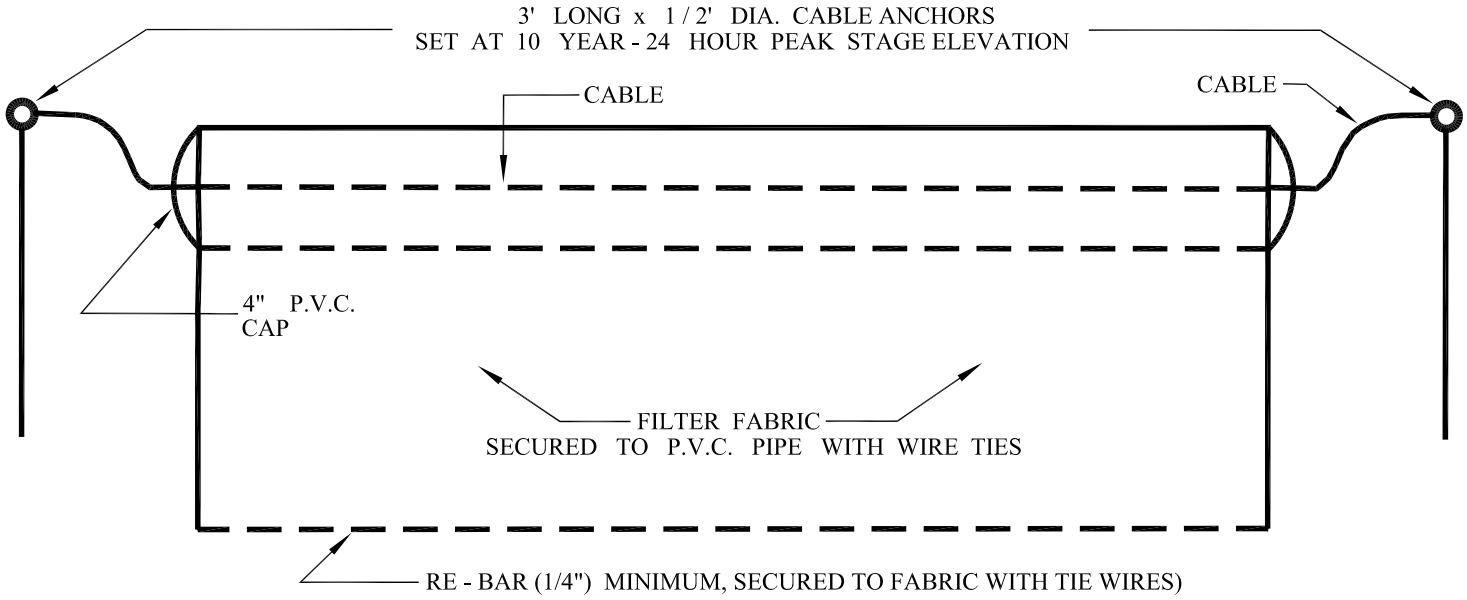

FRONT VIEW

(UPSTREAM SIDE)

NOTE: THE FILTER FABRIC TO BE USED WILL HAVE AN E.O.S. BETWEEN 20 AND 100.

THE DEPTH FROM THE GROUND LINE TO THE BOTTOM OF THE FILTER WILL BE A MINIMUM OF TWO (2) FEET.

TASK EMI
CONSULTING ENGINEERS
P.O. BOX 660548
BIRMINGHAM, ALABAMA 35266
(205)978-5070
email: jw-task@charter.net

SPILLWAY CHANNEL SPECIFICATIONS
SEDIMENT BASIN 001

The entire control section and tail ditch section of the emergency spillway will be cut into the compacted fill of the embankment and lined with a minimum of four (4) inches of reinforced concrete. All concrete will be reinforced with 10 gauge, 6"X 6" welded wire mesh. Fibermesh may be added to the concrete for additional strength, however, the addition of fibermesh shall not be used in place of the required 6"X 6" welded wire.

The gradient of the control section of the emergency spillway will not exceed two (2%) percent. The gradient of the tail ditch section of the emergency spillway will not exceed four (4%) percent.

The control section and tail ditch section of the emergency spillway will extend from the inner face of the embankment, past the centerline of the embankment and be carried out well beyond the downstream slope of the embankment.

The control section of the emergency spillway will be a minimum of 1.77 feet as measured vertically, allowing 0.77 feet for the maximum anticipated flow and 1.0 feet of dry freeboard. The tail ditch section of the emergency spillway will be a minimum of 1.63 feet as measured vertically, allowing 0.63 feet for the maximum anticipated flow and 1.0 feet of dry freeboard. There will be a transition zone of at least twenty (20') feet in length between the control section and the tail section. The minimum depth at the beginning of the transition will be 1.77 feet and 1.63 feet at the end of the transition. The flow line of the spillway will be smoothed at the transition to avoid abrupt changes in the flow line slope.

See enclosed SEDCAD 4.0 spillway tail ditch section design and attached Plan Sheet cross-section for the minimum and maximum emergency spillway construction requirements.

BASIN 001 SPILLWAY DESIGN

Material: Concrete, Rubble

Trapezoidal Channel

Bottom Width (ft)	Left Sideslope Ratio	Right Sideslope Ratio	Slope (%)	Manning's n	Freeboard Depth (ft)	Freeboard % of Depth	Freeboard Mult. x (VxD)
10.00	2.0:1	2.0:1	2.0	0.0220	1.00		

	w/o Freeboard	w/ Freeboard
Design Discharge:	64.64 cfs	
Depth:	0.77 ft	1.77 ft
Top Width:	13.08 ft	17.08 ft
Velocity:	7.27 fps	
X-Section Area:	8.89 sq ft	
Hydraulic Radius:	0.661 ft	
Froude Number:	1.55	

Copyright 1998-2010 Pamela J. Schwab

BASIN 001 SPILLWAY DESIGN

Material: Concrete, Rubble

Trapezoidal Channel

Bottom Width (ft)	Left Sideslope Ratio	Right Sideslope Ratio	Slope (%)	Manning's n	Freeboard Depth (ft)	Freeboard % of Depth	Freeboard Mult. x (VxD)
10.00	2.0:1	2.0:1	4.0	0.0220	1.00		

	w/o Freeboard	w/ Freeboard
Design Discharge:	64.64 cfs	
Depth:	0.63 ft	1.63 ft
Top Width:	12.52 ft	16.52 ft
Velocity:	9.12 fps	
X-Section Area:	7.08 sq ft	
Hydraulic Radius:	0.553 ft	
Froude Number:	2.14	

BASIN 001

Elevation-Area-Capacity Table

Elevation (ft)	Area (ac)	Capacity (ac-ft)
460.00	0.290	0.000
461.00	0.331	0.310
462.00	0.374	0.662
463.00	0.420	1.059
464.00	0.469	1.503
465.00	0.520	1.998
466.00	0.550	2.533
467.00	0.581	3.099
468.00	0.613	3.696
469.00	0.646	4.326
470.00	0.680	4.989
470.50	0.691	5.332
471.00	0.702	5.680
472.00	0.723	6.392
473.00	0.745	7.126
474.00	0.767	7.883
475.00	0.790	8.661

HYDROLOGY AND SEDIMENTOLOGY PREDICTION
10 YEAR - 24 HOUR PRECIPITATION EVENT
SEDIMENT BASIN 001

Submitted by:

TASK Engineering Management Inc.
P. O. Box 660548
Birmingham, Alabama 35266
Telephone: (205) 978-5070
Email: jw-task@charter.net

Copyright 1998 -2010 Pamela J. Schwab

Cedar Lake Mining, Inc.
Little Spring Creek East Mine
Sediment Basin No. 1

DRN-58

10 Year 24 Hour Event, 5.80 In.

Jerry W. Williams, P.E.

TASK Engineering Management Inc.
P.O. Box 660548
Birmingham, Alabama 35226

Phone: 205-978-5070
Email: jw-task@charter.net

General Information

Storm Information:

Storm Type:	DRN 58
Design Storm:	10 yr - 24 hr
Rainfall Depth:	5.800 inches

Particle Size Distribution:

Size (mm)	TOPSOIL	SPOIL
3.0000	99.000%	97.000%
2.0000	97.000%	93.000%
1.0000	93.000%	77.000%
0.5000	87.000%	59.000%
0.3000	77.000%	48.000%
0.2000	63.000%	42.000%
0.1000	46.000%	34.000%
0.0500	26.000%	27.000%
0.0300	13.000%	23.000%
0.0200	11.000%	19.000%
0.0100	7.000%	15.000%
0.0050	5.000%	9.000%
0.0030	4.000%	7.000%
0.0010	2.000%	4.000%

Structure Networking:

Type	Stru #	(flows into)	Stru #	Musk. K (hrs)	Musk. X	Description
Pond	#1	==>	End	0.000	0.000	Sediment Basin No. 1

#1
Pond

Structure Summary:

		Immediate Contributing Area (ac)	Total Contributing Area (ac)	Peak Discharge (cfs)	Total Runoff Volume (ac-ft)	Sediment (tons)	Peak Sediment Conc. (mg/l)	Peak Settleable Conc. (ml/l)	24VW (ml/l)
#1	In	66.540	66.540	56.78	15.36	328.4	40,008	27.00	10.58
	Out			52.91	15.36	47.1	4,186	0.14	0.08

Particle Size Distribution(s) at Each Structure

Structure #1:

Size (mm)	In	Out
3.0000	97.042%	100.000%
2.0000	93.088%	100.000%
1.0000	77.305%	100.000%
0.5000	59.538%	100.000%
0.3000	48.627%	100.000%
0.2000	42.494%	100.000%
0.1000	34.308%	100.000%
0.0500	27.052%	100.000%
0.0300	22.877%	100.000%
0.0200	18.903%	100.000%
0.0100	14.893%	100.000%
0.0050	8.950%	62.446%
0.0030	6.963%	48.583%
0.0010	3.974%	27.725%

Structure Detail:

Structure #1 (Pond)

Sediment Basin No. 1

Pond Inputs:

Initial Pool Elev:	470.50 ft
Initial Pool:	4.44 ac-ft
*Sediment Storage:	0.90 ac-ft
Dead Space:	20.00 %

**Sediment capacity was entered by user*

Emergency Spillway

Spillway Elev	Crest Length (ft)	Left Sideslope	Right Sideslope	Bottom Width (ft)
470.50	20.00	2.00:1	2.00:1	10.00

Pond Results:

Peak Elevation:	471.98 ft
H'graph Detention Time:	0.59 hrs
Pond Model:	CSTRS
Dewater Time:	1.09 days
Trap Efficiency:	85.67 %

Dewatering time is calculated from peak stage to lowest spillway

Elevation-Capacity-Discharge Table

Elevation	Area (ac)	Capacity (ac-ft)	Discharge (cfs)	Dewater Time (hrs)	
462.60	0.402	0.000	0.000		Top of Sed. Storage
463.00	0.420	0.165	0.000		
464.00	0.469	0.609	0.000		
465.00	0.520	1.103	0.000		
466.00	0.550	1.638	0.000		
467.00	0.581	2.204	0.000		
468.00	0.613	2.802	0.000		
469.00	0.646	3.431	0.000		
470.00	0.680	4.094	0.000		
470.50	0.691	4.437	0.000		Spillway #1
471.00	0.701	4.785	1.830	14.15	
471.98	0.723	5.484	52.907	12.00	Peak Stage
472.00	0.723	5.497	53.905		

Elevation	Area (ac)	Capacity (ac-ft)	Discharge (cfs)	Dewater Time (hrs)
473.00	0.745	6.231	141.972	
474.00	0.767	6.988	270.364	
475.00	0.790	7.766	441.772	

Detailed Discharge Table

Elevation (ft)	Emergency Spillway (cfs)	Combined Total Discharge (cfs)
462.60	0.000	0.000
463.00	0.000	0.000
464.00	0.000	0.000
465.00	0.000	0.000
466.00	0.000	0.000
467.00	0.000	0.000
468.00	0.000	0.000
469.00	0.000	0.000
470.00	0.000	0.000
470.50	0.000	0.000
471.00	1.830	1.830
472.00	53.905	53.905
473.00	141.972	141.972
474.00	270.364	270.364
475.00	441.772	441.772

Subwatershed Hydrology Detail:

Stru #	SWS #	SWS Area (ac)	Time of Conc (hrs)	Musk K (hrs)	Musk X	Curve Number	UHS	Peak Discharge (cfs)	Runoff Volume (ac-ft)
#1	1	1.700	0.068	0.625	0.372	81.000	F	2.11	0.523
	2	19.000	0.778	0.069	0.405	70.000	M	10.65	3.339
	3	6.560	0.120	0.061	0.408	70.000	M	6.28	1.445
	4	13.240	0.086	0.024	0.396	70.000	M	12.68	2.916
	5	2.570	1.683	0.024	0.425	100.000	F	2.67	1.166
	6	15.540	0.122	0.019	0.415	70.000	M	14.88	3.422
	7	7.250	0.014	0.000	0.000	81.000	F	9.01	2.233
	8	0.680	0.264	0.000	0.000	100.000	F	0.98	0.312
	Σ	**66.540**						**56.78**	**15.357**

Subwatershed Sedimentology Detail:

Stru #	SWS #	Soil K	L (ft)	S (%)	C	P	PS #	Sediment (tons)	Peak Sediment Conc. (mg/l)	Peak Settleable Conc (ml/l)	24VW (ml/l)
#1	1	0.240	50.00	1.00	0.9000	1.0000	2	2.5	6,077	4.10	2.33
	2	0.320	400.00	6.50	0.0060	1.0000	1	2.4	885	0.63	0.38
	3	0.320	200.00	5.00	0.0030	1.0000	1	0.3	249	0.18	0.10
	4	0.320	200.00	5.90	0.0030	1.0000	1	0.7	317	0.23	0.13
	5	0.001	200.00	0.01	0.0001	1.0000	1	0.0	0	0.00	0.00
	6	0.320	400.00	8.50	0.0030	1.0000	1	1.8	672	0.49	0.28
	7	0.240	200.00	12.50	0.9000	1.0000	2	320.8	173,317	116.82	67.65
	8	0.001	200.00	0.01	0.0001	1.0000	1	0.0	0	0.00	0.00
	Σ							**328.4**	**40,008**	**27.00**	**10.58**

Subwatershed Time of Concentration Details:

Stru #	SWS #	Land Flow Condition	Slope (%)	Vert. Dist. (ft)	Horiz. Dist. (ft)	Velocity (fps)	Time (hrs)
#1	1	5. Nearly bare and untilled, and alluvial valley fans	1.01	2.50	247.01	1.000	0.068
#1	**1**	**Time of Concentration:**					**0.068**
#1	2	1. Forest with heavy ground litter	3.04	35.00	1,150.02	0.440	0.726
		8. Large gullies, diversions, and low flowing streams	1.55	11.00	710.04	3.730	0.052
#1	**2**	**Time of Concentration:**					**0.778**
#1	3	3. Short grass pasture	4.12	28.00	680.00	1.620	0.116

Stru #	SWS #	Land Flow Condition	Slope (%)	Vert. Dist. (ft)	Horiz. Dist. (ft)	Velocity (fps)	Time (hrs)
		8. Large gullies, diversions, and low flowing streams	2.29	1.74	76.00	4.530	0.004
#1	**3**	**Time of Concentration:**					**0.120**
#1	4	3. Short grass pasture	4.91	27.00	550.01	1.770	0.086
#1	**4**	**Time of Concentration:**					**0.086**
#1	5	8. Large gullies, diversions, and low flowing streams	0.00	0.01	666.66	0.110	1.683
#1	**5**	**Time of Concentration:**					**1.683**
#1	6	1. Forest with heavy ground litter	7.08	17.00	240.00	0.670	0.099
		8. Large gullies, diversions, and low flowing streams	7.57	53.00	700.00	8.250	0.023
#1	**6**	**Time of Concentration:**					**0.122**
#1	7	8. Large gullies, diversions, and low flowing streams	12.86	72.00	560.00	10.750	0.014
#1	**7**	**Time of Concentration:**					**0.014**
#1	8	8. Large gullies, diversions, and low flowing streams	0.00	0.01	200.00	0.210	0.264
#1	**8**	**Time of Concentration:**					**0.264**

Subwatershed Muskingum Routing Details:

Stru #	SWS #	Land Flow Condition	Slope (%)	Vert. Dist. (ft)	Horiz. Dist. (ft)	Velocity (fps)	Time (hrs)
#1	1	1. Forest with heavy ground litter	3.38	29.00	857.00	0.460	0.517
		8. Large gullies, diversions, and low flowing streams	4.65	117.22	2,520.00	6.470	0.108
#1	**1**	**Muskingum K:**					**0.625**
#1	2	8. Large gullies, diversions, and low flowing streams	5.91	107.00	1,811.00	7.290	0.069
#1	**2**	**Muskingum K:**					**0.069**
#1	3	8. Large gullies, diversions, and low flowing streams	6.29	104.51	1,662.00	7.520	0.061
#1	**3**	**Muskingum K:**					**0.061**
#1	4	8. Large gullies, diversions, and low flowing streams	4.64	26.00	560.00	6.460	0.024
#1	**4**	**Muskingum K:**					**0.024**
#1	5	8. Large gullies, diversions, and low flowing streams	10.47	89.00	850.00	9.700	0.024
#1	**5**	**Muskingum K:**					**0.024**
#1	6	8. Large gullies, diversions, and low flowing streams	7.63	45.00	590.00	8.280	0.019
#1	**6**	**Muskingum K:**					**0.019**

HYDROLOGY AND SEDIMENTOLOGY PREDICTION
25 YEAR - 6 HOUR PRECIPITATION EVENT
SEDIMENT BASIN 001

Submitted by:

TASK Engineering Management Inc.
P. O. Box 660548
Birmingham, Alabama 35266
Telephone: (205) 978-5070
Email: jw-task@charter.net

Copyright 1998 -2010 Pamela J. Schwab

Cedar Lake Mining, Inc.
Little Spring Creek East Mine
Sediment Basin No. 1

SCS-6 HOUR

25 Year 6 Hour Event, 4.90 In.

Jerry W. Williams, P.E.

TASK Engineering Management Inc.
P.O. Box 660548
Birmingham, Alabama 35226

Phone: 205-978-5070
Email: jw-task@charter.net

General Information

Storm Information:

Storm Type:	SCS 6 HOUR
Design Storm:	25 yr - 6 hr
Rainfall Depth:	4.900 inches

Particle Size Distribution:

Size (mm)	TOPSOIL	SPOIL
3.0000	99.000%	97.000%
2.0000	97.000%	93.000%
1.0000	93.000%	77.000%
0.5000	87.000%	59.000%
0.3000	77.000%	48.000%
0.2000	63.000%	42.000%
0.1000	46.000%	34.000%
0.0500	26.000%	27.000%
0.0300	13.000%	23.000%
0.0200	11.000%	19.000%
0.0100	7.000%	15.000%
0.0050	5.000%	9.000%
0.0030	4.000%	7.000%
0.0010	2.000%	4.000%

Structure Networking:

Type	Stru #	(flows into)	Stru #	Musk. K (hrs)	Musk. X	Description
Pond	#1	==>	End	0.000	0.000	Sediment Basin No. 1

#1
Pond

Structure Summary:

		Immediate Contributing Area (ac)	Total Contributing Area (ac)	Peak Discharge (cfs)	Total Runoff Volume (ac-ft)	Sediment (tons)	Peak Sediment Conc. (mg/l)	Peak Settleable Conc. (ml/l)	24VW (ml/l)
#1	In	66.540	66.540	96.22	11.66	481.2	153,844	103.76	20.03
	Out			64.64	11.66	75.6	6,575	0.44	0.33

Particle Size Distribution(s) at Each Structure

Structure #1:

Size (mm)	In	Out
3.0000	97.030%	100.000%
2.0000	93.062%	100.000%
1.0000	77.217%	100.000%
0.5000	59.380%	100.000%
0.3000	48.434%	100.000%
0.2000	42.402%	100.000%
0.1000	34.343%	100.000%
0.0500	27.105%	100.000%
0.0300	22.943%	100.000%
0.0200	18.957%	100.000%
0.0100	14.939%	95.123%
0.0050	8.976%	57.155%
0.0030	6.983%	44.465%
0.0010	3.986%	25.380%

Structure Detail:

Structure #1 (Pond)

Sediment Basin No. 1

Pond Inputs:

Initial Pool Elev:	470.50 ft
Initial Pool:	4.44 ac-ft
*Sediment Storage:	0.90 ac-ft
Dead Space:	20.00 %

**Sediment capacity was entered by user*

Pond Results:

Peak Elevation:	472.12 ft
H'graph Detention Time:	0.39 hrs
Pond Model:	CSTRS
Dewater Time:	0.80 days
Trap Efficiency:	84.29 %

Dewatering time is calculated from peak stage to lowest spillway

Elevation-Capacity-Discharge Table

Elevation	Area (ac)	Capacity (ac-ft)	Discharge (cfs)	Dewater Time (hrs)	
462.60	0.402	0.000	0.000		Top of Sed. Storage
463.00	0.420	0.165	0.000		
464.00	0.469	0.609	0.000		
465.00	0.520	1.103	0.000		
466.00	0.550	1.638	0.000		
467.00	0.581	2.204	0.000		
468.00	0.613	2.802	0.000		
469.00	0.646	3.431	0.000		
470.00	0.680	4.094	0.000		
470.50	0.691	4.437	0.000		
471.00	0.701	4.785	1.830	14.25	
472.00	0.723	5.497	53.905	4.80	
472.12	0.726	5.587	64.643	0.05	Peak Stage
473.00	0.745	6.231	141.972		
474.00	0.767	6.988	270.364		
475.00	0.790	7.766	441.772		

Detailed Discharge Table

Elevation (ft)	Combined Total Discharge (cfs)
462.60	0.000
463.00	0.000
464.00	0.000
465.00	0.000
466.00	0.000
467.00	0.000
468.00	0.000
469.00	0.000
470.00	0.000
470.50	0.000
471.00	1.830
472.00	53.905
473.00	141.972
474.00	270.364
475.00	441.772

Subwatershed Hydrology Detail:

Stru #	SWS #	SWS Area (ac)	Time of Conc (hrs)	Musk K (hrs)	Musk X	Curve Number	UHS	Peak Discharge (cfs)	Runoff Volume (ac-ft)
#1	1	1.700	0.068	0.625	0.372	81.000	F	5.38	0.410
	2	19.000	0.778	0.069	0.405	70.000	M	10.69	2.475
	3	6.560	0.120	0.061	0.408	70.000	M	13.15	1.072
	4	13.240	0.086	0.024	0.396	70.000	M	26.55	2.165
	5	2.570	1.683	0.024	0.425	100.000	F	4.86	0.985
	6	15.540	0.122	0.019	0.415	70.000	M	31.16	2.541
	7	7.250	0.014	0.000	0.000	81.000	F	22.95	1.749
	8	0.680	0.264	0.000	0.000	100.000	F	2.86	0.263
	Σ	**66.540**						**96.22**	**11.661**

Subwatershed Sedimentology Detail:

Stru #	SWS #	Soil K	L (ft)	S (%)	C	P	PS #	Sediment (tons)	Peak Sediment Conc. (mg/l)	Peak Settleable Conc (ml/l)	24VW (ml/l)
#1	1	0.240	50.00	1.00	0.9000	1.0000	2	3.6	10,511	7.08	4.39
	2	0.320	400.00	6.50	0.0060	1.0000	1	2.1	759	0.51	0.41
	3	0.320	200.00	5.00	0.0030	1.0000	1	0.4	420	0.31	0.18
	4	0.320	200.00	5.90	0.0030	1.0000	1	0.9	539	0.40	0.23
	5	0.001	200.00	0.01	0.0001	1.0000	1	0.0	0	0.00	0.00
	6	0.320	400.00	8.50	0.0030	1.0000	1	2.2	1,144	0.84	0.48
	7	0.240	200.00	12.50	0.9000	1.0000	2	472.1	300,389	202.47	122.98
	8	0.001	200.00	0.01	0.0001	1.0000	1	0.0	0	0.00	0.00
	Σ							**481.2**	**153,844**	**103.76**	**20.03**

Subwatershed Time of Concentration Details:

Stru #	SWS #	Land Flow Condition	Slope (%)	Vert. Dist. (ft)	Horiz. Dist. (ft)	Velocity (fps)	Time (hrs)
#1	1	5. Nearly bare and untilled, and alluvial valley fans	1.01	2.50	247.01	1.000	0.068
#1	**1**	**Time of Concentration:**					**0.068**
#1	2	1. Forest with heavy ground litter	3.04	35.00	1,150.02	0.440	0.726
		8. Large gullies, diversions, and low flowing streams	1.55	11.00	710.04	3.730	0.052
#1	**2**	**Time of Concentration:**					**0.778**
#1	3	3. Short grass pasture	4.12	28.00	680.00	1.620	0.116
		8. Large gullies, diversions, and low flowing streams	2.29	1.74	76.00	4.530	0.004

Stru #	SWS #	Land Flow Condition	Slope (%)	Vert. Dist. (ft)	Horiz. Dist. (ft)	Velocity (fps)	Time (hrs)
#1	**3**	**Time of Concentration:**					**0.120**
#1	4	3. Short grass pasture	4.91	27.00	550.01	1.770	0.086
#1	**4**	**Time of Concentration:**					**0.086**
#1	5	8. Large gullies, diversions, and low flowing streams	0.00	0.01	666.66	0.110	1.683
#1	**5**	**Time of Concentration:**					**1.683**
#1	6	1. Forest with heavy ground litter	7.08	17.00	240.00	0.670	0.099
		8. Large gullies, diversions, and low flowing streams	7.57	53.00	700.00	8.250	0.023
#1	**6**	**Time of Concentration:**					**0.122**
#1	7	8. Large gullies, diversions, and low flowing streams	12.86	72.00	560.00	10.750	0.014
#1	**7**	**Time of Concentration:**					**0.014**
#1	8	8. Large gullies, diversions, and low flowing streams	0.00	0.01	200.00	0.210	0.264
#1	**8**	**Time of Concentration:**					**0.264**

Subwatershed Muskingum Routing Details:

Stru #	SWS #	Land Flow Condition	Slope (%)	Vert. Dist. (ft)	Horiz. Dist. (ft)	Velocity (fps)	Time (hrs)
#1	1	1. Forest with heavy ground litter	3.38	29.00	857.00	0.460	0.517
		8. Large gullies, diversions, and low flowing streams	4.65	117.22	2,520.00	6.470	0.108
#1	**1**	**Muskingum K:**					**0.625**
#1	2	8. Large gullies, diversions, and low flowing streams	5.91	107.00	1,811.00	7.290	0.069
#1	**2**	**Muskingum K:**					**0.069**
#1	3	8. Large gullies, diversions, and low flowing streams	6.29	104.51	1,662.00	7.520	0.061
#1	**3**	**Muskingum K:**					**0.061**
#1	4	8. Large gullies, diversions, and low flowing streams	4.64	26.00	560.00	6.460	0.024
#1	**4**	**Muskingum K:**					**0.024**
#1	5	8. Large gullies, diversions, and low flowing streams	10.47	89.00	850.00	9.700	0.024
#1	**5**	**Muskingum K:**					**0.024**
#1	6	8. Large gullies, diversions, and low flowing streams	7.63	45.00	590.00	8.280	0.019
#1	**6**	**Muskingum K:**					**0.019**