HYDROLOGY STUDY FOR
NORTH PRATT MINING, LLC

PRATT NO. 1 MINE

P-3972

JEFFERSON COUNTY, ALABAMA

BY

PERC ENGINEERING CO., INC.

P.O. BOX 1712

JASPER, ALABAMA 35502

PRIMARY ROAD DESIGN PLANS

PRIMARY ROADS 1P AND 2P

ATTACHMENT III-B-5

APRIL 16, 2013

PERC
ENGINEERING CO., INC.

Telephone: (205) 384-5553
Facsimile: (205) 295-3114 - Main Building
(205) 295-3115 - Water Lab
Web Address: www.percengineering.com

April 16, 2013

Mr. Gary Heaton, P.E.
Alabama Surface Mining Commission
Post Office Box 2390
Jasper, Alabama 35502-2390

RE: North Pratt Mining, LLC
Pratt No. 1 Mine
P-3972

Dear Gary:

I hereby certify the attached detailed design plans for Primary Roads 1P and 2P for the above referenced mine are in accordance with the Regulations of the Alabama Surface Mining Commission as adopted by Act 81-435 of December 18, 1981 and amended to date, and are true and correct to the best of my knowledge and belief.

If you have any questions or required additional information, please feel free to call.

Sincerely,
PERC Engineering Co., Inc.

Stephen Miles, P.E.
Alabama License No. 33253

ALABAMA LICENSED No. 33253 PROFESSIONAL ENGINEER STEPHEN MILES

SPECIFICATIONS FOR THE CONSTRUCTION, MAINTENANCE AND RECLAMATION OF PRIMARY ROADS

1. Primary roads shall be designed by or under the direction of a registered professional engineer in accordance with the Alabama Surface Mining Commission rules and regulations and prudent engineering practice.

2. Each roadway embankment will be designed and constructed so as to have a minimum static safety factor of 1.3.

3. To the extent possible, roads will be located on ridges or on the most stable available slopes to prevent or minimize erosion, downstream sedimentation and flooding in an effort to prevent adverse effects to fish, wildlife and related environmental values.

4. To the extent possible, roads will be located above the sediment basins to be constructed for the mining operation in an effort to control or prevent additional contributions of suspended solids to stream flow or runoff outside the permit area and to comply with State and Federal water quality standards applicable to receiving waters and avoid the alteration of the normal flow of water in streambeds or drainage channels while preventing or controlling damage to public or private property. Where it is not possible or is impractical to locate roads in this manner, sediment control devices such as silt fencing, hay bale check dams and rock filter check dams will be used as necessary to maintain water quality. No fording of intermittent or perennial streams will be conducted unless specifically approved by the Alabama Surface Mining Commission as temporary routes to be used during road construction.

5. Prior to construction, the roadway will be cleared, grubbed and will have the topsoil removed. The clearing limits will be kept to the minimum necessary to accommodate the roadbed and associated ditch construction.

6. Roads will be constructed of suitable compacted subgrade material. The material will be free of sod, roots, stones over 12 inches in diameter, and other objectionable materials. The material will be placed and spread over the entire fill area, starting at the lowest point in layers not to exceed 12 inches in thickness. The material will be compacted to 95 percent of the density, based on standard proctor as outlined in ASTM.

7. Primary roads will have a minimum width of eighteen feet and a maximum width necessary to accommodate the largest equipment traveling the road.
8. Roadbeds will be cut to consolidated non-erodible material or will be surfaced with durable non-toxic, non-acid forming substances. The wearing surface will consist of durable sandstone, chert, crushed limestone, crushed concrete, crushed asphalt, red rock, ironore refuse, gravel, or other durable non-toxic, non-acid forming material approved by the Regulatory Authority. The wearing surface will be placed on the roadbed to a depth of four inches.

9. No sustained grades will exceed ten percent unless deemed necessary, in which case appropriate sediment control facilities will be constructed. If grades in excess of fifteen percent are required, cross drains, ditch relief drains and road drainways will be located at a minimum distance of three-hundred feet.

10. Roads will be constructed so as to have adequate drainage utilizing ditches, culverts, cross drains and ditch relief drains designed to safely pass the peak runoff from a ten year, six hour precipitation event. Drainage pipes and culverts shall be installed as designed and will be maintained in a free and operating condition to prevent and control erosion at inlets and outlets. Culverts have been designed to support the load of the heaviest equipment to travel the road and are based on the Handbook of Steel Drainage and Highway Construction Products by the American Iron and Steel Institute and the equipment specifications. Drainage ditches will be constructed and maintained in accordance with the approved design to prevent uncontrolled drainage over the road surface and embankment. Roads will not be located in the channel of an intermittent or perennial stream unless specifically approved by the Alabama Surface Mining Commission. Additionally, no relocation and/or alteration of an intermittent or perennial stream will be done unless specifically approved by the Alabama Surface Mining Commission. In the event that it becomes evident that any drainage structures including culverts, bridges and/or low water crossings will be required in order to cross an intermittent or perennial stream, the structure will be designed and constructed in accordance with Alabama Surface Mining Commission requirements and prudent engineering practice and the approval of the design(s) will be acquired prior to the commencement of construction. Hay bale check

dams and silt fences will be used at strategic locations when necessary to control sediment runoff. Immediately upon completion of construction, the side slopes of the road embankments and/or cuts will be fertilized, seeded with annual and perennial grasses and mulch will be added to aid in the prevention of erosion and to enhance seed germination. The seed mix will consist of, but is not limited to, some combination of the following species: bermuda grass, fescue, lespedeza, rye grass, brown top millet, clover and vetch. The particular species to be planted will vary with the planting season at the time of seed application. Upon completion of construction of each phase of the roadway the construction will be certified to the Alabama Surface Mining Commission as having been done in accordance with the approved plans for the roadway and associated facilities.

11. Routine maintenance will be required to assure that the road continually meets performance standards and will consist of periodic grading, resurfacing, dust suppression and maintenance of sediment control facilities. Dust suppression will consist of the application of water, chemical binders and/or other dust suppressants. No oil will be utilized in this process. Spot seeding, fertilizing and mulching will be performed as necessary to improve vegetative cover on roadway slopes. A road damaged by a catastrophic event shall be repaired as soon as practicable after the damage has occurred.

12. Roads not to be retained as part of the post mine land use shall be reclaimed in accordance with the approved reclamation plan for this permit as soon as practicable after they are no longer needed as part of the mining and reclamation operation, using the following procedures:

    a. The road will be closed to traffic.
    b. All bridges, culverts and other drainage structures not approved as part of the post mine land use will be removed.
    c. All road surfacing materials that are not compatible with the post mine land use or revegetation requirements will be properly disposed of on-site or removed from the site for re-use.
    d. Roadway cut and fill slopes shall be regraded and reshaped to be compatible with the post mine land use and to compliment the natural drainage pattern of the surrounding terrain.
    e. The natural drainage patterns shall be protected from surface runoff and erosion utilizing the installation of dikes and/or cross drains as necessary.

f. The roadbed shall be ripped or scarified as necessary, the topsoil or substitute or approved growing medium shall be replaced and revegetated in accordance with the approved reclamation plan for this permit.

13. The drawings and data contained in the specific design plans illustrate typical roadbed configurations for primary roads as well as site specific design of drainage structures, stability analysis and ditch sections.

TYPICAL HAUL ROAD
CUT SECTION

NO SCALE

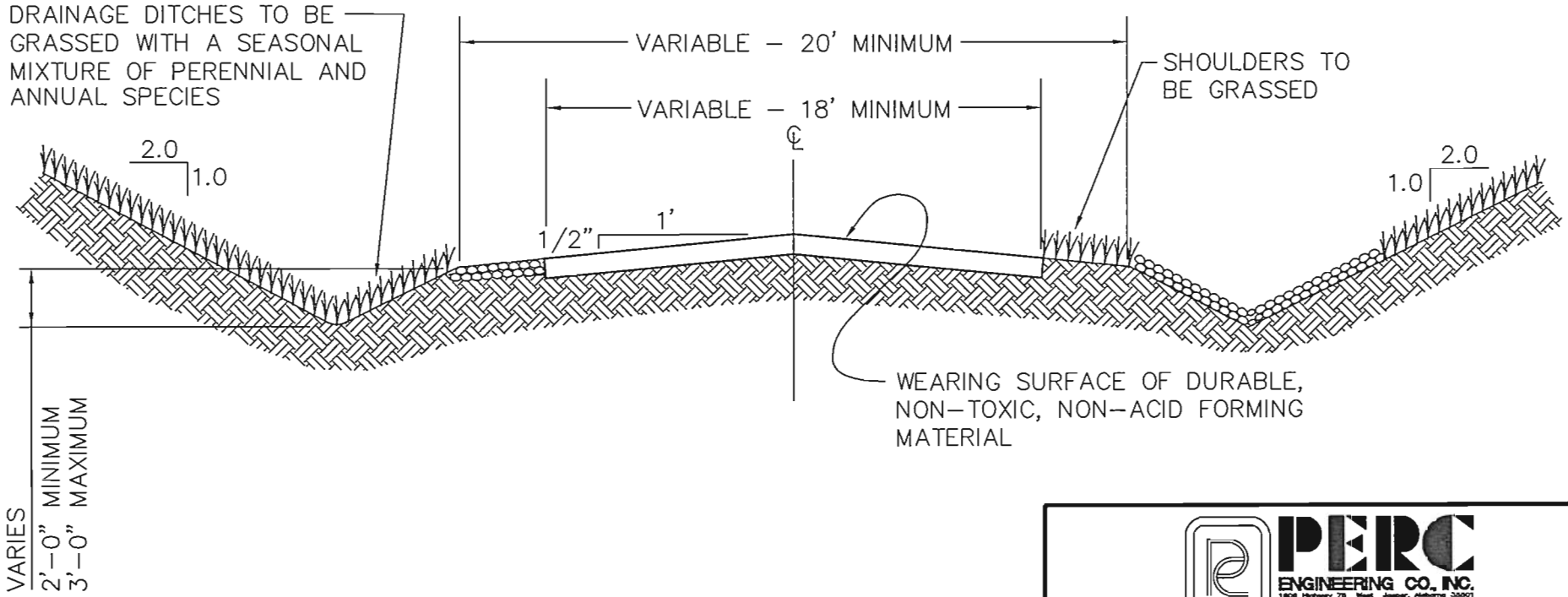

PERC ENGINEERING CO., INC.
1806 Highway 78 West Jasper, Alabama 35501
P.O. Box 1712 Jasper, Alabama 35502
(205) 384-8553 Office (205) 384-9481 Fax

TYPICAL CUT SECTION
PRIMARY HAUL ROAD

DRAWN BY:	K.D.P.	DATE:	2–3–97
DWG. NAME:	TYPHAULC		
APPROVED BY:	S.R.I.	SCALE:	NONE

ATTACHMENT III.–B.–5.

K:\S\TYPHAULC 02/03/97 15:56

TYPICAL HAUL ROAD
FILL SECTION

NO SCALE

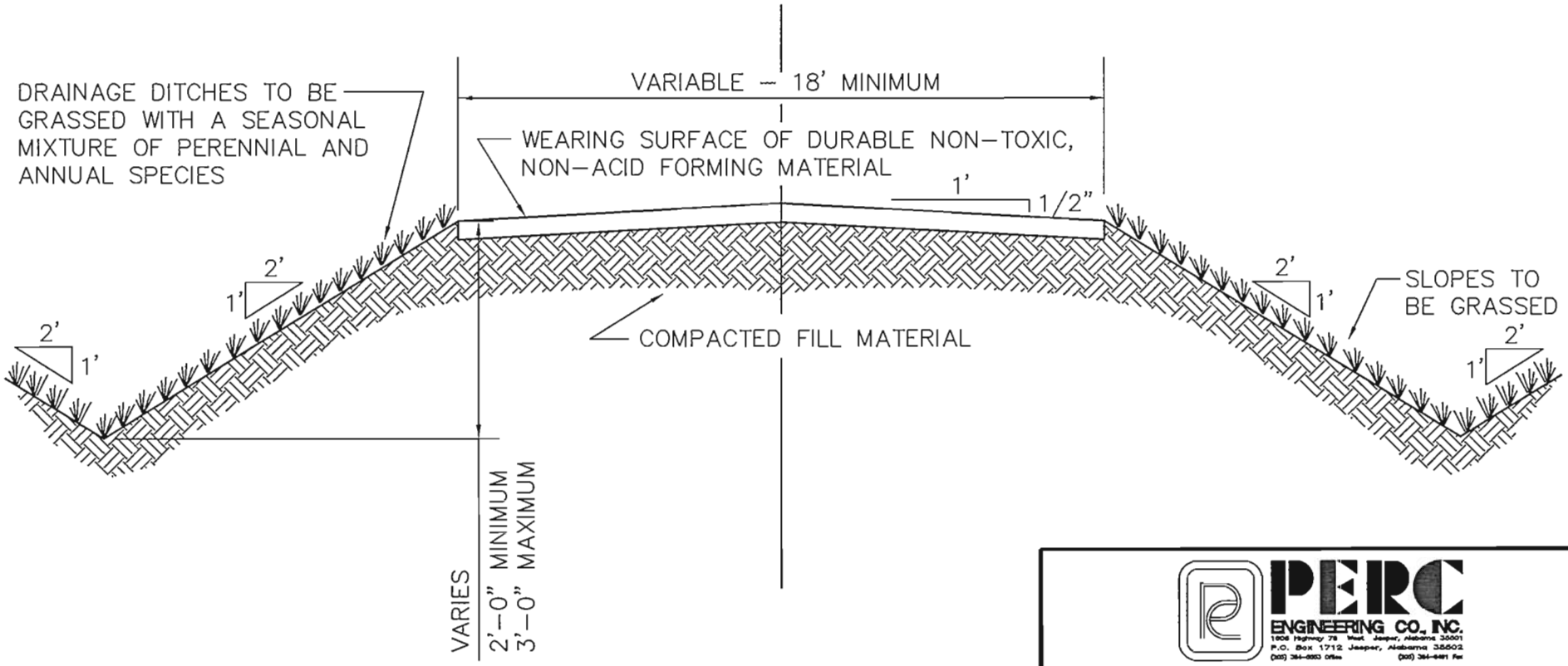

PERC ENGINEERING CO., INC.
1908 Highway 78 West Jasper, Alabama 35501
P.O. Box 1712 Jasper, Alabama 35502
(205) 384-8553 Office (205) 384-8481 Fax

TYPICAL FILL SECTION
PRIMARY HAUL ROAD

DRAWN BY:	K.D.P.	DATE:	2–3–97
DWG. NAME:	TYPHAULF		
APPROVED BY:	S.R.I.	SCALE:	NONE

ATTACHMENT III.–B.–5.

X:\S\TYPHAULF 02/03/97 16:01

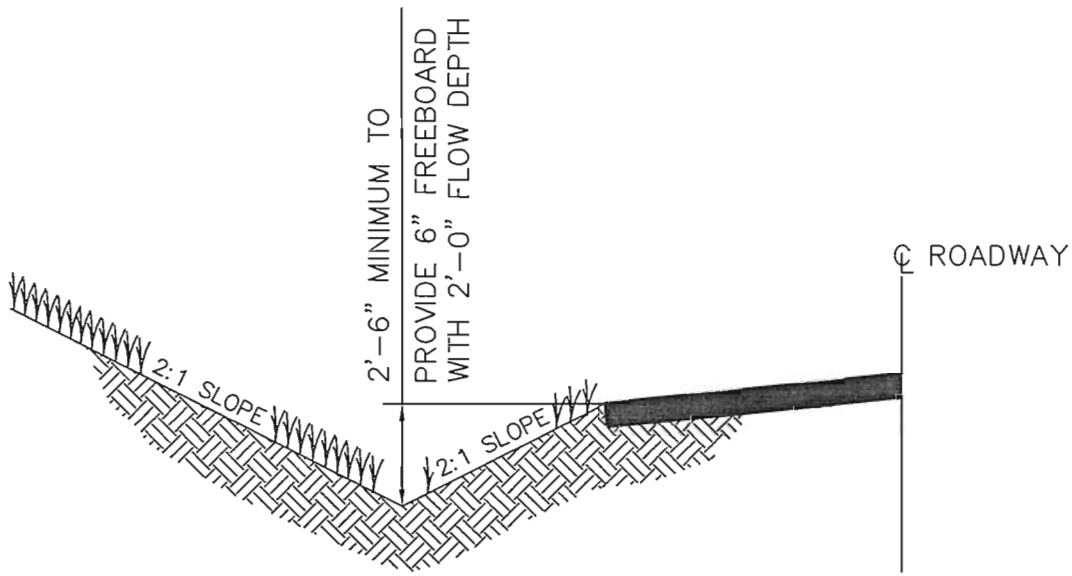

MINIMUM DITCH GRADIENT = 1%

MAXIMUM DITCH GRADIENT = 5%

DITCH CHANNEL TO BE VEGETATED WITH A MIXTURE OF BERMUDA GRASS, FESCUE, AND LESPEDEZA TO CONFORM TO CLASS "D" RETARDANT CLASS.

PERC ENGINEERING CO., INC.
1608 Highway 78 West Jasper, Alabama 35501
P.O. Box 1712 Jasper, Alabama 35502
(205) 384-6833 Office (205) 384-6481 Fax

TYPICAL PRIMARY ROADWAY DITCH CROSS SECTION

DRAWN BY:	K.D.P.	DATE:	2-4-97
DWG. NAME:	PRIMROAD		
APPROVED BY:	R.E.P.	SCALE:	NONE

K:\S\PRIMROAD 02/04/97 08:36

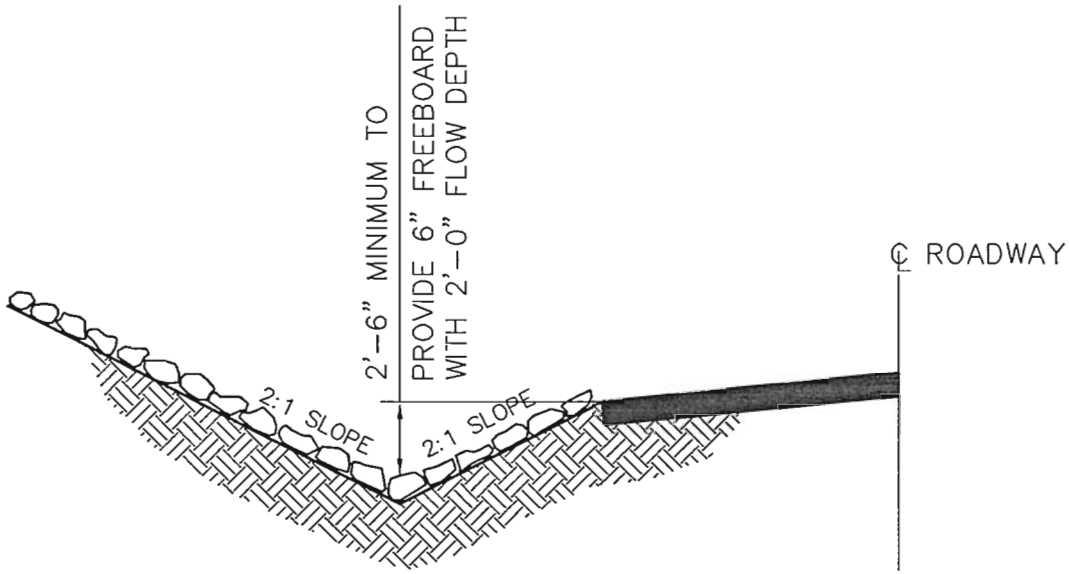

DITCH GRADIENT 5% TO 10%

DITCH CHANNEL TO BE LINED WITH NON-ERODIBLE NON-TOXIC, NON-ACID FORMING SANDSTONE OR LIMESTONE RIP-RAP. THE RIP-RAP WILL BE "CLASS 1" RIP-RAP AND HAVE A MINIMUM THICKNESS OF 12".

PERC ENGINEERING CO., INC.
1908 Highway 78 West Jasper, Alabama 35501
P.O. Box 1712 Jasper, Alabama 35502
(205) 384-8353 Office (205) 384-8491 Fax

TYPICAL PRIMARY ROADWAY DITCH CROSS SECTION

DRAWN BY:	S.D.M.	DATE:	11/8/2011
DWG. NAME:	PRIMRD1		
APPROVED BY:	L.G.S.	SCALE:	NONE

\\Perc600\perc_eng\Steve Vlies\Steve Does\Tplcels\Vi-B-5 Primary Road\Primrd1.dwg 11/08/11 09:43

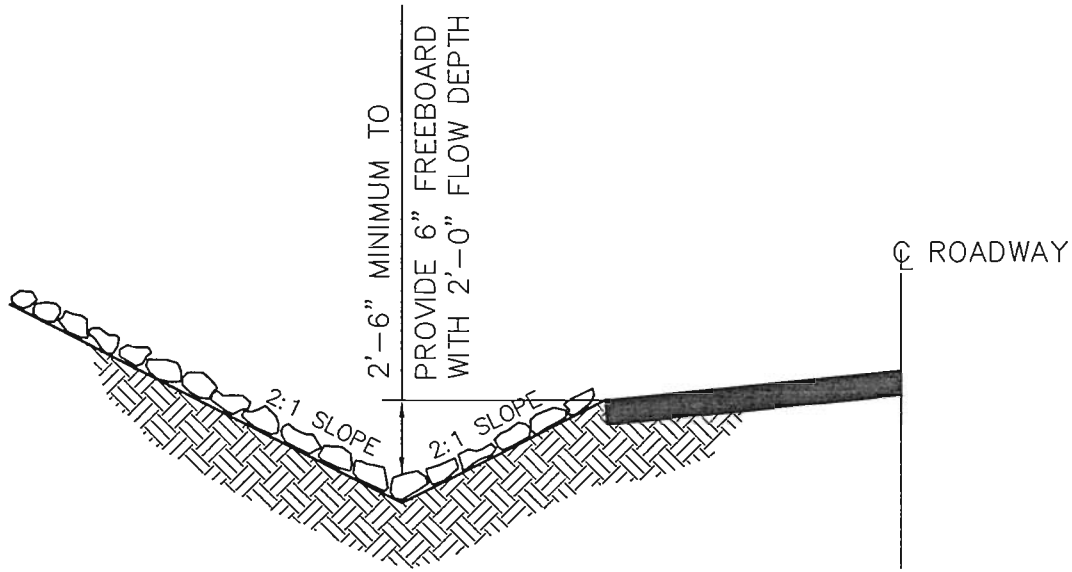

DITCH GRADIENT 11% TO 17%

DITCH CHANNEL TO BE LINED WITH NON-ERODIBLE NON-TOXIC, NON-ACID FORMING SANDSTONE OR LIMESTONE RIP-RAP. THE RIP-RAP WILL BE "CLASS 2" RIP-RAP AND HAVE A MINIMUM THICKNESS OF 16".

PERC ENGINEERING CO., INC.
1608 Highway 78 West Jasper, Alabama 35501
P.O. Box 1712 Jasper, Alabama 35502
(205) 384-6353 Office (205) 384-6481 Fax

TYPICAL PRIMARY ROADWAY DITCH CROSS SECTION

DRAWN BY:	S.D.M.	DATE:	11/8/2011
DWG. NAME:	PRIMRD2		
APPROVED BY:	L.G.S.	SCALE:	NONE

\\Perc600\perc_eng\Steve Miles\Steve Docs\Typicals\VII-B-5 Primary Road\Primrd2.dwg 11/08/11 09:41

NOTES

1) Primary Roads 1P and 2P are existing primary roads currently permitted and bonded under P-3768. Primary Roads 1P and 2P will be certified to the Regulatory Authority once all maintenance is performed to achieve the minimum design standards.

2) The existing bridge located at station 142+28 of Primary Road 1P will be removed and replaced by a stream crossing consisting of an earthen embankment with 10'x8' box culverts. The design of the stream crossing is located within these detailed design plans of Primary Road 1P. A Nationwide 14 Permit has been applied for with the U.S. Corps of Engineers for the stream crossing. Also, the “Low Water Crossing” permitted by P-3768 will be removed upon issuance of P-3972.

3) Due to there being no significant cut or fill, no stability analysis is required.

4) A stop sign will be placed 15’ from the edge of pavement of the County Road for the out going lane.

RIP-RAP CLASSIFICATION SPECIFICATIONS

CLASS 1 RIP-RAP

No more than 10% of the stone will have a diameter greater than twelve (12) inches; no more than 50% of the stone will have a diameter less than ten (10) inches; and no more than 10% of the stone will have a diameter of less than six (6) inches. The thickness of the rip-rap liner will be no less than twelve (12) inches.

CLASS 2 RIP-RAP

No more than 10% of the stone will have a diameter greater than sixteen (16) inches; no more than 50% of the stone will have a diameter less than twelve (12) inches; and no more than 10% of the stone will have a diameter of less than six (6) inches. The thickness of the rip-rap liner will be no less than sixteen (16) inches.

CLASS 3 RIP-RAP

No more than 10% of the stone will have a diameter greater than twenty two (22) inches; no more than 50% of the stone will have a diameter less than sixteen (16) inches; and no more than 10% of the stone will have a diameter of less than eight (8) inches. The thickness of the rip-rap liner will be no less than twenty two (22) inches.

CLASS 4 RIP-RAP

No more than 10% of the stone will have a diameter greater than twenty seven (27) inches; no more than 50% of the stone will have a diameter less than twenty two (22) inches; and no more than 10% of the stone will have a diameter of less than ten (10) inches. The thickness of the rip-rap liner will be no less than twenty seven (27) inches.

CLASS 5 RIP-RAP

No more than 10% of the stone will have a diameter greater than thirty four (34) inches; no more than 50% of the stone will have a diameter less than twenty seven (27) inches; and no more than 10% of the stone will have a diameter of less than sixteen (16) inches. The thickness of the rip-rap liner will be no less than thirty four (34) inches.

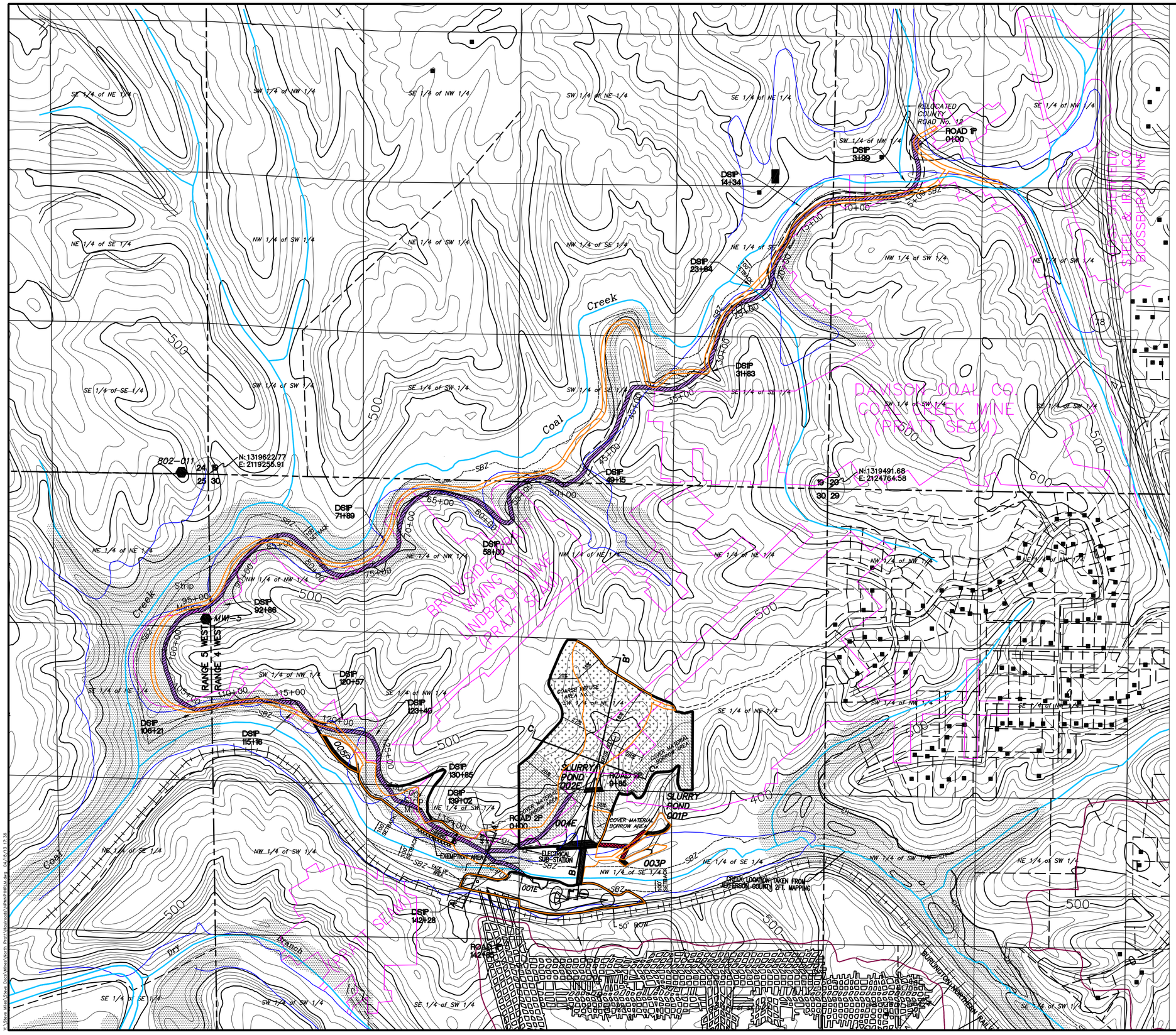

LEGEND

- A — A' Reclamation Cross Section
- Permit Boundary
- 400 Surface Contour
- 001 Sediment Basin
- Natural Drainage Course
- Perennial Stream
- Intermittent Stream
- 12% Land Slope Measurement
- EH Existing Highwall
- Projected Pratt Coal Seam Outcrop
- Coal Stockpile
- Diversion Ditch, Berm, or Low Wall
- County Road (Paved unless otherwise designated)
- Road (Private unless otherwise shown)
- Area Previously Surface Mined By Others
- (M) Indicates Mineral Ownership
- (S) Indicates Surface Ownership
- (FEE) Indicates Surface & Mineral Ownership
- 1243 Ground Water Monitoring Site
- Occupied Dwelling
- Coal Washer
- Primary Road
- Ancillary Road
- Private Pond
- Coarse Refuse Disposal Site Number 1
- Cover Material Borrow Area
- Abandoned Power Transmission Line
- Power Substation Site
- Silt Fencing
- I Proposed Injection Well Site
- W Proposed Withdrawal Well Site
- SBZ Stream Buffer Zone
- Sunrise Coal Co., LLC Pratt Mine (ASMC Permit No. P-3768)
- Existing Underground Works Sunrise Coal Co., LLC Pratt Mine (ASMC Permit No. P-3768)

PERC ENGINEERING CO., INC.
1606 Hwy. 78 West Jasper, AL 35501/P.O. Box 1712-35502
(205) 384-5553 Office (205) 384-9491 Fax

drawn by: S.D.M.
dwg name: NPMP1HRLM
scale: 1" = 600'
mathematical closure:
field survey:

Attachment III-B-5
Primary Road Location Map
North Pratt Mining, LLC
Pratt No. 1 Mine
P-3972

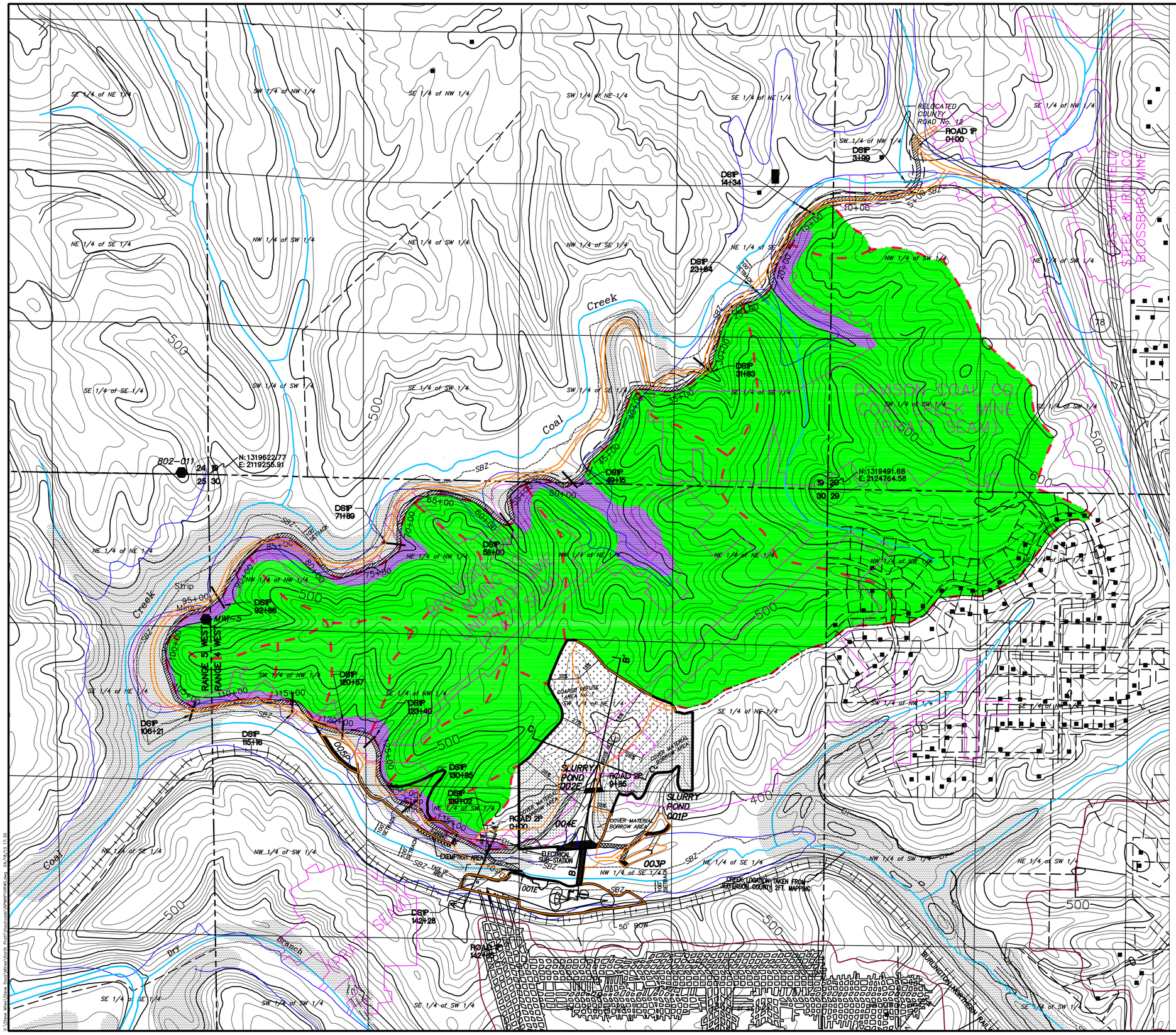

LEGEND

- A — A' Reclamation Cross Section
- Permit Boundary
- 400 Surface Contour
- 001 Sediment Basin
- Natural Drainage Course
- Perennial Stream
- Intermittent Stream
- 12% Land Slope Measurement
- EH Existing Highwall
- Projected Pratt Coal Seam Outcrop
- Coal Stockpile
- Diversion Ditch, Berm, or Low Wall
- County Road (Paved unless otherwise designated)
- Road (Private unless otherwise shown)
- Area Previously Surface Mined By Others
- (M) Indicates Mineral Ownership
- (S) Indicates Surface Ownership
- (FEE) Indicates Surface & Mineral Ownership
- 1243 Ground Water Monitoring Site
- Occupied Dwelling
- Coal Washer
- Primary Road
- Ancillary Road
- Private Pond
- Coarse Refuse Disposal Site Number 1
- Cover Material Borrow Area
- Abandoned Power Transmission Line
- Power Substation Site
- Silt Fencing
- I Proposed Injection Well Site
- W Proposed Withdrawal Well Site
- SBZ Stream Buffer Zone
- Sunrise Coal Co., LLC Pratt Mine (ASMC Permit No. P-3768)
- Existing Underground Works Sunrise Coal Co., LLC Pratt Mine (ASMC Permit No. P-3768)
- Drainage Divide

LANDUSE & CURVE NUMBER INFORMATION

- Unmanaged Timberland, Curve Number 70
- Previous Mining Disturbance, Curve Number 68

PERC ENGINEERING CO., INC.
1606 Hwy. 78 West Jasper, AL 35501/P.O. Box 1712-35502
(205) 384-5553 Office (205) 384-9491 Fax

drawn by: S.D.M.
dwg name: NPMP1HRWS
scale: 1" = 600'
mathematical closure:
field survey:

Attachment III-B-5
Watershed Map
North Pratt Mining, LLC
Pratt No. 1 Mine
P-3972

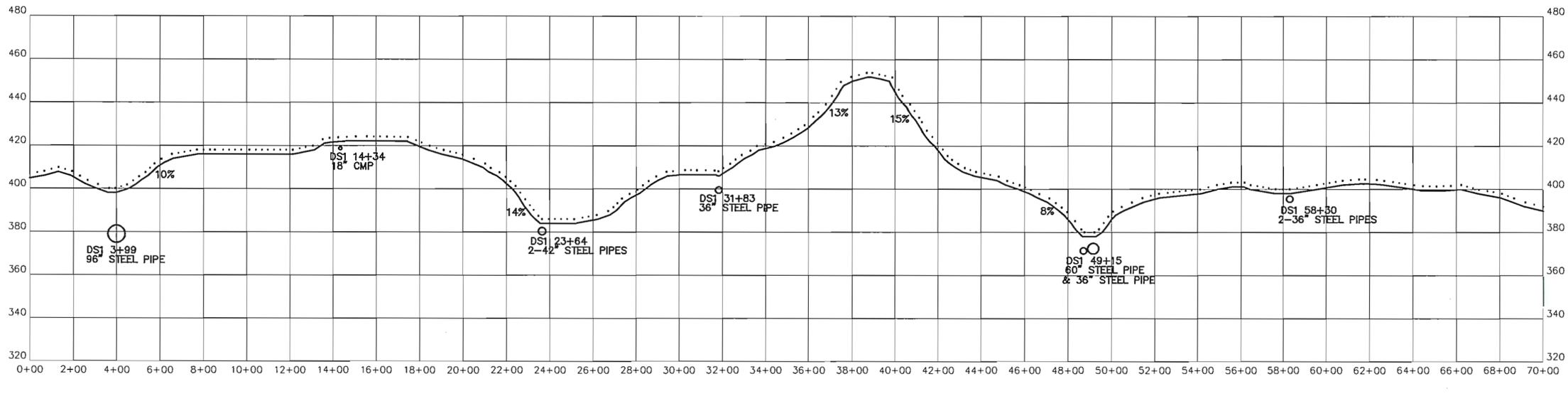

Primary Road 1P

LEGEND

——— *EXISTING GRADE*

····· *PROPOSED GRADE*

HORIZONTAL SCALE: 1"=500'
VERTICAL SCALE: 1"=50'

NOTES:

1. *FINISHED GRADES SHOWN HEREON MAY VARY FROM BETWEEN 0% AND 17%.*

PERC ENGINEERING CO., INC.
1606 Highway 78 West Jasper, Alabama 35501
P.O. Box 1712 Jasper, Alabama 35502
(205) 384-5533 Office (205) 293-3111 Fax

NORTH PRATT MINING, LLC
PRATT NO. 1 MINE
P-3972
PRIMARY ROAD 1P PROFILE
1 OF 2

DRAWN BY: S.D.M. DWG. NAME: NPMNPHR1P	DATE: 3/15/2013
APPROVED BY: S.D.M.	SCALE: AS NOTED

V:\Steve Miles\Steve Docs\Mines\North Pratt\Haulroads\NPMNPHR1P.dwg 03/15/13 15:47

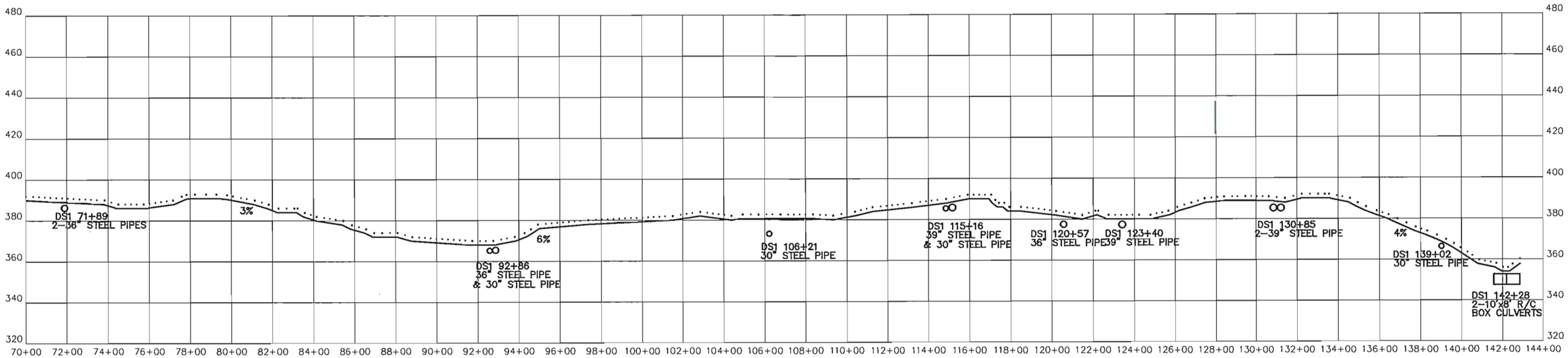

Primary Road 1P

LEGEND

——— *EXISTING GRADE*

····· *PROPOSED GRADE*

HORIZONTAL SCALE: 1"=500'
VERTICAL SCALE: 1"=50'

NOTES:

1. *FINISHED GRADES SHOWN HEREON MAY VARY FROM BETWEEN 0% AND 17%.*

PERC ENGINEERING CO., INC.
1606 Highway 78 West Jasper, Alabama 35501
P.O. Box 1712 Jasper, Alabama 35502
(205) 384-3553 Office (205) 291-3114 Fax

NORTH PRATT MINING, LLC
PRATT NO. 1 MINE
P-3972
PRIMARY ROAD 1P PROFILE
2 OF 2

DRAWN BY: S.D.M. DWG. NAME: NPMNPHR1P	DATE: 3/15/2013
APPROVED BY: S.D.M.	SCALE: AS NOTED

V:\Steve Mike\Steve Docs\Mines\North Pratt\Roadroads\NPMNPHR1P.dwg 03/15/13 15:47

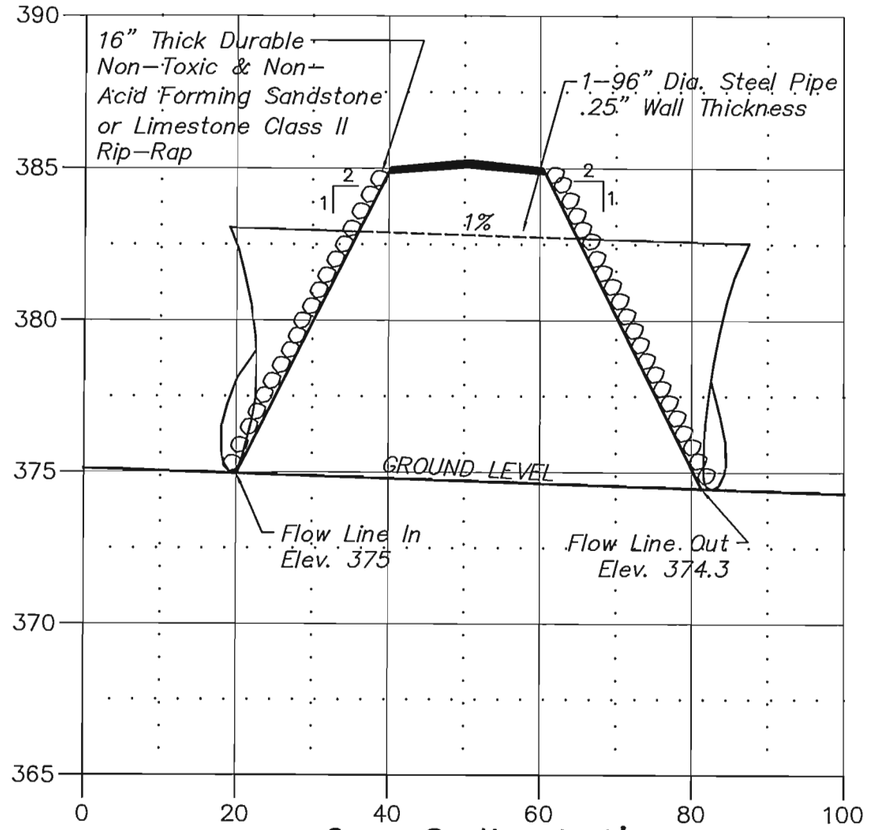

Cross Section A-A'

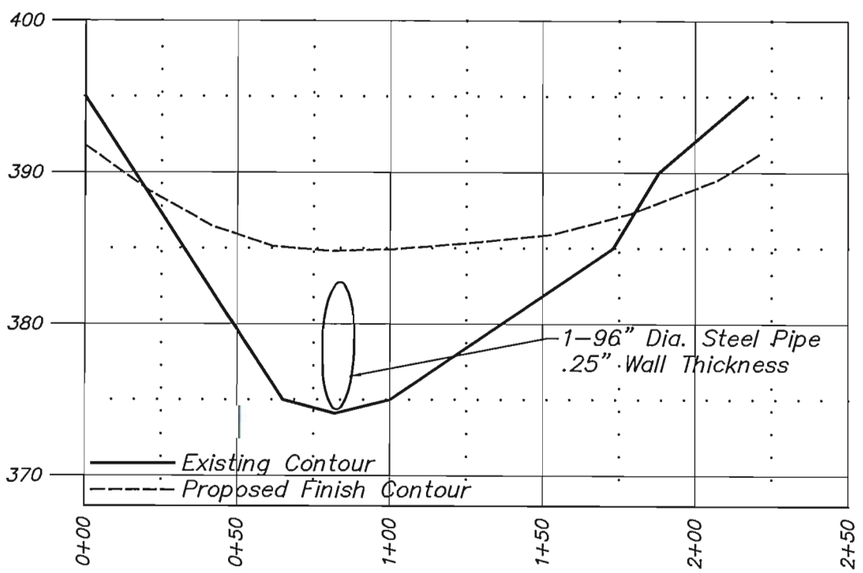

Cross Section B-B'

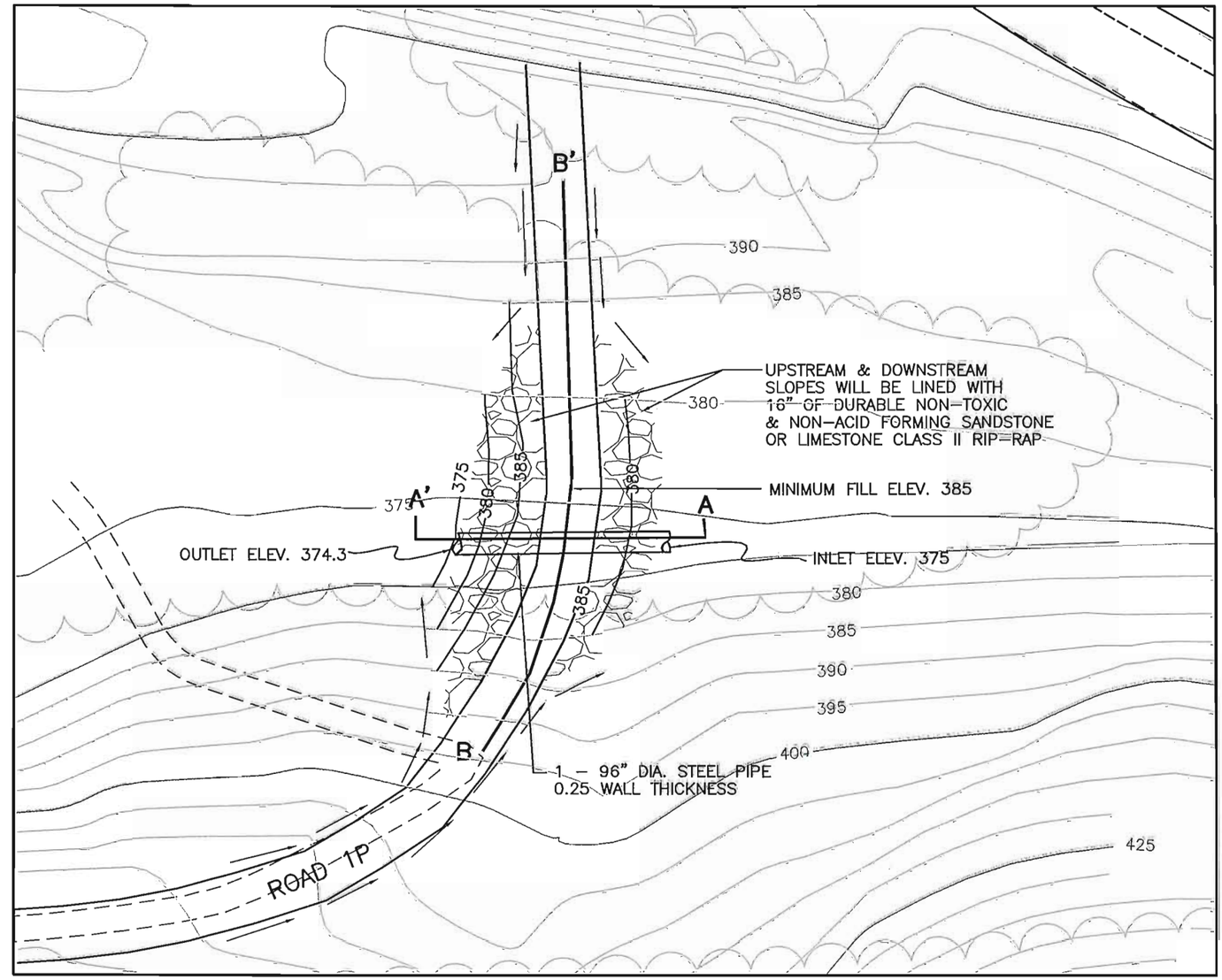

Map Legend

- Road Ditch
- Existing Contour
- Proposed Finish Contour

Plan View

SCALE: 1" = 50'

Hydraulics Information

Drainage Area = 826.0 Acres
10YR-6HR Q = 452.5 C.F.S.
Maximum Water Elev. = 384
Minimum Fill Elev. = 385
Wall Thickness = 0.25"
Minimum Freeboard = 1'

PERC ENGINEERING CO. INC.

NORTH PRATT MINING, LLC
PRATT NO. 1 MINE
P-3972
PRIMARY ROAD 1P
DS1P 3+99

DRAWN BY: S.D.M. DWG. NAME: NPMNPHR3+99	DATE: 3/6/2013
APPROVED BY: S.D.M.	SCALE: 1" = 50'

J:\Steve Mines\Steve Docs\Mines\North Pratt\Haulroads\PRJNPHR3+99.DWG 03/06/13 11:05

Copyright 1998 -2006 Pamela L Schwab

North Pratt Mining, LLC
Pratt No. 1 Mine
P-3972
DS1 3+99

4.3 Inches, 10 Year - 6 Hour

SCS 6 Hour Event

SDM

PERC Engineering Co., Inc.
1606 Highway 78 West
Jasper, AL 35501

Phone: (205) 384-5553
Email: smiles@percengineering.com

General Information

Storm Information:

Storm Type:	Rainfall Event

Accumulated Time (hrs)	Accumulated Depth (in)
0.00	0.0000
0.50	0.1510
1.00	0.3440
1.50	0.5810
2.00	0.9890
2.50	2.5800
3.00	3.0100
3.50	3.3540
4.00	3.5910
4.50	3.8060
5.00	3.9780
5.50	4.1500
6.00	4.3000

Peak 30-minute Intensity: 3.182 in/hr

Structure Networking:

Type	Stru #	(flows into)	Stru #	Musk. K (hrs)	Musk. X	Description
Culvert	#1	==>	End	0.000	0.000	DS 1 3+99

#1
Culvert

Structure Summary:

	Immediate Contributing Area (ac)	Total Contributing Area (ac)	Peak Discharge (cfs)	Total Runoff Volume (ac-ft)
#1	826.000	826.000	429.58	79.39

Structure Detail:

Structure #1 (Culvert)

DS 1 3+99

Culvert Inputs:

Length (ft)	Slope (%)	Manning's n	Max. Headwater (ft)	Tailwater (ft)	Entrance Loss Coef. (Ke)
100.00	1.00	0.0160	9.00	0.00	0.90

Culvert Results:

Design Discharge = 429.58 cfs

Minimum pipe diameter: 1 - 96 inch pipe(s) required

Subwatershed Hydrology Detail:

Stru #	SWS #	SWS Area (ac)	Time of Conc (hrs)	Musk K (hrs)	Musk X	Curve Number	UHS	Peak Discharge (cfs)	Runoff Volume (ac-ft)
#1	1	165.000	0.285	0.347	0.350	75.000	M	172.51	20.834
	2	275.000	0.476	0.317	0.350	68.000	M	160.10	25.579
	3	386.000	0.648	0.000	0.000	70.000	S	131.28	32.980
	$\sum$	**826.000**						**429.58**	**79.394**

Subwatershed Time of Concentration Details:

Stru #	SWS #	Land Flow Condition	Slope (%)	Vert. Dist. (ft)	Horiz. Dist. (ft)	Velocity (fps)	Time (hrs)
#1	1	3. Short grass pasture	2.50	5.00	200.00	1.260	0.044
		8. Large gullies, diversions, and low flowing streams	2.12	35.00	1,650.00	4.360	0.105
#1	**1**	**Time of Concentration:**					**0.285**
#1	2	5. Nearly bare and untilled, and alluvial valley fans	5.00	10.00	200.00	2.230	0.024
		8. Large gullies, diversions, and low flowing streams	9.26	150.00	1,620.00	9.120	0.049
#1	**2**	**Time of Concentration:**					**0.476**

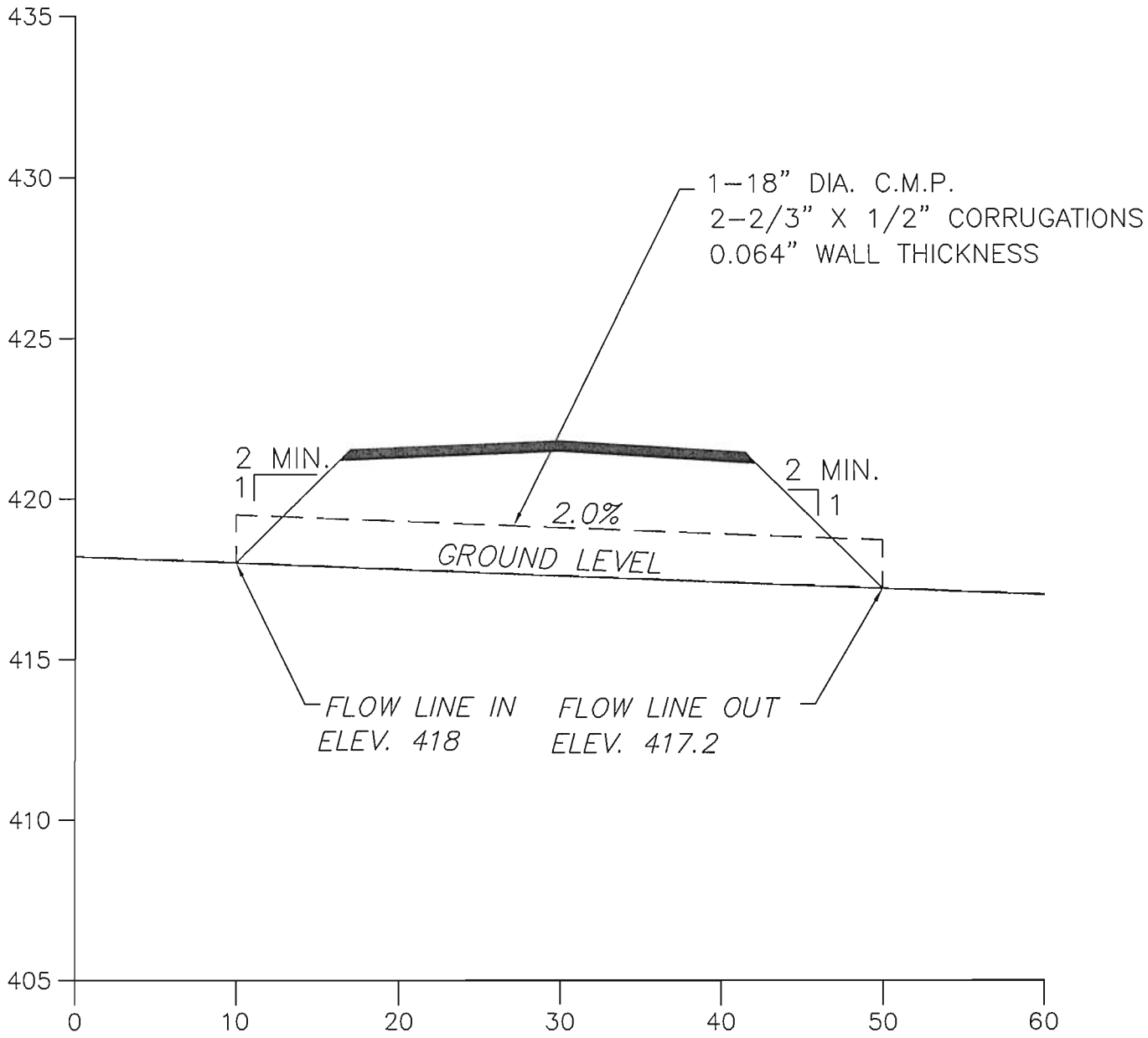

Hydraulics Information

Drainage Area = 4.9 Acres
10 YR.-6 HR., Q = 7.4 C.F.S.
Maximum Water Elev. = 420.4
Minimum Fill Elev. = 421.4
Minimum Freeboard = 1'
Maximum Allowable Cover 18" C.M.P. 166'
Minimum Allowable Cover 18" C.M.P. = 1'
Wall Thickness = 0.064"

PERC ENGINEERING CO., INC.
1606 Highway 78 West Jasper, Alabama 35501
P.O. Box 1712 Jasper, Alabama 35502
(205) 384-5553 Office (205) 384-9491 Fax

NORTH PRATT MINING, LLC
PRATT NO. 1 MINE
P-3972
PRIMARY ROAD 1P CROSS SECTION
DS1 14+34

DRAWN BY: S.D.M. DWG. NAME: NPMNPHR1CS	DATE: 3/5/2013
APPROVED BY: S.D.M.	SCALE: AS NOTED

V:\Steve Miles\Steve Docs\Mines\North Pratt\Inquiries\NPMNPHR1CS.dwg 03/05/13 16:14

Copyright 1998 -2006 Pamela L Schwab

North Pratt Mining, LLC

Pratt No. 1 Mine

P-3972

DS1 14+34

4.3 Inches, 10 Year - 6 Hour

SCS 6 Hour Event

SDM

PERC Engineering Co., Inc.
1606 Highway 78 West
Jasper, AL 35501

Phone: (205) 384-5553
Email: smiles@percengineering.com

General Information

Storm Information:

Storm Type:	Rainfall Event

Accumulated Time (hrs)	Accumulated Depth (in)
0.00	0.0000
0.50	0.1510
1.00	0.3440
1.50	0.5810
2.00	0.9890
2.50	2.5800
3.00	3.0100
3.50	3.3540
4.00	3.5910
4.50	3.8060
5.00	3.9780
5.50	4.1500
6.00	4.3000

Peak 30-minute Intensity: 3.182 in/hr

Structure Networking:

Type	Stru #	(flows into)	Stru #	Musk. K (hrs)	Musk. X	Description
Culvert	#1	==>	End	0.000	0.000	DS 1 14+34

#1
Culvert

Structure Summary:

	Immediate Contributing Area (ac)	Total Contributing Area (ac)	Peak Discharge (cfs)	Total Runoff Volume (ac-ft)
#1	4.900	4.900	7.44	0.62

Structure Detail:

Structure #1 (Culvert)

DS 1 14+34

Culvert Inputs:

Length (ft)	Slope (%)	Manning's n	Max. Headwater (ft)	Tailwater (ft)	Entrance Loss Coef. (Ke)
50.00	2.00	0.0240	2.40	0.00	0.90

Culvert Results:

Design Discharge = 7.44 cfs

Minimum pipe diameter: 1 - 18 inch pipe(s) required

Subwatershed Hydrology Detail:

Stru #	SWS #	SWS Area (ac)	Time of Conc (hrs)	Musk K (hrs)	Musk X	Curve Number	UHS	Peak Discharge (cfs)	Runoff Volume (ac-ft)
#1	1	0.500	0.011	0.005	0.426	68.000	M	0.70	0.058
	2	4.400	0.055	0.000	0.000	70.000	M	6.74	0.559
	$\sum$	**4.900**						**7.44**	**0.616**

Subwatershed Time of Concentration Details:

Stru #	SWS #	Land Flow Condition	Slope (%)	Vert. Dist. (ft)	Horiz. Dist. (ft)	Velocity (fps)	Time (hrs)
#1	1	3. Short grass pasture	25.00	40.00	160.00	4.000	0.011
#1	**1**	**Time of Concentration:**					**0.011**
#1	2	1. Forest with heavy ground litter	20.00	40.00	200.00	1.130	0.049
		8. Large gullies, diversions, and low flowing streams	30.00	120.00	400.00	16.430	0.006
#1	**2**	**Time of Concentration:**					**0.055**

Subwatershed Muskingum Routing Details:

Stru #	SWS #	Land Flow Condition	Slope (%)	Vert. Dist. (ft)	Horiz. Dist. (ft)	Velocity (fps)	Time (hrs)
#1	1	8. Large gullies, diversions, and low flowing streams	10.53	20.00	190.00	9.730	0.005
#1	**1**	**Muskingum K:**					**0.005**

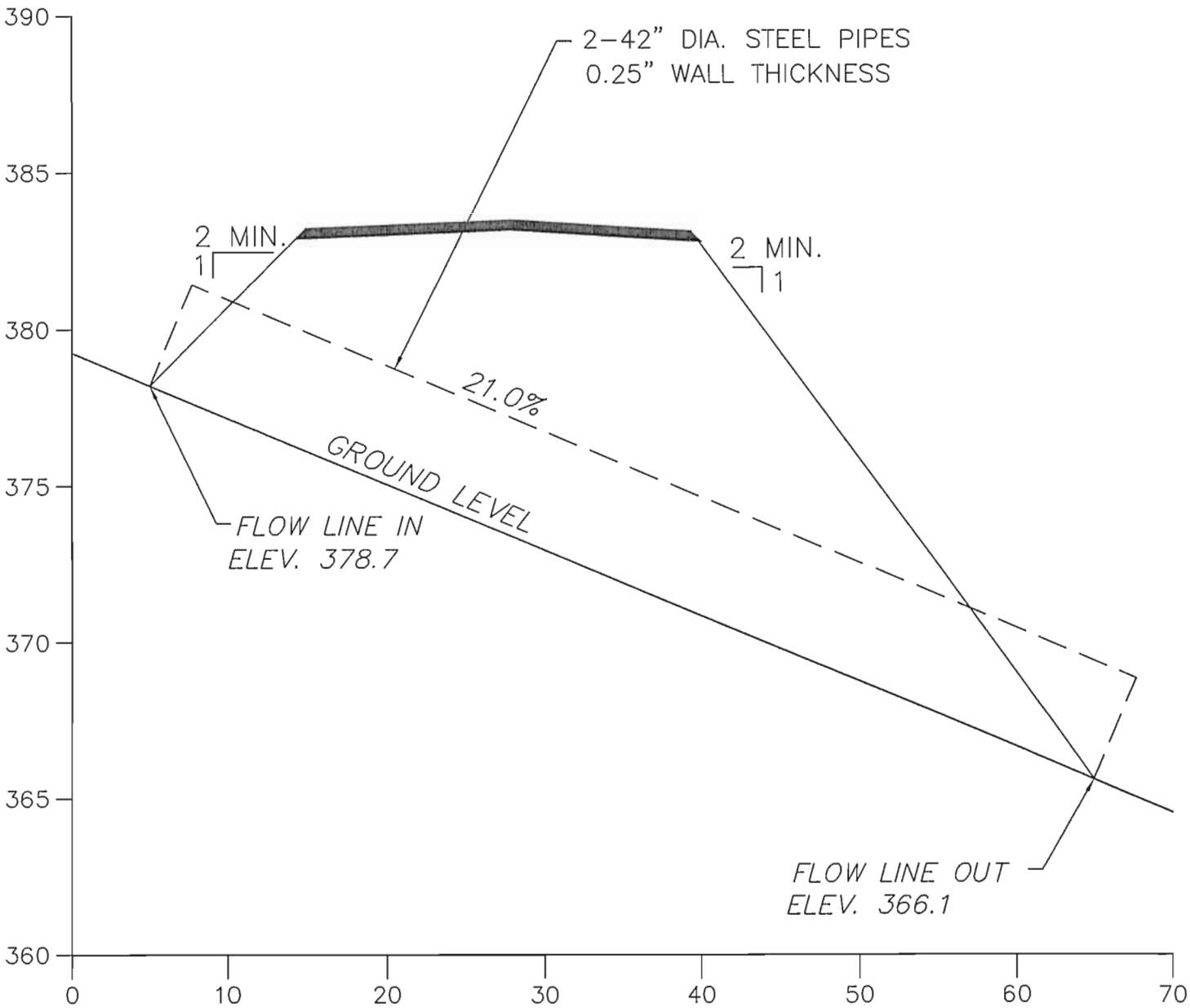

Hydraulics Information

Drainage Area = 161.1 Acres
10 YR.-6 HR., Q = 82.1 C.F.S.
Maximum Water Elev. = 383
Minimum Fill Elev. = 384
Minimum Freeboard = 1'

PERC ENGINEERING CO., INC.
1606 Highway 78 West Jasper, Alabama 35501
P.O. Box 1712 Jasper, Alabama 35502
(205) 384-5563 Office (205) 384-9481 Fax

NORTH PRATT MINING, LLC
PRATT NO. 1 MINE
P-3972
PRIMARY ROAD 1P CROSS SECTION
DS1 23+64

DRAWN BY: S.D.M. DWG. NAME: NPMNPHR1CS	DATE: 3/6/2013
APPROVED BY: S.D.M.	SCALE: AS NOTED

v:\Steve Mines\Steve Docs\Mines\North Pratt\Visual cad\NPMNPHR1CS.dwg 03/05/13 16:14

Copyright 1998 -2006 Pamela L Schwab

North Pratt Mining, LLC

Pratt No. 1 Mine

P-3972

DS1 23+64

4.3 Inches, 10 Year - 6 Hour

SCS 6 Hour Event

SDM

PERC Engineering Co., Inc.
1606 Highway 78 West
Jasper, AL 35501

Phone: (205) 384-5553
Email: smiles@percengineering.com

General Information

Storm Information:

Storm Type:	Rainfall Event

Accumulated Time (hrs)	Accumulated Depth (in)
0.00	0.0000
0.50	0.1510
1.00	0.3440
1.50	0.5810
2.00	0.9890
2.50	2.5800
3.00	3.0100
3.50	3.3540
4.00	3.5910
4.50	3.8060
5.00	3.9780
5.50	4.1500
6.00	4.3000

Peak 30-minute Intensity: 3.182 in/hr

Structure Networking:

Type	Stru #	(flows into)	Stru #	Musk. K (hrs)	Musk. X	Description
Culvert	#1	==>	End	0.000	0.000	DS 1 23+64

#1
Culvert

Structure Summary:

	Immediate Contributing Area (ac)	Total Contributing Area (ac)	Peak Discharge (cfs)	Total Runoff Volume (ac-ft)
#1	161.100	161.100	82.05	13.93

Structure Detail:

Structure #1 (Culvert)

DS 1 23+64

Culvert Inputs:

Length (ft)	Slope (%)	Manning's n	Max. Headwater (ft)	Tailwater (ft)	Entrance Loss Coef. (Ke)
60.00	21.00	0.0160	4.30	0.00	0.90

Culvert Results:

Design Discharge = 82.05 cfs

Minimum pipe diameter: 1 - 54 inch pipe(s) required

USE 2 - 42" STEEL PIPES

AREA (54") = $\pi r^2 = \pi (54''/2)^2 = 2290.2$ IN^2

AREA (2-42") = $2\pi r^2 = \pi (42''/2)^2 \times 2 = 2770.9$ IN^2

Subwatershed Hydrology Detail:

Stru #	SWS #	SWS Area (ac)	Time of Conc (hrs)	Musk K (hrs)	Musk X	Curve Number	UHS	Peak Discharge (cfs)	Runoff Volume (ac-ft)
#1	1	4.600	0.029	0.002	0.439	68.000	M	6.43	0.532
	2	156.500	0.316	0.000	0.000	70.000	S	80.12	13.401
	$\sum$	**161.100**						**82.05**	**13.933**

Subwatershed Time of Concentration Details:

Stru #	SWS #	Land Flow Condition	Slope (%)	Vert. Dist. (ft)	Horiz. Dist. (ft)	Velocity (fps)	Time (hrs)
#1	1	3. Short grass pasture	25.00	50.00	200.00	4.000	0.013
		8. Large gullies, diversions, and low flowing streams	5.00	20.00	400.00	6.700	0.016
#1	**1**	**Time of Concentration:**					**0.029**
#1	2	1. Forest with heavy ground litter	5.00	10.00	200.00	0.560	0.099
		8. Large gullies, diversions, and low flowing streams	2.63	100.00	3,800.11	4.860	0.217
#1	**2**	**Time of Concentration:**					**0.316**

Subwatershed Muskingum Routing Details:

Stru #	SWS #	Land Flow Condition	Slope (%)	Vert. Dist. (ft)	Horiz. Dist. (ft)	Velocity (fps)	Time (hrs)
#1	1	8. Large gullies, diversions, and low flowing streams	16.67	20.00	120.00	12.240	0.002
#1	**1**	**Muskingum K:**					**0.002**

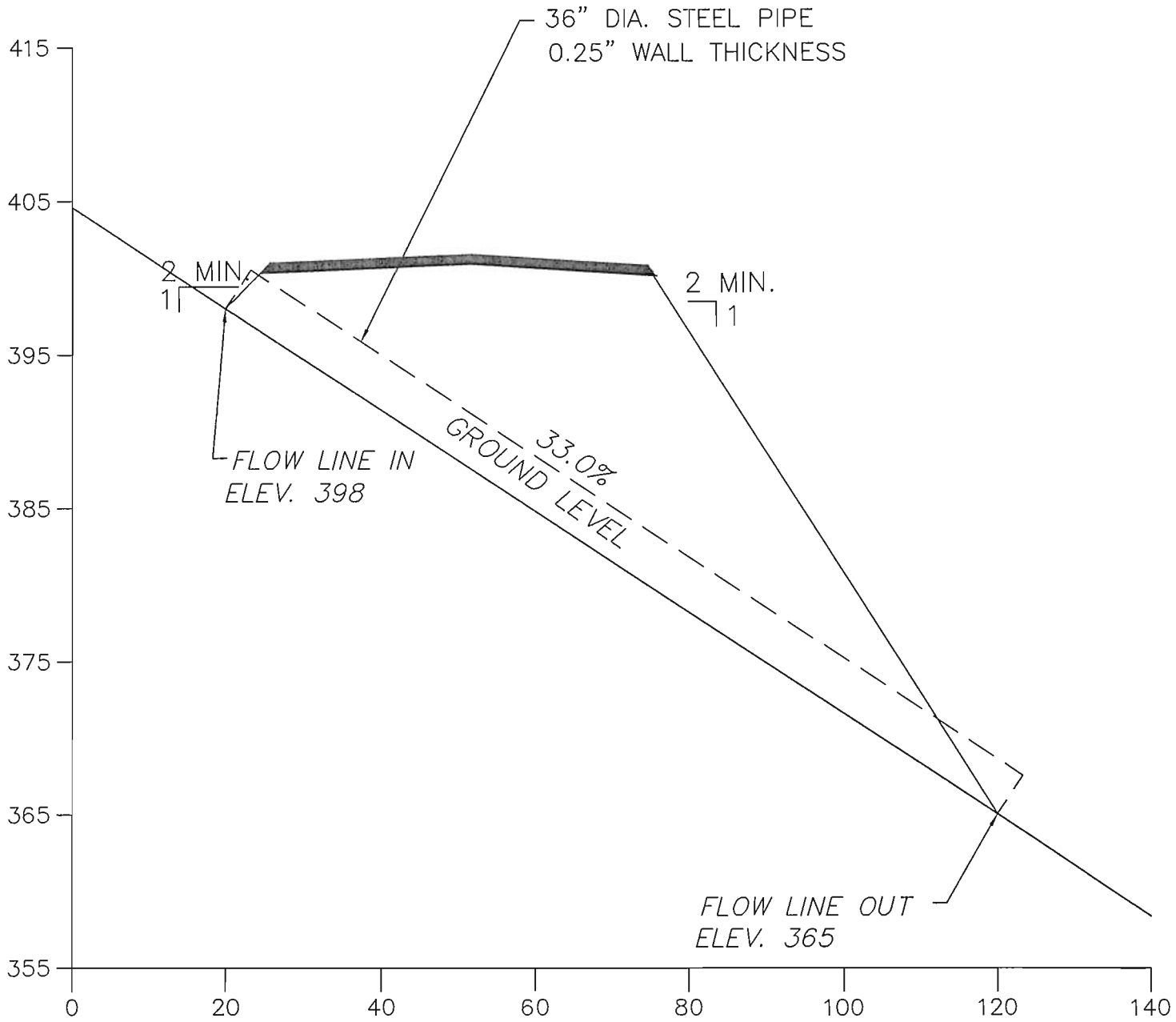

Hydraulics Information

Drainage Area = 14.6 Acres
10 YR.–6 HR., Q = 22.4 C.F.S.
Maximum Water Elev. = 400.5
Minimum Fill Elev. = 401.5
Minimum Freeboard = 1'

PERC ENGINEERING CO., INC.
1606 Highway 78 West Jasper, Alabama 35501
P.O. Box 1712 Jasper, Alabama 35502
(205) 384-3553 Office (205) 384-9431 Fax

NORTH PRATT MINING, LLC
PRATT NO. 1 MINE
P-3972
PRIMARY ROAD 1P CROSS SECTION
DS1 31+83

DRAWN BY: S.D.M. DWG. NAME: NPMNPHR1CS	DATE: 3/6/2013
APPROVED BY: S.D.M.	SCALE: AS NOTED

V:\Steve Miles\Steve Docs\Mines\North Pratt\Viewpoints\PratNPHR1CS.dwg 03/05/13 16:14

North Pratt Mining, LLC
Pratt No. 1 Mine
P-3972
DS1 31+83

4.3 Inches, 10 Year - 6 Hour

SCS 6 Hour Event

SDM

PERC Engineering Co., Inc.
1606 Highway 78 West
Jasper, AL 35501

Phone: (205) 384-5553
Email: smiles@percengineering.com

General Information

Storm Information:

Storm Type:	Rainfall Event

Accumulated Time (hrs)	Accumulated Depth (in)
0.00	0.0000
0.50	0.1510
1.00	0.3440
1.50	0.5810
2.00	0.9890
2.50	2.5800
3.00	3.0100
3.50	3.3540
4.00	3.5910
4.50	3.8060
5.00	3.9780
5.50	4.1500
6.00	4.3000

Peak 30-minute Intensity: 3.182 in/hr

Structure Networking:

Type	Stru #	(flows into)	Stru #	Musk. K (hrs)	Musk. X	Description
Culvert	#1	==>	End	0.000	0.000	DS 1 31+83

#1
Culvert

Structure Summary:

	Immediate Contributing Area (ac)	Total Contributing Area (ac)	Peak Discharge (cfs)	Total Runoff Volume (ac-ft)
#1	14.600	14.600	22.36	1.85

Structure Detail:

Structure #1 (Culvert)

DS 1 31+83

Culvert Inputs:

Length (ft)	Slope (%)	Manning's n	Max. Headwater (ft)	Tailwater (ft)	Entrance Loss Coef. (Ke)
100.00	33.00	0.0160	2.50	0.00	0.90

Culvert Results:

Design Discharge = 22.36 cfs

Minimum pipe diameter: 1 - 36 inch pipe(s) required

Subwatershed Hydrology Detail:

Stru #	SWS #	SWS Area (ac)	Time of Conc (hrs)	Musk K (hrs)	Musk X	Curve Number	UHS	Peak Discharge (cfs)	Runoff Volume (ac-ft)
#1	1	14.600	0.031	0.000	0.000	70.000	M	22.36	1.853
	$\sum$	**14.600**						**22.36**	**1.853**

Subwatershed Time of Concentration Details:

Stru #	SWS #	Land Flow Condition	Slope (%)	Vert. Dist. (ft)	Horiz. Dist. (ft)	Velocity (fps)	Time (hrs)
#1	1	1. Forest with heavy ground litter	40.00	40.00	100.00	1.600	0.017
		8. Large gullies, diversions, and low flowing streams	20.00	140.00	700.00	13.410	0.014
#1	**1**	**Time of Concentration:**					**0.031**

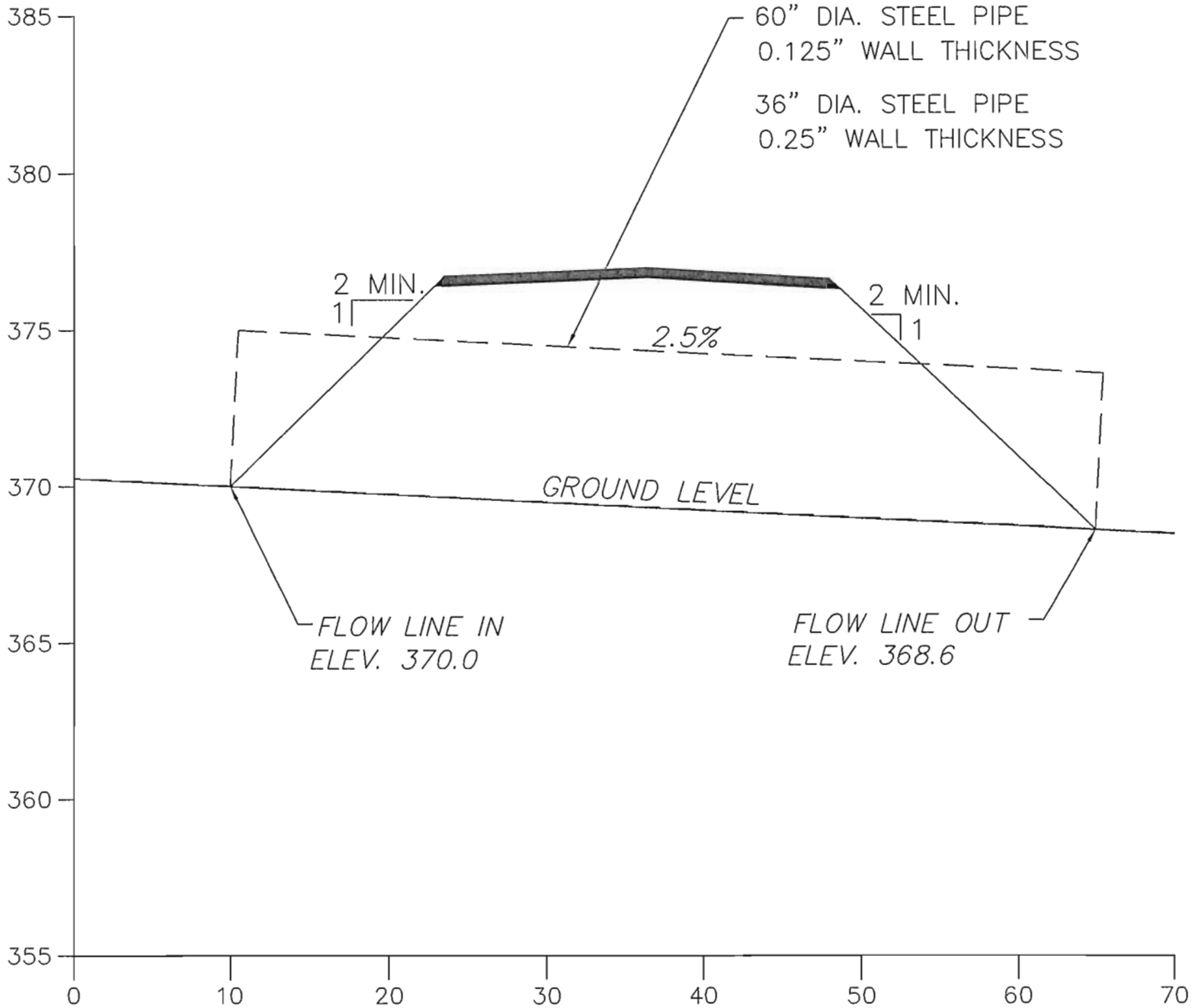

Hydraulics Information

Drainage Area = 102.5 Acres
10 YR.–6 HR., Q = 145.1 C.F.S.
Maximum Water Elev. = 376.0
Minimum Fill Elev. = 377.0
Minimum Freeboard = 1'

PERC ENGINEERING CO., INC.
1606 Highway 78 West Jasper, Alabama 35501
P.O. Box 1712 Jasper, Alabama 35502
(205) 384-3353 Office (205) 384-9451 Fax

NORTH PRATT MINING, LLC
PRATT NO. 1 MINE
P-3972
PRIMARY ROAD 1P CROSS SECTION
DS1 49+15

DRAWN BY: S.D.M. DWG. NAME: NPMNPHR1CS	DATE: 3/5/2013
APPROVED BY: S.D.M.	SCALE: AS NOTED

v:\Steve Weet\Steve Docs\Mines\North Pratt\Prelims\PrPrs\PrHR1CS.dwg 03/05/13 16:14

Copyright 1998 -2006 Pamela L Schwab

North Pratt Mining, LLC

Pratt No. 1 Mine

P-3972

DS1 49+15

4.3 Inches, 10 Year - 6 Hour

SCS 6 Hour Event

SDM

PERC Engineering Co., Inc.
1606 Highway 78 West
Jasper, AL 35501

Phone: (205) 384-5553
Email: smiles@percengineering.com

General Information

Storm Information:

Storm Type:	Rainfall Event

Accumulated Time (hrs)	Accumulated Depth (in)
0.00	0.0000
0.50	0.1510
1.00	0.3440
1.50	0.5810
2.00	0.9890
2.50	2.5800
3.00	3.0100
3.50	3.3540
4.00	3.5910
4.50	3.8060
5.00	3.9780
5.50	4.1500
6.00	4.3000

Peak 30-minute Intensity: 3.182 in/hr

Structure Networking:

Type	Stru #	(flows into)	Stru #	Musk. K (hrs)	Musk. X	Description
Culvert	#1	==>	End	0.000	0.000	DS 1 49+15

#1
Culvert

Structure Summary:

	Immediate Contributing Area (ac)	Total Contributing Area (ac)	Peak Discharge (cfs)	Total Runoff Volume (ac-ft)
#1	102.500	102.500	145.09	12.93

Structure Detail:

Structure #1 (Culvert)

DS 1 49+15

Culvert Inputs:

Length (ft)	Slope (%)	Manning's n	Max. Headwater (ft)	Tailwater (ft)	Entrance Loss Coef. (Ke)
55.00	2.50	0.0160	6.00	0.00	0.90

Culvert Results:

Design Discharge = 145.09 cfs

Minimum pipe diameter: 1 - 60 inch pipe(s) required

Subwatershed Hydrology Detail:

Stru #	SWS #	SWS Area (ac)	Time of Conc (hrs)	Musk K (hrs)	Musk X	Curve Number	UHS	Peak Discharge (cfs)	Runoff Volume (ac-ft)
#1	1	7.300	0.084	0.000	0.000	68.000	M	10.21	0.845
	2	95.200	0.121	0.060	0.381	70.000	M	145.83	12.085
	$\sum$	**102.500**						**145.09**	**12.930**

Subwatershed Time of Concentration Details:

Stru #	SWS #	Land Flow Condition	Slope (%)	Vert. Dist. (ft)	Horiz. Dist. (ft)	Velocity (fps)	Time (hrs)
#1	1	3. Short grass pasture	5.00	10.00	200.00	1.780	0.031
		8. Large gullies, diversions, and low flowing streams	3.00	30.00	1,000.00	5.190	0.053
#1	**1**	**Time of Concentration:**					**0.084**
#1	2	1. Forest with heavy ground litter	15.00	30.00	199.99	0.970	0.057
		8. Large gullies, diversions, and low flowing streams	8.08	160.00	1,980.00	8.520	0.064
#1	**2**	**Time of Concentration:**					**0.121**

Subwatershed Muskingum Routing Details:

Stru #	SWS #	Land Flow Condition	Slope (%)	Vert. Dist. (ft)	Horiz. Dist. (ft)	Velocity (fps)	Time (hrs)
#1	2	8. Large gullies, diversions, and low flowing streams	3.33	40.00	1,200.00	5.470	0.060
#1	**2**	**Muskingum K:**					**0.060**

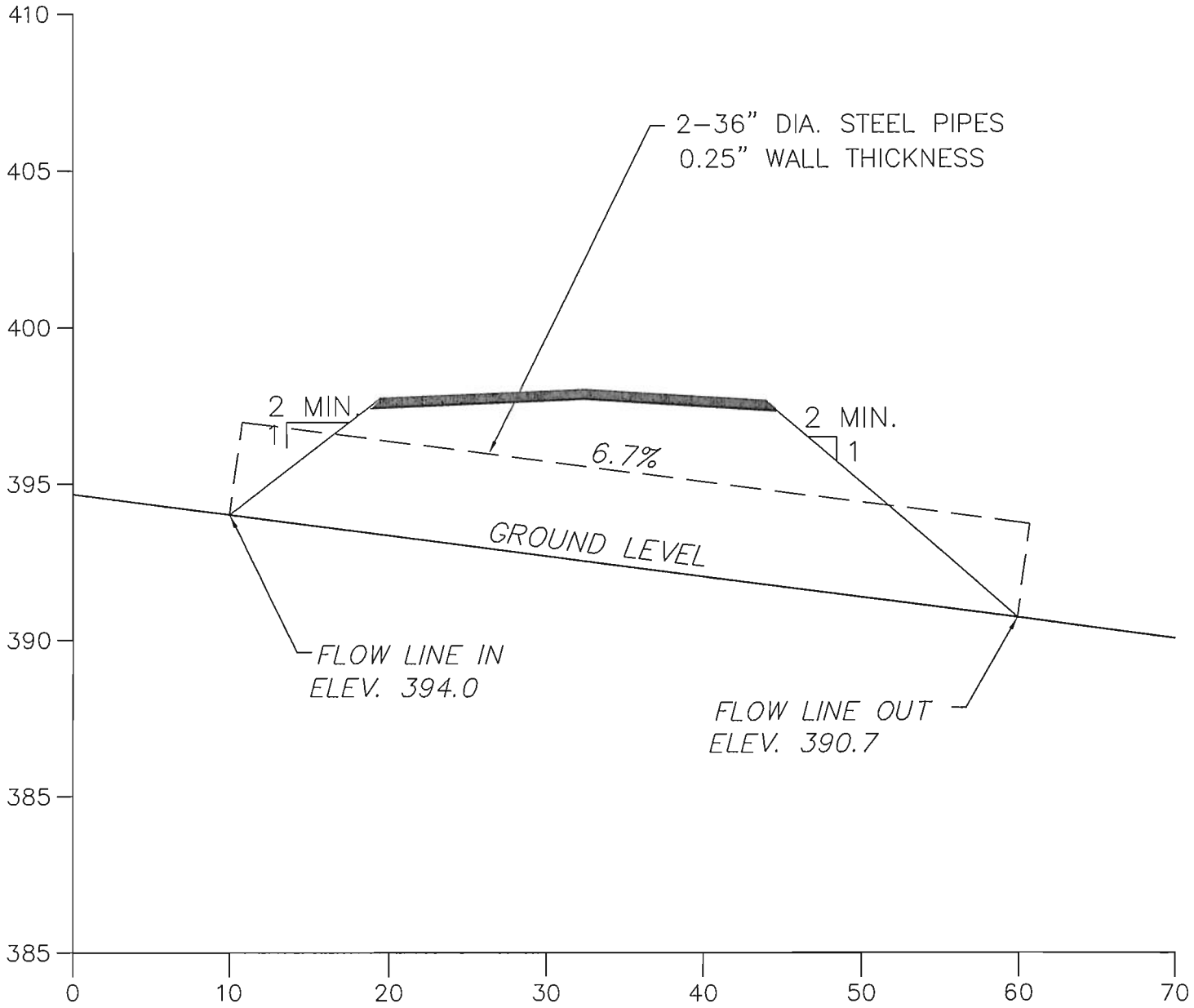

Hydraulics Information

Drainage Area = 24.3 Acres
10 YR.-6 HR., Q = 37.1 C.F.S.
Maximum Water Elev. = 396.9
Minimum Fill Elev. = 398.0
Minimum Freeboard = 1'

PERC ENGINEERING CO., INC.
1606 Highway 78 West Jasper, Alabama 35501
P.O. Box 1712 Jasper, Alabama 35502
(205) 384-5563 Office (205) 384-5491 Fax

NORTH PRATT MINING, LLC
PRATT NO. 1 MINE
P-3972
PRIMARY ROAD 1P CROSS SECTION
DS1 58+30

DRAWN BY: S.D.M. DWG. NAME: NPMNPHR1CS	DATE: 3/5/2013
APPROVED BY: S.D.M.	SCALE: AS NOTED

V:\Steve Miles\Steve Docs\Mines\North Pratt\Hydraulics\NPMNPHR1CS.dwg 03/05/13 16:14

Copyright 1998 -2006 Pamela L Schwab

North Pratt Mining, LLC

Pratt No. 1 Mine

P-3972

DS1 58+30

4.3 Inches, 10 Year - 6 Hour

SCS 6 Hour Event

SDM

PERC Engineering Co., Inc.
1606 Highway 78 West
Jasper, AL 35501

Phone: (205) 384-5553
Email: smiles@percengineering.com

General Information

Storm Information:

Storm Type:	Rainfall Event

Accumulated Time (hrs)	Accumulated Depth (in)
0.00	0.0000
0.50	0.1510
1.00	0.3440
1.50	0.5810
2.00	0.9890
2.50	2.5800
3.00	3.0100
3.50	3.3540
4.00	3.5910
4.50	3.8060
5.00	3.9780
5.50	4.1500
6.00	4.3000

Peak 30-minute Intensity: 3.182 in/hr

Structure Networking:

Type	Stru #	(flows into)	Stru #	Musk. K (hrs)	Musk. X	Description
Culvert	#1	==>	End	0.000	0.000	DS 1 58+30

#1
Culvert

Structure Summary:

	Immediate Contributing Area (ac)	Total Contributing Area (ac)	Peak Discharge (cfs)	Total Runoff Volume (ac-ft)
#1	24.300	24.300	37.05	3.07

Structure Detail:

Structure #1 (Culvert)

DS 1 58+30

Culvert Inputs:

Length (ft)	Slope (%)	Manning's n	Max. Headwater (ft)	Tailwater (ft)	Entrance Loss Coef. (Ke)
50.00	6.70	0.0160	2.90	0.00	0.90

Culvert Results:

Design Discharge = 37.05 cfs

Minimum pipe diameter: 1 - 45 inch pipe(s) required

USE 2 - 36" STEEL PIPES

AREA (45") $= \pi r^2 = \pi(45''/2)^2 = 1590.4\ IN^2$

AREA (2-36") $= 2\pi r^2 = 2\pi(36''/2)^2 = 2035.7\ IN^2$

Subwatershed Hydrology Detail:

Stru #	SWS #	SWS Area (ac)	Time of Conc (hrs)	Musk K (hrs)	Musk X	Curve Number	UHS	Peak Discharge (cfs)	Runoff Volume (ac-ft)
#1	1	1.300	0.026	0.000	0.000	68.000	M	1.82	0.150
	2	23.000	0.102	0.000	0.000	70.000	M	35.23	2.920
	$\sum$	**24.300**						**37.05**	**3.070**

Subwatershed Time of Concentration Details:

Stru #	SWS #	Land Flow Condition	Slope (%)	Vert. Dist. (ft)	Horiz. Dist. (ft)	Velocity (fps)	Time (hrs)
#1	1	3. Short grass pasture	30.00	60.00	200.00	4.380	0.012
		8. Large gullies, diversions, and low flowing streams	5.56	20.00	360.00	7.070	0.014
#1	**1**	**Time of Concentration:**					**0.026**
#1	2	1. Forest with heavy ground litter	10.00	20.00	200.00	0.800	0.069
		8. Large gullies, diversions, and low flowing streams	13.43	180.00	1,340.00	10.990	0.033
#1	**2**	**Time of Concentration:**					**0.102**

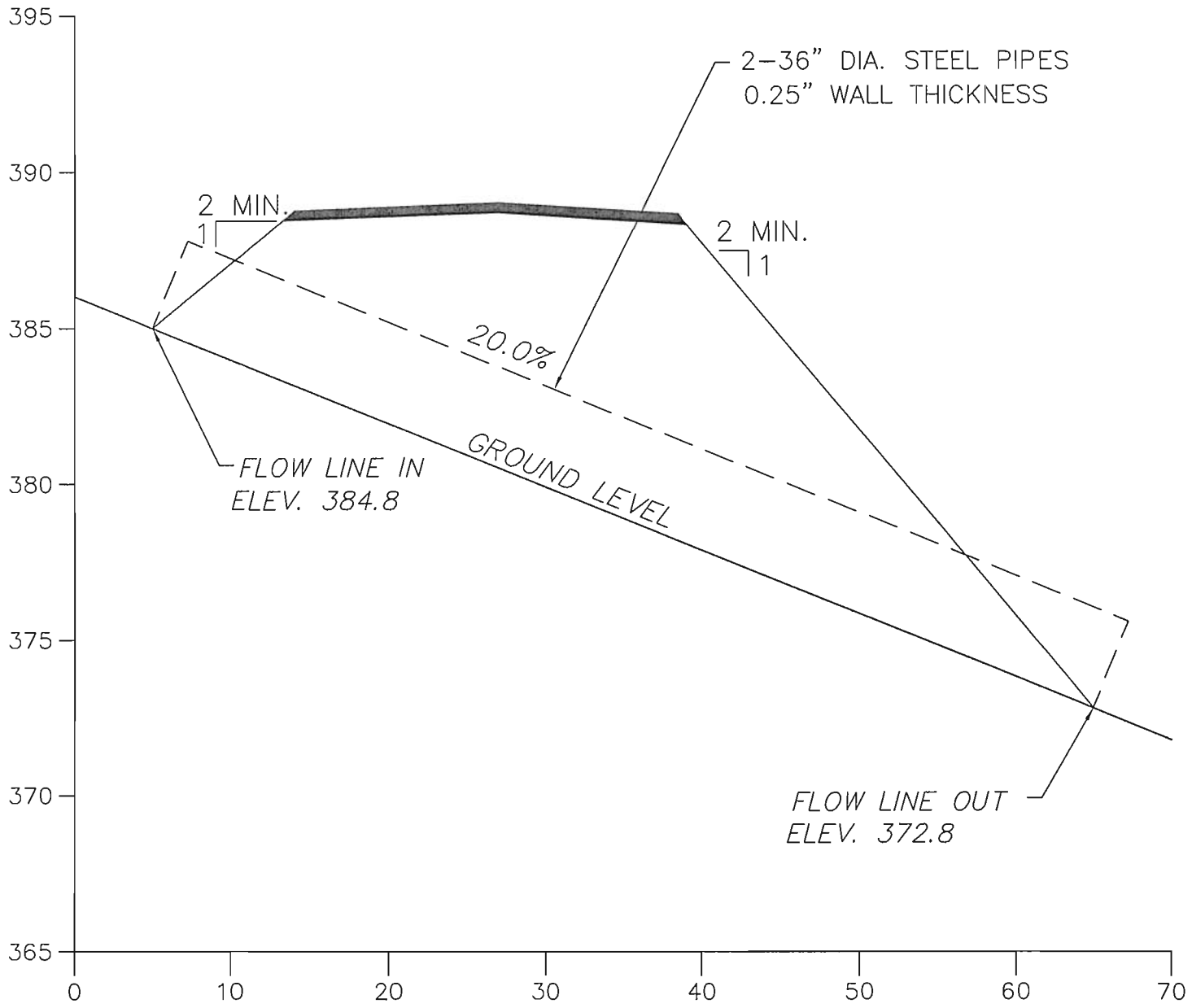

Hydraulics Information

Drainage Area = 27.9 Acres
10 YR.-6 HR., Q = 42.1 C.F.S.
Maximum Water Elev. = 388.0
Minimum Fill Elev. = 389.0
Minimum Freeboard = 1'

PERC ENGINEERING CO., INC.
1606 Highway 78 West Jasper, Alabama 35501
P.O. Box 1712 Jasper, Alabama 35502
(205) 384-5553 Office (205) 384-5481 Fax

NORTH PRATT MINING, LLC
PRATT NO. 1 MINE
P-3972
PRIMARY ROAD 1P CROSS SECTION
DS1 71+89

DRAWN BY: S.D.M. DWG. NAME: NPMNPHR1CS	DATE: 3/5/2013
APPROVED BY: S.D.M.	SCALE: AS NOTED

Y:\Steve Miles\Steve Docs\Mines\North Pratt\Headwaters\NPMNPHR1CS.dwg 03/05/13 16:14

North Pratt Mining, LLC

Pratt No. 1 Mine

P-3972

DS1 71+89

4.3 Inches, 10 Year - 6 Hour

SCS 6 Hour Event

SDM

PERC Engineering Co., Inc.
1606 Highway 78 West
Jasper, AL 35501

Phone: (205) 384-5553
Email: smiles@percengineering.com

General Information

Storm Information:

Storm Type:	Rainfall Event

Accumulated Time (hrs)	Accumulated Depth (in)
0.00	0.0000
0.50	0.1510
1.00	0.3440
1.50	0.5810
2.00	0.9890
2.50	2.5800
3.00	3.0100
3.50	3.3540
4.00	3.5910
4.50	3.8060
5.00	3.9780
5.50	4.1500
6.00	4.3000

Peak 30-minute Intensity: 3.182 in/hr

Structure Networking:

Type	Stru #	(flows into)	Stru #	Musk. K (hrs)	Musk. X	Description
Culvert	#1	==>	End	0.000	0.000	DS 1 71+89

#1
Culvert

Structure Summary:

	Immediate Contributing Area (ac)	Total Contributing Area (ac)	Peak Discharge (cfs)	Total Runoff Volume (ac-ft)
#1	27.900	27.900	42.12	3.49

Structure Detail:

Structure #1 (Culvert)

DS 1 71+89

Culvert Inputs:

Length (ft)	Slope (%)	Manning's n	Max. Headwater (ft)	Tailwater (ft)	Entrance Loss Coef. (Ke)
60.00	20.00	0.0160	3.20	0.00	0.90

Culvert Results:

Design Discharge = 42.12 cfs

Minimum pipe diameter: 1 - 45 inch pipe(s) required

USE 2 - 36" STEEL PIPES

AREA (45") = $\pi r^2 = \pi (45''/2)^2 = 1590.4\ IN^2$

AREA (2-36") = $2\pi r^2 = 2\pi (36''/2)^2 = 2035.8\ IN^2$

Subwatershed Hydrology Detail:

Stru #	SWS #	SWS Area (ac)	Time of Conc (hrs)	Musk K (hrs)	Musk X	Curve Number	UHS	Peak Discharge (cfs)	Runoff Volume (ac-ft)
#1	1	4.600	0.123	0.000	0.000	68.000	M	6.43	0.532
	2	23.300	0.122	0.006	0.437	70.000	M	35.69	2.958
	$\sum$	**27.900**						**42.12**	**3.490**

Subwatershed Time of Concentration Details:

Stru #	SWS #	Land Flow Condition	Slope (%)	Vert. Dist. (ft)	Horiz. Dist. (ft)	Velocity (fps)	Time (hrs)
#1	1	3. Short grass pasture	15.00	30.00	200.00	3.090	0.017
		8. Large gullies, diversions, and low flowing streams	1.45	20.00	1,380.00	3.610	0.106
#1	**1**	**Time of Concentration:**					**0.123**
#1	2	1. Forest with heavy ground litter	5.00	10.00	200.00	0.560	0.099
		8. Large gullies, diversions, and low flowing streams	15.31	150.00	980.00	11.730	0.023
#1	**2**	**Time of Concentration:**					**0.122**

Subwatershed Muskingum Routing Details:

Stru #	SWS #	Land Flow Condition	Slope (%)	Vert. Dist. (ft)	Horiz. Dist. (ft)	Velocity (fps)	Time (hrs)
#1	2	8. Large gullies, diversions, and low flowing streams	15.38	40.00	260.00	11.760	0.006
#1	**2**	**Muskingum K:**					**0.006**

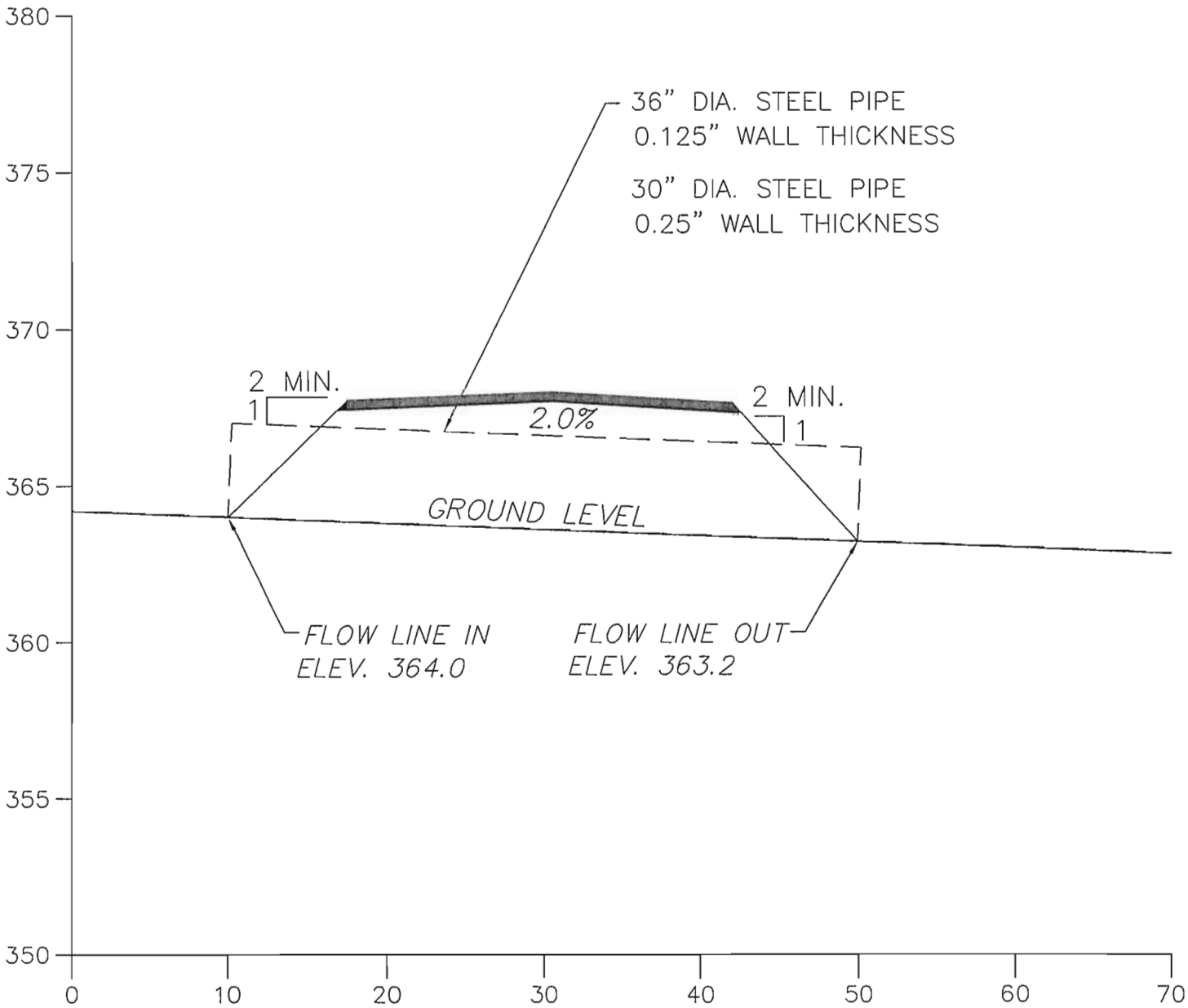

Hydraulics Information

Drainage Area = 13.7 Acres
10 YR.–6 HR., Q = 20.7 C.F.S.
Maximum Water Elev. = 367.0
Minimum Fill Elev. = 368.0
Minimum Freeboard = 1'

PERC ENGINEERING CO., INC.
1608 Highway 78 West Jasper, Alabama 35501
P.O. Box 1712 Jasper, Alabama 35502
(205) 384-5553 Office (205) 384-9491 Fax

NORTH PRATT MINING, LLC
PRATT NO. 1 MINE
P-3972
PRIMARY ROAD 1P CROSS SECTION
DS1 92+86

DRAWN BY: S.D.M. DWG. NAME: NPMNPHR1CS	DATE: 3/5/2013
APPROVED BY: S.D.M.	SCALE: AS NOTED

x:\Steve Miles\Steve Docs\Mines\North Pratt\Vegetess\NPMNPHR1CS.dwg 03/05/13 16:14

Copyright 1998 -2006 Pamela L Schwab

North Pratt Mining, LLC

Pratt No. 1 Mine

P-3972

DS1 92+86

4.3 Inches, 10 Year - 6 Hour

SCS 6 Hour Event

SDM

PERC Engineering Co., Inc.
1606 Highway 78 West
Jasper, AL 35501

Phone: (205) 384-5553
Email: smiles@percengineering.com

General Information

Storm Information:

Storm Type:	Rainfall Event

Accumulated Time (hrs)	Accumulated Depth (in)
0.00	0.0000
0.50	0.1510
1.00	0.3440
1.50	0.5810
2.00	0.9890
2.50	2.5800
3.00	3.0100
3.50	3.3540
4.00	3.5910
4.50	3.8060
5.00	3.9780
5.50	4.1500
6.00	4.3000

Peak 30-minute Intensity: 3.182 in/hr

Structure Networking:

Type	Stru #	(flows into)	Stru #	Musk. K (hrs)	Musk. X	Description
Culvert	#1	==>	End	0.000	0.000	DS 1 92+86

#1
Culvert

Structure Summary:

	Immediate Contributing Area (ac)	Total Contributing Area (ac)	Peak Discharge (cfs)	Total Runoff Volume (ac-ft)
#1	13.700	13.700	20.74	1.72

Structure Detail:

Structure #1 (Culvert)

DS 1 92+86

Culvert Inputs:

Length (ft)	Slope (%)	Manning's n	Max. Headwater (ft)	Tailwater (ft)	Entrance Loss Coef. (Ke)
40.00	2.00	0.0160	3.00	0.00	0.90

Culvert Results:

Design Discharge = 20.74 cfs

Minimum pipe diameter: 1 - 30 inch pipe(s) required

Subwatershed Hydrology Detail:

Stru #	SWS #	SWS Area (ac)	Time of Conc (hrs)	Musk K (hrs)	Musk X	Curve Number	UHS	Peak Discharge (cfs)	Runoff Volume (ac-ft)
#1	1	1.800	0.025	0.000	0.000	68.000	M	2.52	0.208
	2	11.900	0.058	0.002	0.424	70.000	M	18.23	1.511
	$\sum$	**13.700**						**20.74**	**1.719**

Subwatershed Time of Concentration Details:

Stru #	SWS #	Land Flow Condition	Slope (%)	Vert. Dist. (ft)	Horiz. Dist. (ft)	Velocity (fps)	Time (hrs)
#1	1	3. Short grass pasture	15.00	30.00	199.99	3.090	0.017
		8. Large gullies, diversions, and low flowing streams	7.69	20.00	260.00	8.320	0.008
#1	**1**	**Time of Concentration:**					**0.025**
#1	2	1. Forest with heavy ground litter	25.00	50.00	200.00	1.260	0.044
		8. Large gullies, diversions, and low flowing streams	21.43	150.00	700.00	13.880	0.014
#1	**2**	**Time of Concentration:**					**0.058**

Subwatershed Muskingum Routing Details:

Stru #	SWS #	Land Flow Condition	Slope (%)	Vert. Dist. (ft)	Horiz. Dist. (ft)	Velocity (fps)	Time (hrs)
#1	2	8. Large gullies, diversions, and low flowing streams	10.00	10.00	100.00	9.480	0.002
#1	**2**	**Muskingum K:**					**0.002**

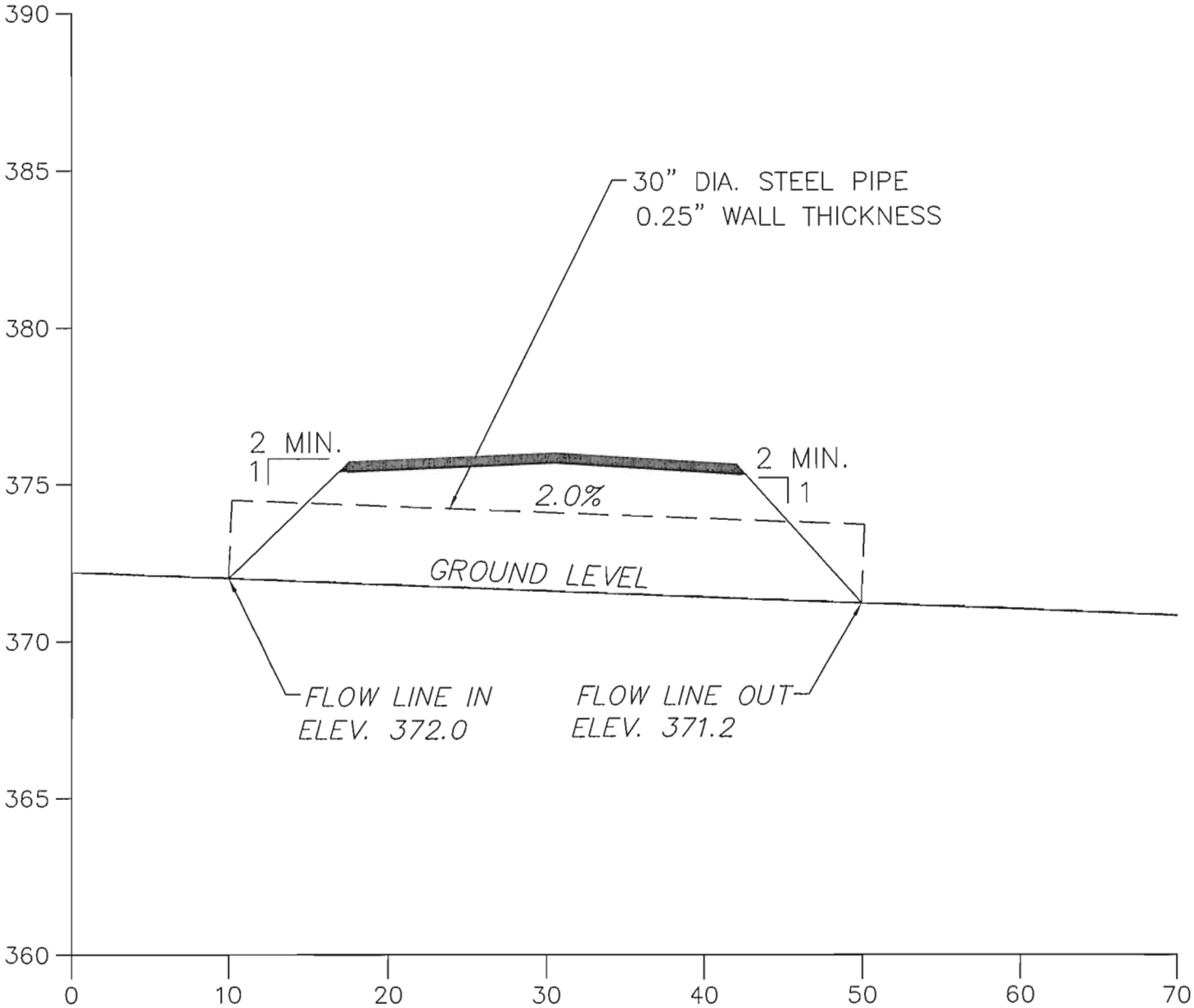

Hydraulics Information

Drainage Area = 9.6 Acres
10 YR.–6 HR., Q = 14.5 C.F.S.
Maximum Water Elev. = 374.3
Minimum Fill Elev. = 376.0
Minimum Freeboard = 1'

PERC ENGINEERING CO., INC.
1606 Highway 78 East Jasper, Alabama 35501
P.O. Box 1712 Jasper, Alabama 35502
(205) 384-5503 Office (205) 384-5491 Fax

NORTH PRATT MINING, LLC
PRATT NO. 1 MINE
P-3972
PRIMARY ROAD 1P CROSS SECTION
DS1 106+21

DRAWN BY: S.D.M. DWG. NAME: NPMNPHR1CS	DATE: 3/5/2013
APPROVED BY: S.D.M.	SCALE: AS NOTED

V:\Steve Files\Steve Docs\Mines\North Pratt\Hydraulics\NPMNPHR1CS.dwg 03/05/13 16:14

Copyright 1998 -2006 Pamela J. Schwab

North Pratt Mining, LLC

Pratt No. 1 Mine

P-3972

DS1 106+21

4.3 Inches, 10 Year - 6 Hour

SCS 6 Hour Event

SDM

PERC Engineering Co., Inc.
1606 Highway 78 West
Jasper, AL 35501

Phone: (205) 384-5553
Email: smiles@percengineering.com

General Information

Storm Information:

Storm Type:	Rainfall Event

Accumulated Time (hrs)	Accumulated Depth (in)
0.00	0.0000
0.50	0.1510
1.00	0.3440
1.50	0.5810
2.00	0.9890
2.50	2.5800
3.00	3.0100
3.50	3.3540
4.00	3.5910
4.50	3.8060
5.00	3.9780
5.50	4.1500
6.00	4.3000

Peak 30-minute Intensity: 3.182 in/hr

Structure Networking:

Type	Stru #	(flows into)	Stru #	Musk. K (hrs)	Musk. X	Description
Culvert	#1	==>	End	0.000	0.000	DS 1 106+21

#1
Culvert

Structure Summary:

	Immediate Contributing Area (ac)	Total Contributing Area (ac)	Peak Discharge (cfs)	Total Runoff Volume (ac-ft)
#1	9.600	9.600	14.52	1.20

Structure Detail:

Structure #1 (Culvert)

DS 1 106+21

Culvert Inputs:

Length (ft)	Slope (%)	Manning's n	Max. Headwater (ft)	Tailwater (ft)	Entrance Loss Coef. (Ke)
40.00	2.00	0.0160	2.30	0.00	0.90

Culvert Results:

Design Discharge = 14.52 cfs

Minimum pipe diameter: 1 - 24 inch pipe(s) required

Subwatershed Hydrology Detail:

Stru #	SWS #	SWS Area (ac)	Time of Conc (hrs)	Musk K (hrs)	Musk X	Curve Number	UHS	Peak Discharge (cfs)	Runoff Volume (ac-ft)
#1	1	1.400	0.067	0.000	0.000	68.000	M	1.96	0.162
	2	8.200	0.061	0.034	0.385	70.000	M	12.56	1.041
	$\sum$	**9.600**						**14.52**	**1.203**

Subwatershed Time of Concentration Details:

Stru #	SWS #	Land Flow Condition	Slope (%)	Vert. Dist. (ft)	Horiz. Dist. (ft)	Velocity (fps)	Time (hrs)
#1	1	3. Short grass pasture	2.50	5.00	200.00	1.260	0.044
		8. Large gullies, diversions, and low flowing streams	4.00	20.00	500.00	6.000	0.023
#1	**1**	**Time of Concentration:**					**0.067**
#1	2	1. Forest with heavy ground litter	15.00	30.00	200.00	0.970	0.057
		8. Large gullies, diversions, and low flowing streams	33.33	90.00	270.00	17.320	0.004
#1	**2**	**Time of Concentration:**					**0.061**

Subwatershed Muskingum Routing Details:

Stru #	SWS #	Land Flow Condition	Slope (%)	Vert. Dist. (ft)	Horiz. Dist. (ft)	Velocity (fps)	Time (hrs)
#1	2	8. Large gullies, diversions, and low flowing streams	3.57	25.00	700.00	5.660	0.034
#1	**2**	**Muskingum K:**					**0.034**

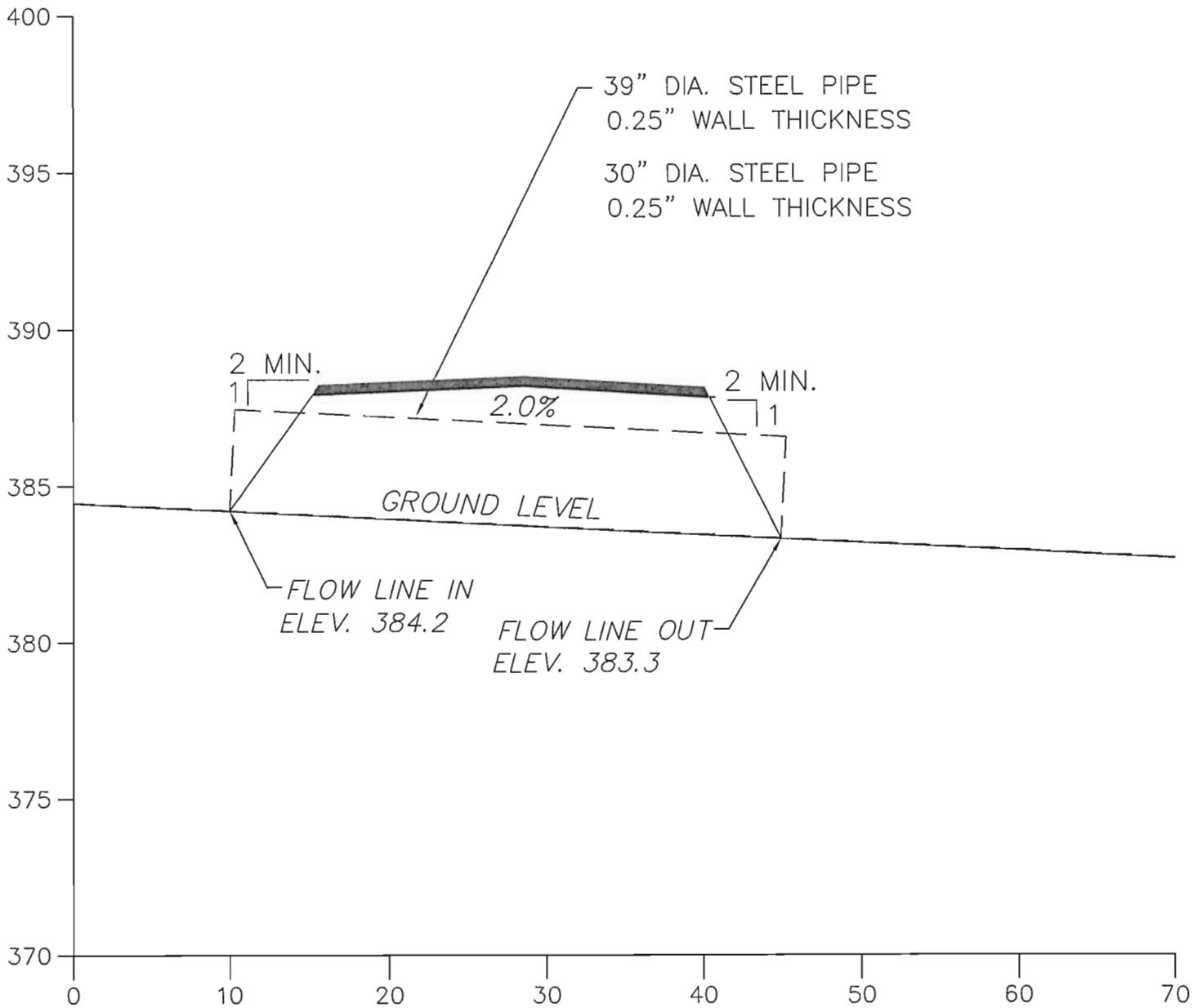

Hydraulics Information

Drainage Area = 7.2 Acres
10 YR.–6 HR., Q = 11.0 C.F.S.
Maximum Water Elev. = 387.5
Minimum Fill Elev. = 388.5
Minimum Freeboard = 1'

PERC ENGINEERING CO., INC.
1606 Highway 78 West Jasper, Alabama 35501
P.O. Box 1712 Jasper, Alabama 35502
(205) 384-5553 Office (205) 384-9491 Fax

NORTH PRATT MINING, LLC
PRATT NO. 1 MINE
P-3972
PRIMARY ROAD 1P CROSS SECTION
DS1 115+16

DRAWN BY: S.D.M. DWG. NAME: NPMNPHR1CS	DATE: 3/5/2013
APPROVED BY: S.D.M.	SCALE: AS NOTED

V:\Steve Mac\Steve Docs\Mines\North Pratt\Hydrologies\Pratt\PHR1CS.dwg 03/05/13 16:14

Copyright 1998 -2006 Pamela L Schwab

North Pratt Mining, LLC

Pratt No. 1 Mine

P-3972

DS1 115+16

4.3 Inches, 10 Year - 6 Hour

SCS 6 Hour Event

SDM

PERC Engineering Co., Inc.
1606 Highway 78 West
Jasper, AL 35501

Phone: (205) 384-5553
Email: smiles@percengineering.com

General Information

Storm Information:

Storm Type:	Rainfall Event

Accumulated Time (hrs)	Accumulated Depth (in)
0.00	0.0000
0.50	0.1510
1.00	0.3440
1.50	0.5810
2.00	0.9890
2.50	2.5800
3.00	3.0100
3.50	3.3540
4.00	3.5910
4.50	3.8060
5.00	3.9780
5.50	4.1500
6.00	4.3000

Peak 30-minute Intensity: 3.182 in/hr

Structure Networking:

Type	Stru #	(flows into)	Stru #	Musk. K (hrs)	Musk. X	Description
Culvert	#1	==>	End	0.000	0.000	DS 1 115+16

#1
Culvert

Structure Summary:

	Immediate Contributing Area (ac)	Total Contributing Area (ac)	Peak Discharge (cfs)	Total Runoff Volume (ac-ft)
#1	7.200	7.200	10.99	0.91

Structure Detail:

Structure #1 (Culvert)

DS 1 115+16

Culvert Inputs:

Length (ft)	Slope (%)	Manning's n	Max. Headwater (ft)	Tailwater (ft)	Entrance Loss Coef. (Ke)
45.00	2.00	0.0160	2.00	0.00	0.90

Culvert Results:

Design Discharge = 10.99 cfs

Minimum pipe diameter: 1 - 24 inch pipe(s) required

Subwatershed Hydrology Detail:

Stru #	SWS #	SWS Area (ac)	Time of Conc (hrs)	Musk K (hrs)	Musk X	Curve Number	UHS	Peak Discharge (cfs)	Runoff Volume (ac-ft)
#1	1	0.300	0.025	0.006	0.385	68.000	M	0.42	0.035
	2	6.900	0.066	0.000	0.000	70.000	M	10.57	0.876
	$\sum$	**7.200**						**10.99**	**0.911**

Subwatershed Time of Concentration Details:

Stru #	SWS #	Land Flow Condition	Slope (%)	Vert. Dist. (ft)	Horiz. Dist. (ft)	Velocity (fps)	Time (hrs)
#1	1	3. Short grass pasture	3.57	5.00	140.00	1.510	0.025
#1	**1**	**Time of Concentration:**					**0.025**
#1	2	1. Forest with heavy ground litter	15.00	30.00	199.99	0.970	0.057
		8. Large gullies, diversions, and low flowing streams	27.27	150.00	550.00	15.660	0.009
#1	**2**	**Time of Concentration:**					**0.066**

Subwatershed Muskingum Routing Details:

Stru #	SWS #	Land Flow Condition	Slope (%)	Vert. Dist. (ft)	Horiz. Dist. (ft)	Velocity (fps)	Time (hrs)
#1	1	8. Large gullies, diversions, and low flowing streams	3.57	5.00	140.00	5.660	0.006
#1	**1**	**Muskingum K:**					**0.006**

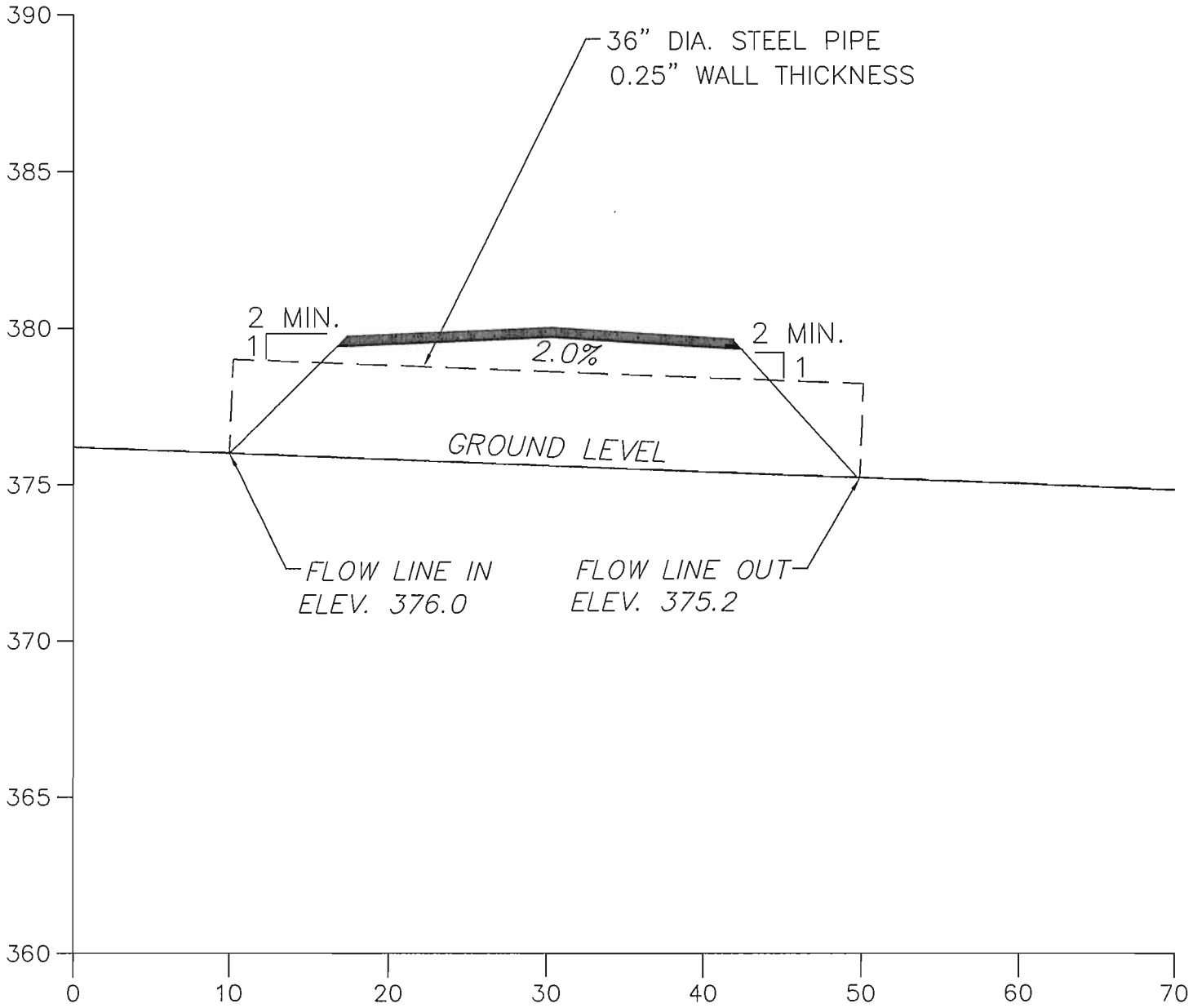

Hydraulics Information

Drainage Area = 12.4 Acres
10 YR.–6 HR., Q = 18.8 C.F.S.
Maximum Water Elev. = 379.0
Minimum Fill Elev. = 380.0
Minimum Freeboard = 1'

PERC ENGINEERING CO., INC.
1608 Highway 78 West Jasper, Alabama 35501
P.O. Box 1712 Jasper, Alabama 35502
(205) 384-5553 Office (205) 384-5181 Fax

NORTH PRATT MINING, LLC
PRATT NO. 1 MINE
P-3972
PRIMARY ROAD 1P CROSS SECTION
DS1 120+57

DRAWN BY: S.D.M. DWG. NAME: NPMNPHR1CS	DATE: 3/5/2013
APPROVED BY: S.D.M.	SCALE: AS NOTED

V:\Steve Miles\Steve Docs\Mines\North Pratt\Industries\NPMNPHR1CS.dwg 03/05/13 16:14

Copyright 1998 -2006 Pamela J. Schwab

North Pratt Mining, LLC

Pratt No. 1 Mine

P-3972

DS1 120+57

4.3 Inches, 10 Year - 6 Hour

SCS 6 Hour Event

SDM

PERC Engineering Co., Inc.
1606 Highway 78 West
Jasper, AL 35501

Phone: (205) 384-5553
Email: smiles@percengineering.com

General Information

Storm Information:

Storm Type:	Rainfall Event

Accumulated Time (hrs)	Accumulated Depth (in)
0.00	0.0000
0.50	0.1510
1.00	0.3440
1.50	0.5810
2.00	0.9890
2.50	2.5800
3.00	3.0100
3.50	3.3540
4.00	3.5910
4.50	3.8060
5.00	3.9780
5.50	4.1500
6.00	4.3000

Peak 30-minute Intensity: 3.182 in/hr

Structure Networking:

Type	Stru #	(flows into)	Stru #	Musk. K (hrs)	Musk. X	Description
Culvert	#1	==>	End	0.000	0.000	DS 1 120+57

#1
Culvert

Structure Summary:

	Immediate Contributing Area (ac)	Total Contributing Area (ac)	Peak Discharge (cfs)	Total Runoff Volume (ac-ft)
#1	12.400	12.400	18.83	1.56

Structure Detail:

Structure #1 (Culvert)

DS 1 120+57

Culvert Inputs:

Length (ft)	Slope (%)	Manning's n	Max. Headwater (ft)	Tailwater (ft)	Entrance Loss Coef. (Ke)
40.00	2.00	0.0160	2.70	0.00	0.90

Culvert Results:

Design Discharge = 18.83 cfs

Minimum pipe diameter: 1 - 30 inch pipe(s) required

Subwatershed Hydrology Detail:

Stru #	SWS #	SWS Area (ac)	Time of Conc (hrs)	Musk K (hrs)	Musk X	Curve Number	UHS	Peak Discharge (cfs)	Runoff Volume (ac-ft)
#1	1	1.200	0.065	0.000	0.000	68.000	M	1.68	0.139
	2	11.200	0.067	0.004	0.395	70.000	M	17.16	1.422
	$\sum$	**12.400**						**18.83**	**1.561**

Subwatershed Time of Concentration Details:

Stru #	SWS #	Land Flow Condition	Slope (%)	Vert. Dist. (ft)	Horiz. Dist. (ft)	Velocity (fps)	Time (hrs)
#1	1	3. Short grass pasture	1.92	5.00	260.00	1.100	0.065
#1	**1**	**Time of Concentration:**					**0.065**
#1	2	1. Forest with heavy ground litter	20.00	40.00	200.00	1.130	0.049
		8. Large gullies, diversions, and low flowing streams	17.65	150.00	850.00	12.600	0.018
#1	**2**	**Time of Concentration:**					**0.067**

Subwatershed Muskingum Routing Details:

Stru #	SWS #	Land Flow Condition	Slope (%)	Vert. Dist. (ft)	Horiz. Dist. (ft)	Velocity (fps)	Time (hrs)
#1	2	8. Large gullies, diversions, and low flowing streams	4.55	5.00	110.00	6.390	0.004
#1	**2**	**Muskingum K:**					**0.004**

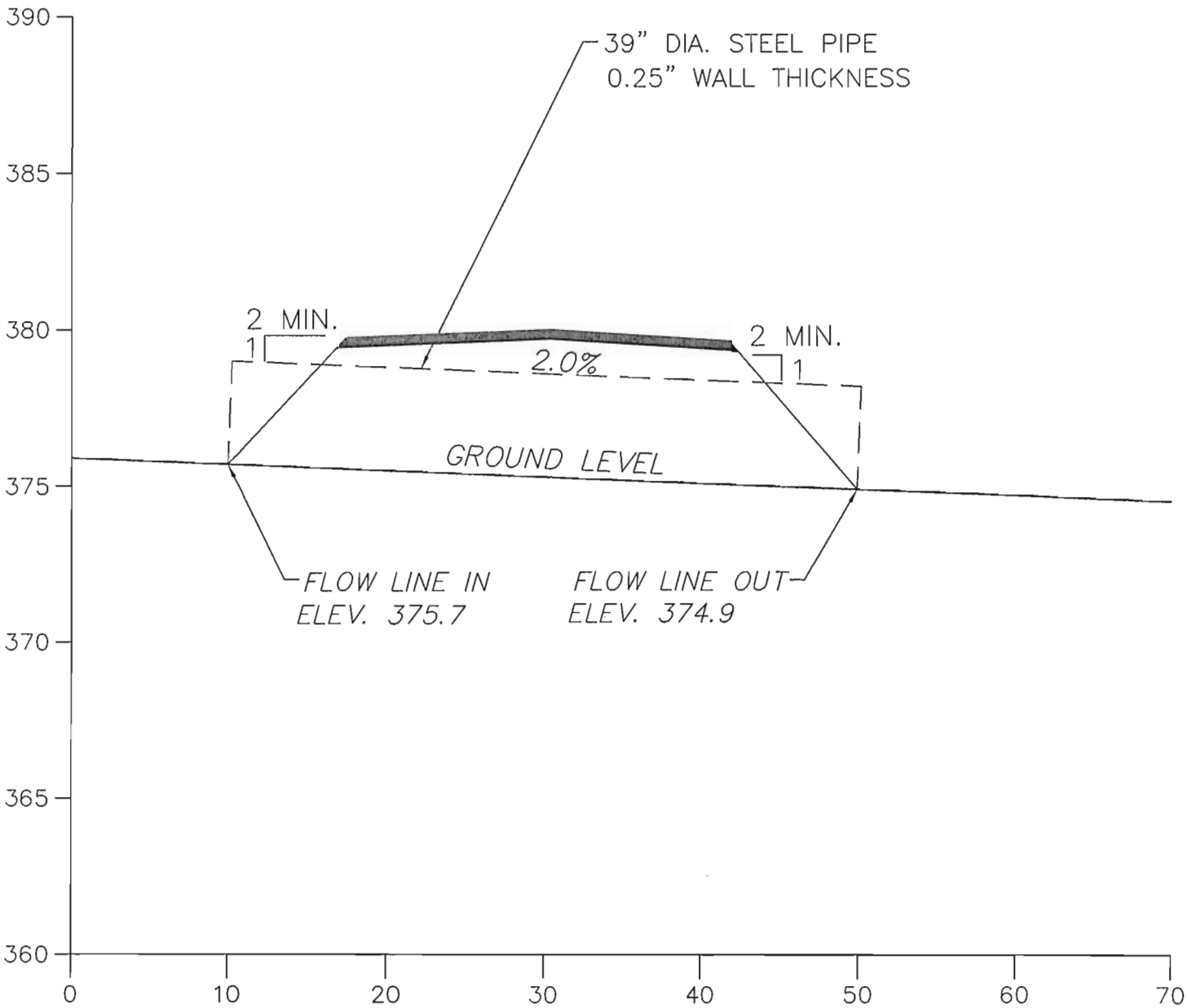

Hydraulics Information

Drainage Area = 23.6 Acres
10 YR.–6 HR., Q = 22.0 C.F.S.
Maximum Water Elev. = 379.0
Minimum Fill Elev. = 380.0
Minimum Freeboard = 1'

PERC ENGINEERING CO., INC.
1606 Highway 78 West Jasper, Alabama 35501
P.O. Box 1712 Jasper, Alabama 35502
(205) 384-5362 Office (205) 384-9491 Fax

NORTH PRATT MINING, LLC
PRATT NO. 1 MINE
P-3972
PRIMARY ROAD 1P CROSS SECTION
DS1 123+40

DRAWN BY: S.D.M. DWG. NAME: NPMNPHR1CS	DATE: 3/5/2013
APPROVED BY: S.D.M.	SCALE: AS NOTED

V:\Steve Miles\Steve Disc\Mines\Vicin Pratt\Headrooms\NPMNPHR1CS.dwg 03/05/13 16:14

Copyright 1998 -2006 Pamela L Schwab

North Pratt Mining, LLC
Pratt No. 1 Mine
P-3972
DS1 123+40

4.3 Inches, 10 Year - 6 Hour

SCS 6 Hour Event

SDM

PERC Engineering Co., Inc.
1606 Highway 78 West
Jasper, AL 35501

Phone: (205) 384-5553
Email: smiles@percengineering.com

General Information

Storm Information:

Storm Type:	Rainfall Event

Accumulated Time (hrs)	Accumulated Depth (in)
0.00	0.0000
0.50	0.1510
1.00	0.3440
1.50	0.5810
2.00	0.9890
2.50	2.5800
3.00	3.0100
3.50	3.3540
4.00	3.5910
4.50	3.8060
5.00	3.9780
5.50	4.1500
6.00	4.3000

Peak 30-minute Intensity: 3.182 in/hr

Structure Networking:

Type	Stru #	(flows into)	Stru #	Musk. K (hrs)	Musk. X	Description
Culvert	#1	==>	End	0.000	0.000	DS 1 123+40

#1
Culvert

Structure Summary:

	Immediate Contributing Area (ac)	Total Contributing Area (ac)	Peak Discharge (cfs)	Total Runoff Volume (ac-ft)
#1	23.600	23.600	22.01	2.46

Structure Detail:

Structure #1 (Culvert)

DS 1 123+40

Culvert Inputs:

Length (ft)	Slope (%)	Manning's n	Max. Headwater (ft)	Tailwater (ft)	Entrance Loss Coef. (Ke)
40.00	2.00	0.0160	2.90	0.00	0.90

Culvert Results:

Design Discharge = 22.01 cfs

Minimum pipe diameter: 1 - 30 inch pipe(s) required

Subwatershed Hydrology Detail:

Stru #	SWS #	SWS Area (ac)	Time of Conc (hrs)	Musk K (hrs)	Musk X	Curve Number	UHS	Peak Discharge (cfs)	Runoff Volume (ac-ft)
#1	1	1.000	0.059	0.000	0.000	68.000	M	1.40	0.116
	2	22.600	0.131	0.008	0.379	70.000	M	21.61	2.347
	$\sum$	**23.600**						**22.01**	**2.463**

Subwatershed Time of Concentration Details:

Stru #	SWS #	Land Flow Condition	Slope (%)	Vert. Dist. (ft)	Horiz. Dist. (ft)	Velocity (fps)	Time (hrs)
#1	1	3. Short grass pasture	2.50	5.00	200.00	1.260	0.044
		8. Large gullies, diversions, and low flowing streams	2.08	5.00	240.00	4.330	0.015
#1	**1**	**Time of Concentration:**					**0.059**
#1	2	1. Forest with heavy ground litter	5.00	10.00	200.00	0.560	0.099
		8. Large gullies, diversions, and low flowing streams	14.39	190.00	1,320.00	11.380	0.032
#1	**2**	**Time of Concentration:**					**0.131**

Subwatershed Muskingum Routing Details:

Stru #	SWS #	Land Flow Condition	Slope (%)	Vert. Dist. (ft)	Horiz. Dist. (ft)	Velocity (fps)	Time (hrs)
#1	2	8. Large gullies, diversions, and low flowing streams	3.13	5.00	160.00	5.300	0.008
#1	**2**	**Muskingum K:**					**0.008**

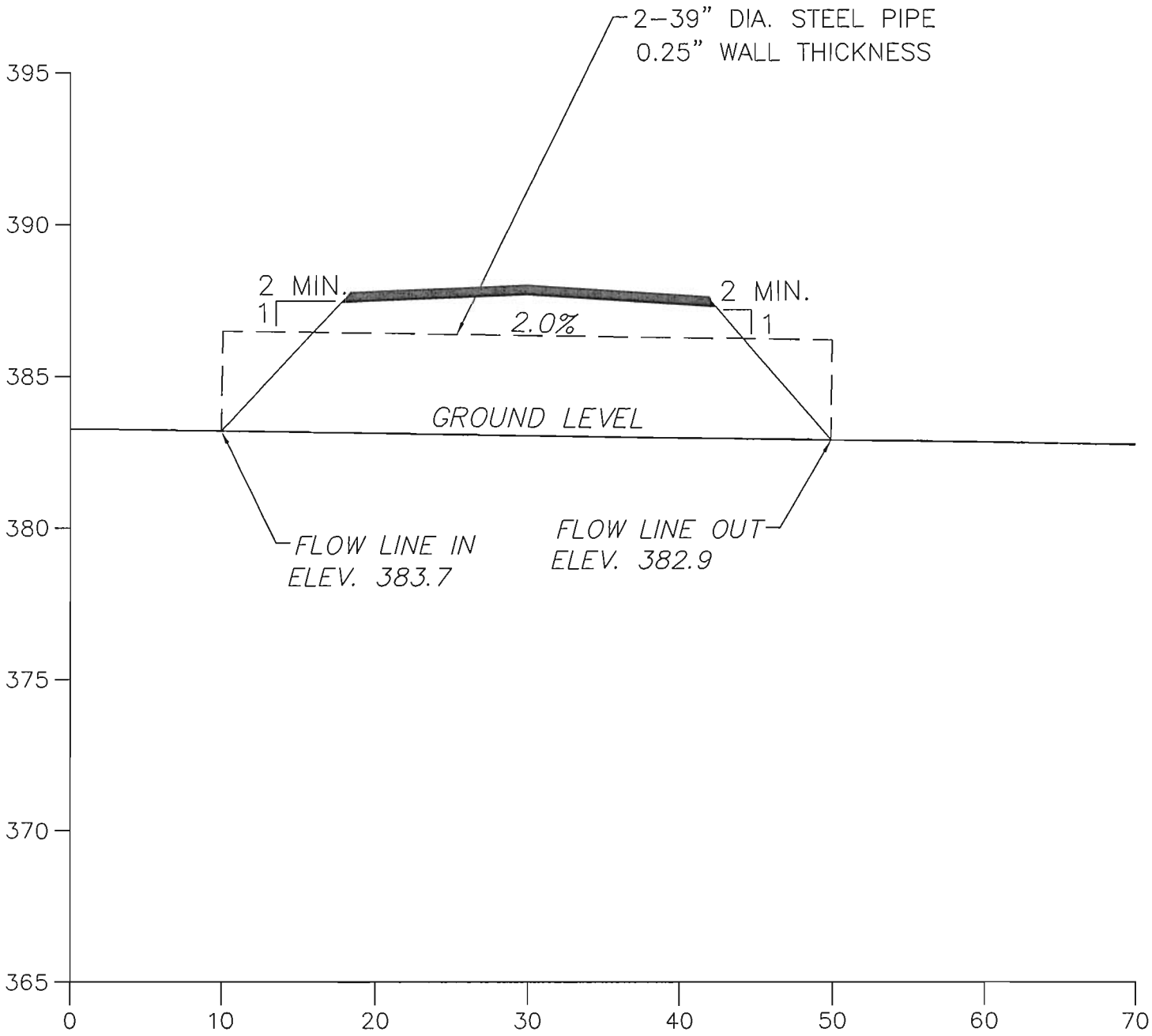

Hydraulics Information

Drainage Area = 22.2 Acres
10 YR.-6 HR., Q = 33.9 C.F.S.
Maximum Water Elev. = 387.0
Minimum Fill Elev. = 388.0
Minimum Freeboard = 1'

PERC ENGINEERING CO., INC.
1606 Highway 78 West Jasper, Alabama 35501
P.O. Box 1712 Jasper, Alabama 35502
(205) 384-3553 Office (205) 384-9191 Fax

NORTH PRATT MINING, LLC
PRATT NO. 1 MINE
P-3972
PRIMARY ROAD 1P CROSS SECTION
DS1 130+85

DRAWN BY: S.D.M. DWG. NAME: NPMNPHR1CS	DATE: 3/5/2013
APPROVED BY: S.D.M.	SCALE: AS NOTED

V:\Steve Mics\Steve Docs\Mines\North Pratt\Houlroads\NPMNPHR1CS.dwg 03/06/13 16:14

Copyright 1998 -2006 Pamela J. Schwab

North Pratt Mining, LLC

Pratt No. 1 Mine

P-3972

DS1 130+85

4.3 Inches, 10 Year - 6 Hour

SCS 6 Hour Event

SDM

PERC Engineering Co., Inc.
1606 Highway 78 West
Jasper, AL 35501

Phone: (205) 384-5553
Email: smiles@percengineering.com

General Information

Storm Information:

Storm Type:	Rainfall Event

Accumulated Time (hrs)	Accumulated Depth (in)
0.00	0.0000
0.50	0.1510
1.00	0.3440
1.50	0.5810
2.00	0.9890
2.50	2.5800
3.00	3.0100
3.50	3.3540
4.00	3.5910
4.50	3.8060
5.00	3.9780
5.50	4.1500
6.00	4.3000

Peak 30-minute Intensity: 3.182 in/hr

Structure Networking:

Type	Stru #	(flows into)	Stru #	Musk. K (hrs)	Musk. X	Description
Culvert	#1	==>	End	0.000	0.000	DS 1 130+85

#1
Culvert

Structure Summary:

	Immediate Contributing Area (ac)	Total Contributing Area (ac)	Peak Discharge (cfs)	Total Runoff Volume (ac-ft)
#1	22.200	22.200	33.85	2.80

Structure Detail:

Structure #1 (Culvert)

DS 1 130+85

Culvert Inputs:

Length (ft)	Slope (%)	Manning's n	Max. Headwater (ft)	Tailwater (ft)	Entrance Loss Coef. (Ke)
40.00	2.00	0.0160	3.30	0.00	0.90

Culvert Results:

Design Discharge = 33.85 cfs

Minimum pipe diameter: 1 - 36 inch pipe(s) required

Subwatershed Hydrology Detail:

Stru #	SWS #	SWS Area (ac)	Time of Conc (hrs)	Musk K (hrs)	Musk X	Curve Number	UHS	Peak Discharge (cfs)	Runoff Volume (ac-ft)
#1	1	1.200	0.020	0.000	0.000	68.000	M	1.68	0.139
	2	21.000	0.084	0.005	0.410	70.000	M	32.17	2.666
	$\sum$	**22.200**						**33.85**	**2.805**

Subwatershed Time of Concentration Details:

Stru #	SWS #	Land Flow Condition	Slope (%)	Vert. Dist. (ft)	Horiz. Dist. (ft)	Velocity (fps)	Time (hrs)
#1	1	3. Short grass pasture	20.00	40.00	200.00	3.570	0.015
		8. Large gullies, diversions, and low flowing streams	6.67	10.00	150.00	7.740	0.005
#1	**1**	**Time of Concentration:**					**0.020**
#1	2	1. Forest with heavy ground litter	20.00	40.00	200.00	1.130	0.049
		8. Large gullies, diversions, and low flowing streams	12.12	160.00	1,320.00	10.440	0.035
#1	**2**	**Time of Concentration:**					**0.084**

Subwatershed Muskingum Routing Details:

Stru #	SWS #	Land Flow Condition	Slope (%)	Vert. Dist. (ft)	Horiz. Dist. (ft)	Velocity (fps)	Time (hrs)
#1	2	8. Large gullies, diversions, and low flowing streams	6.67	10.00	150.00	7.740	0.005
#1	**2**	**Muskingum K:**					**0.005**

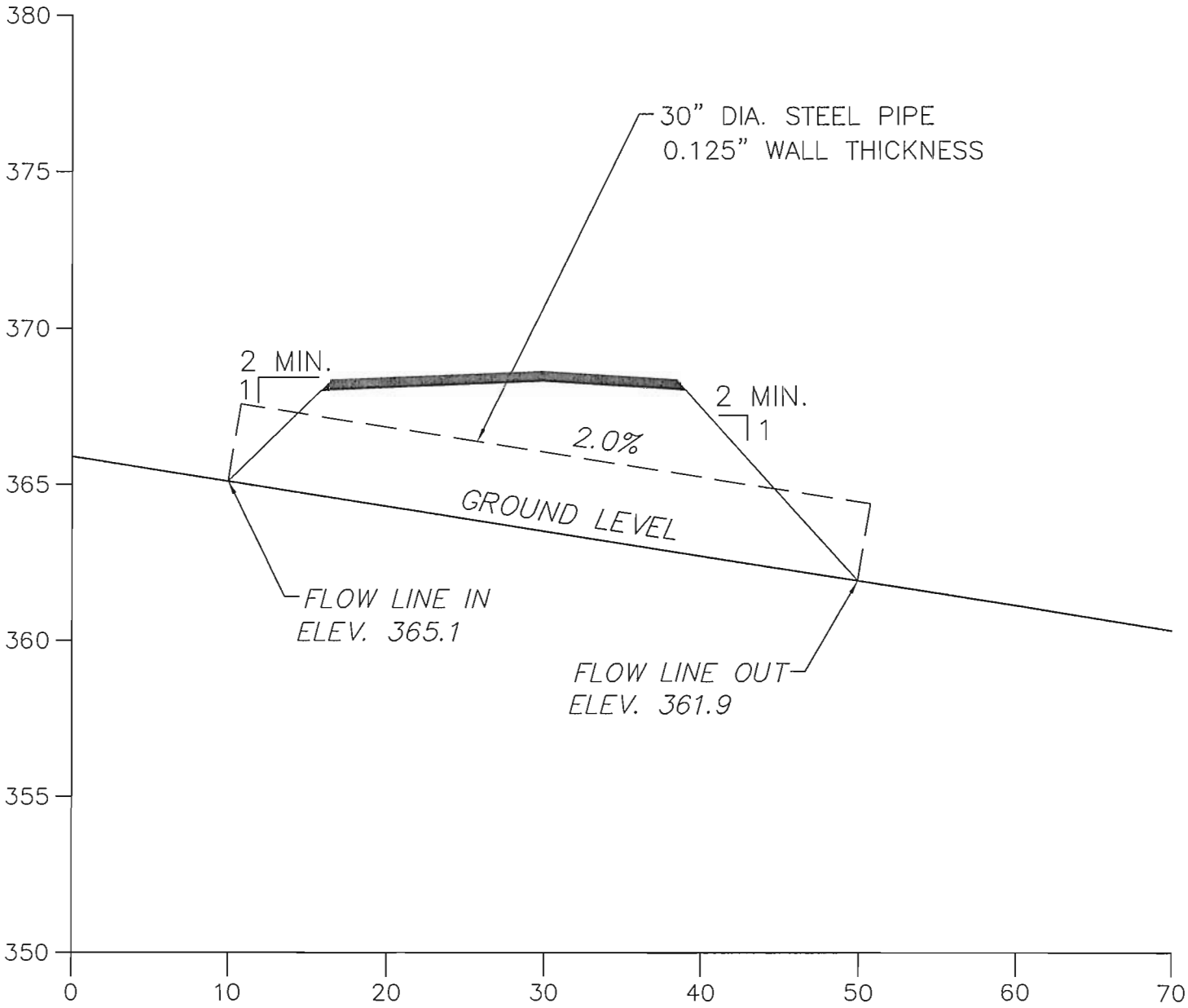

Hydraulics Information

Drainage Area = 5.5 Acres
10 YR.–6 HR., Q = 8.2 C.F.S.
Maximum Water Elev. = 367.6
Minimum Fill Elev. = 368.6
Minimum Freeboard = 1'

PERC ENGINEERING CO., INC.
1606 Highway 78 West Jasper, Alabama 35501
P.O. Box 1712 Jasper, Alabama 35502
(205) 384-5363 Office (205) 384-5431 Fax

NORTH PRATT MINING, LLC
PRATT NO. 1 MINE
P-3972
PRIMARY ROAD 1P CROSS SECTION
DS1 139+02

DRAWN BY: S.D.M. DWG. NAME: NPMNPHR1CS	DATE: 3/5/2013
APPROVED BY: S.D.M.	SCALE: AS NOTED

Y:\Steve Mines\Steve Docs\Mines\North Pratt\Visualrocs\NPMNPHR1CS.dwg 03/05/13 16:14

Copyright 1998 -2006 Pamela J. Schwab

North Pratt Mining, LLC

Pratt No. 1 Mine

P-3972

DS1 139+02

4.3 Inches, 10 Year - 6 Hour

SCS 6 Hour Event

SDM

PERC Engineering Co., Inc.
1606 Highway 78 West
Jasper, AL 35501

Phone: (205) 384-5553
Email: smiles@percengineering.com

General Information

Storm Information:

Storm Type:	Rainfall Event

Accumulated Time (hrs)	Accumulated Depth (in)
0.00	0.0000
0.50	0.1510
1.00	0.3440
1.50	0.5810
2.00	0.9890
2.50	2.5800
3.00	3.0100
3.50	3.3540
4.00	3.5910
4.50	3.8060
5.00	3.9780
5.50	4.1500
6.00	4.3000

Peak 30-minute Intensity: 3.182 in/hr

Structure Networking:

Type	Stru #	(flows into)	Stru #	Musk. K (hrs)	Musk. X	Description
Culvert	#1	==>	End	0.000	0.000	DS 1 139+02

#1
Culvert

Structure Summary:

	Immediate Contributing Area (ac)	Total Contributing Area (ac)	Peak Discharge (cfs)	Total Runoff Volume (ac-ft)
#1	5.500	5.500	8.22	0.68

Structure Detail:

Structure #1 (Culvert)

DS 1 139+02

Culvert Inputs:

Length (ft)	Slope (%)	Manning's n	Max. Headwater (ft)	Tailwater (ft)	Entrance Loss Coef. (Ke)
40.00	8.00	0.0160	1.80	0.00	0.90

Culvert Results:

Design Discharge = 8.22 cfs

Minimum pipe diameter: 1 - 21 inch pipe(s) required

Subwatershed Hydrology Detail:

Stru #	SWS #	SWS Area (ac)	Time of Conc (hrs)	Musk K (hrs)	Musk X	Curve Number	UHS	Peak Discharge (cfs)	Runoff Volume (ac-ft)
#1	1	1.500	0.077	0.000	0.000	68.000	M	2.10	0.174
	2	4.000	0.079	0.024	0.388	70.000	M	6.13	0.508
	$\sum$	**5.500**						**8.22**	**0.681**

Subwatershed Time of Concentration Details:

Stru #	SWS #	Land Flow Condition	Slope (%)	Vert. Dist. (ft)	Horiz. Dist. (ft)	Velocity (fps)	Time (hrs)
#1	1	3. Short grass pasture	2.50	5.00	200.00	1.260	0.044
		8. Large gullies, diversions, and low flowing streams	1.25	5.00	400.00	3.350	0.033
#1	**1**	**Time of Concentration:**					**0.077**
#1	2	1. Forest with heavy ground litter	10.00	20.00	200.00	0.800	0.069
		8. Large gullies, diversions, and low flowing streams	22.22	120.00	540.00	14.140	0.010
#1	**2**	**Time of Concentration:**					**0.079**

Subwatershed Muskingum Routing Details:

Stru #	SWS #	Land Flow Condition	Slope (%)	Vert. Dist. (ft)	Horiz. Dist. (ft)	Velocity (fps)	Time (hrs)
#1	2	8. Large gullies, diversions, and low flowing streams	3.85	20.00	520.00	5.880	0.024
#1	**2**	**Muskingum K:**					**0.024**

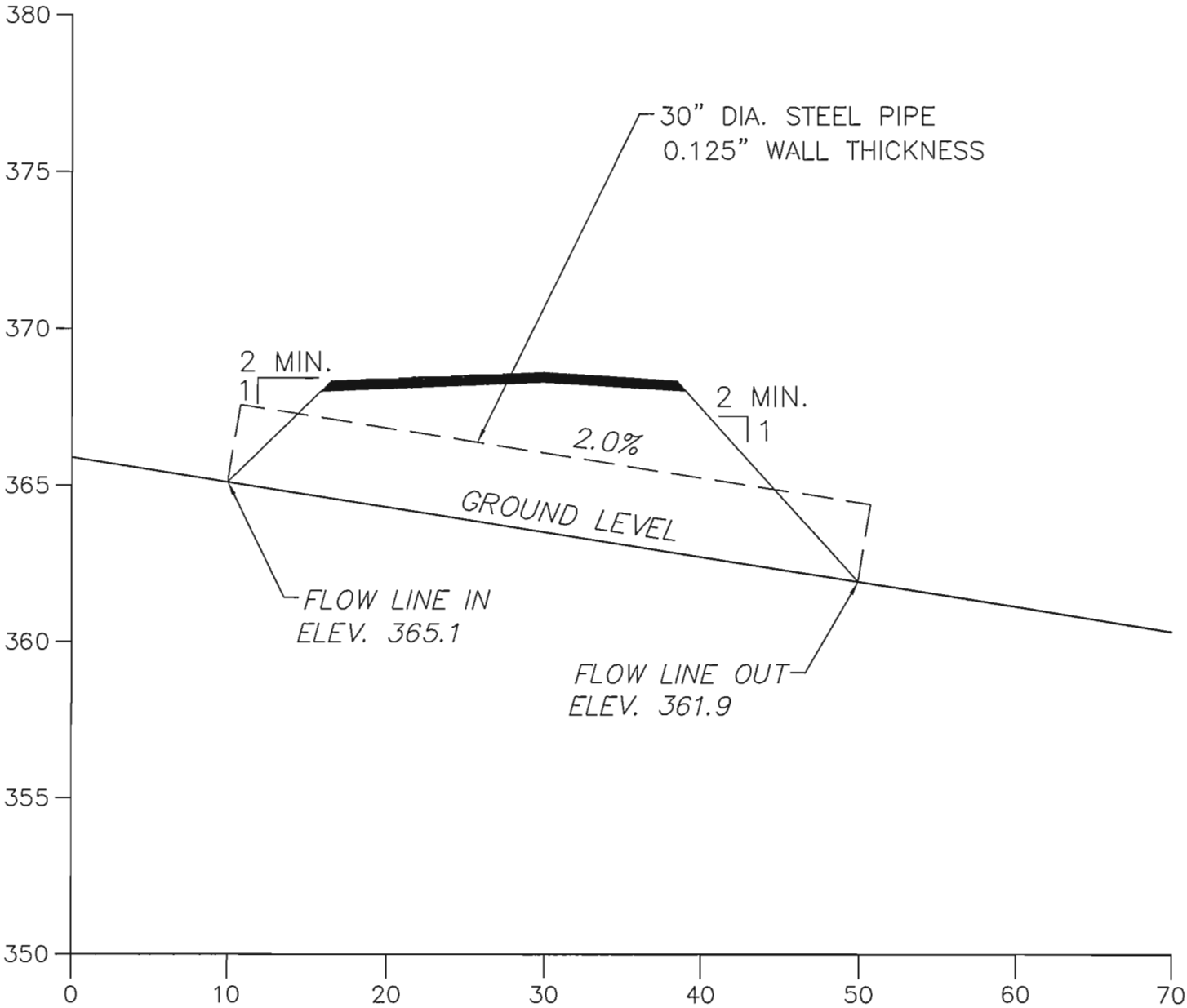

Hydraulics Information

Drainage Area = 5.5 Acres
10 YR.–6 HR., Q = 8.2 C.F.S.
Maximum Water Elev. = 367.6
Minimum Fill Elev. = 368.6
Minimum Freeboard = 1'

PERC ENGINEERING CO., INC.
1606 Highway 78 West Jasper, Alabama 35501
P.O. Box 1712 Jasper, Alabama 35502
(205) 384-5353 Office (205) 384-9491 Fax

NORTH PRATT MINING, LLC
PRATT NO. 1 MINE
P-3973
PRIMARY ROAD 1P CROSS SECTION
DS1 139+02

DRAWN BY: S.D.M. DWG. NAME: NPMNPHR1CS	DATE: 3/5/2013
APPROVED BY: S.D.M.	SCALE: AS NOTED

V:\Steve Miles\Steve Docs\Mines\North Pratt\Hydrocad\NPMNPHR1CS.dwg 03/05/13 16:14

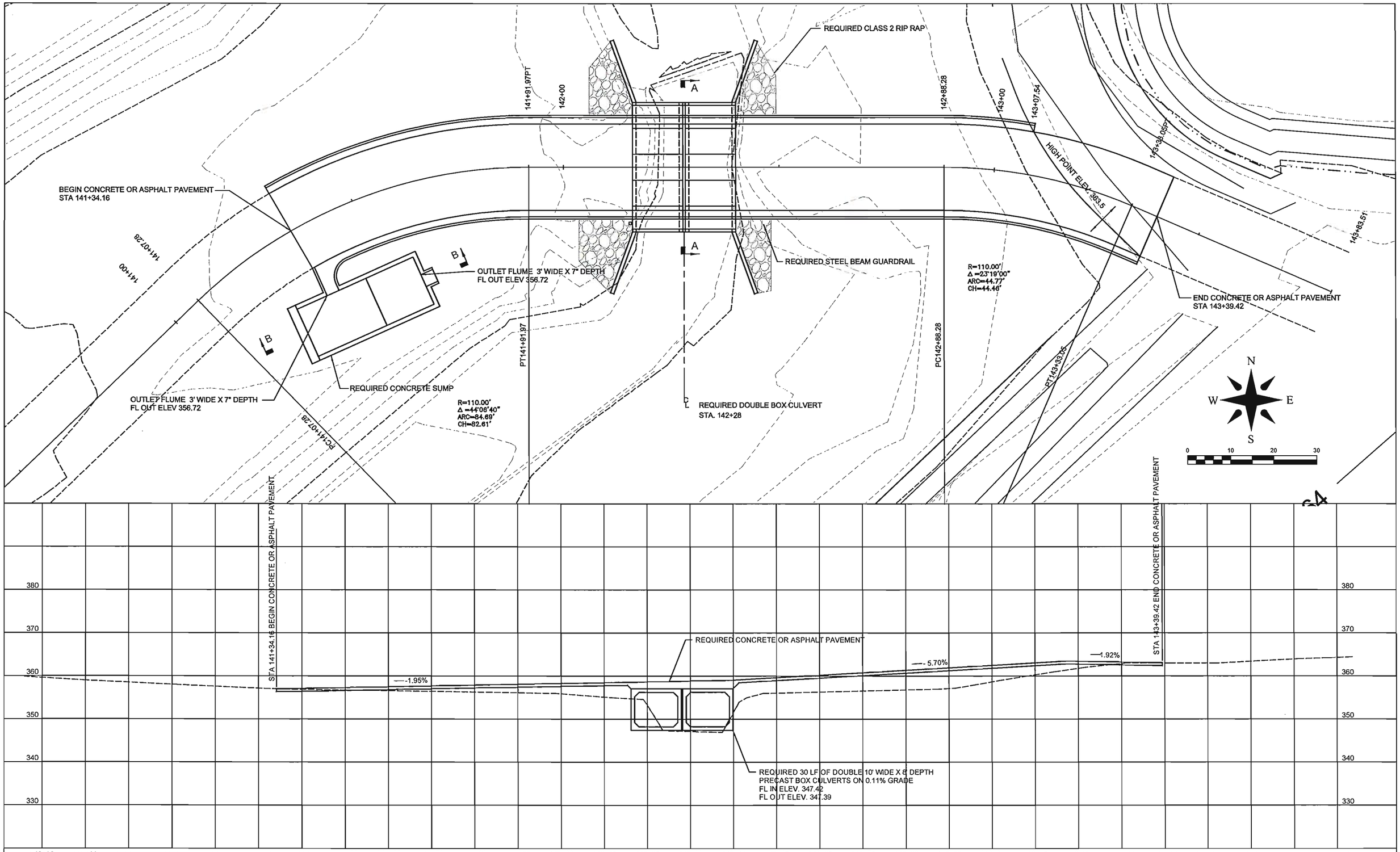

NO.	REVISIONS	BY	DATE	DES	DATE	SCALE
				DRN		
				CHK		
				APPD L.G.S.	3/4/2013	H: 1"=5' V: 1"=5'

ATTACHMENT III-B-5
NORTH PRATT MINING, LLC
PRATT NO. 1 MINE P-3927
PRIMARY ROAD 1P STA 141+34.16 TO 143+39.42

PERC ENGINEERING CO. INC.
1504 Highway 78 West Jasper, Alabama 35501
P.O. Box 1712 Jasper, Alabama 35502
(205) 384-3653 Office (205) 384-3661 Fax

SHEET 1 OF 2

V:\Johnny R\Carlson Projects\PRATT\WASHERSITE.dwg 04/02/13 08:03

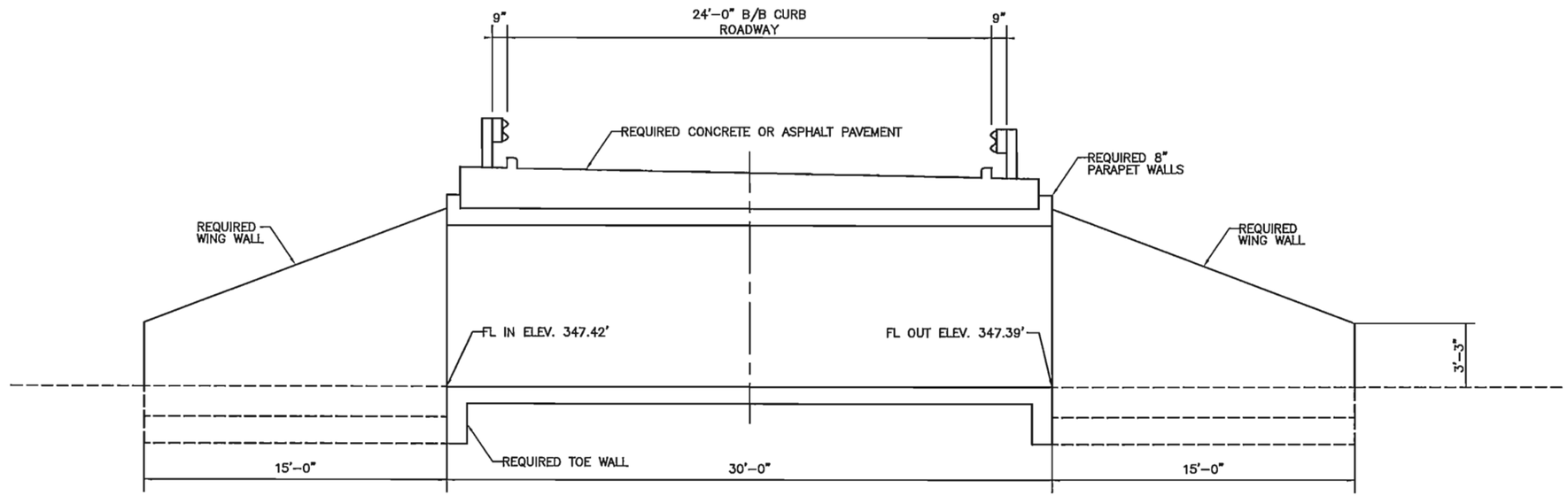

SECTION A – A

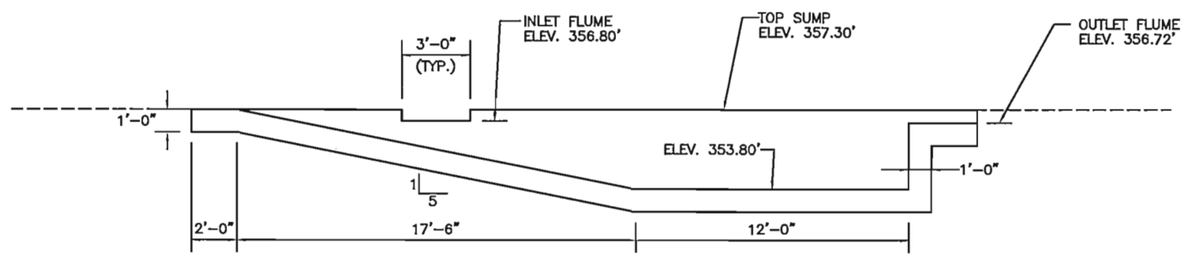

SECTION B – B

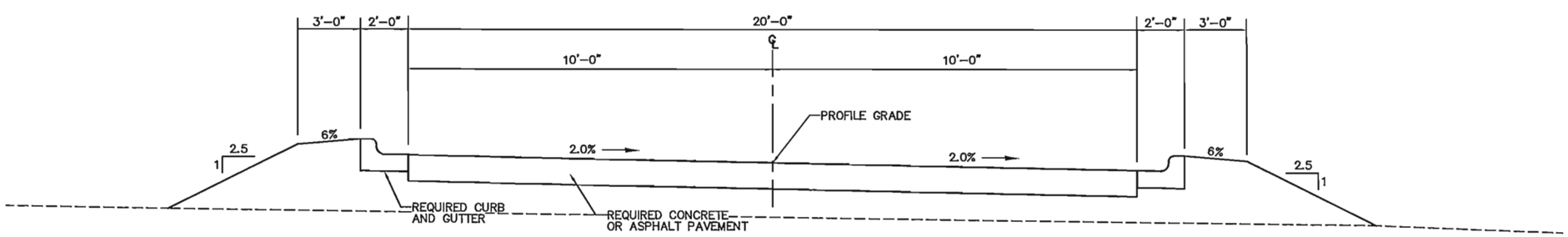

TYPICAL ROAD SECTION

TO BE USED FROM STATION 141+34.16 TO STATION 142+16.19
AND FROM STATION 142+39.81 TO STATION 143+07.54

V:\Johnny R\Carlson Projects\PRATT\CULVERT-SECTION.dwg 04/17/13 15:23

NO.	REVISIONS	BY	DATE	DES	DATE	SCALE
				DRN	3/4/2013	NONE
				CHK		
				APPD L.G.S.		

ATTACHMENT III-B-5
NORTH PRATT MINING, LLC
PRATT NO. 1 MINE P-3927
PRIMARY ROAD 1P STA 141+34.16 TO 143+39.42

PERC ENGINEERING CO., INC.
1408 Highway 78 West Jasper, Alabama 35501
P.O. Box 1712 Jasper, Alabama 35502
(205) 384-3553 Office (205) 384-3451 Fax

SHEET 2 OF 2

V:\Steve Miles\Steve Docs\Mines\North Pratt\Bankfull Calculations\NPMNPHR1PCS-BF.dwg 04/17/13 14:46

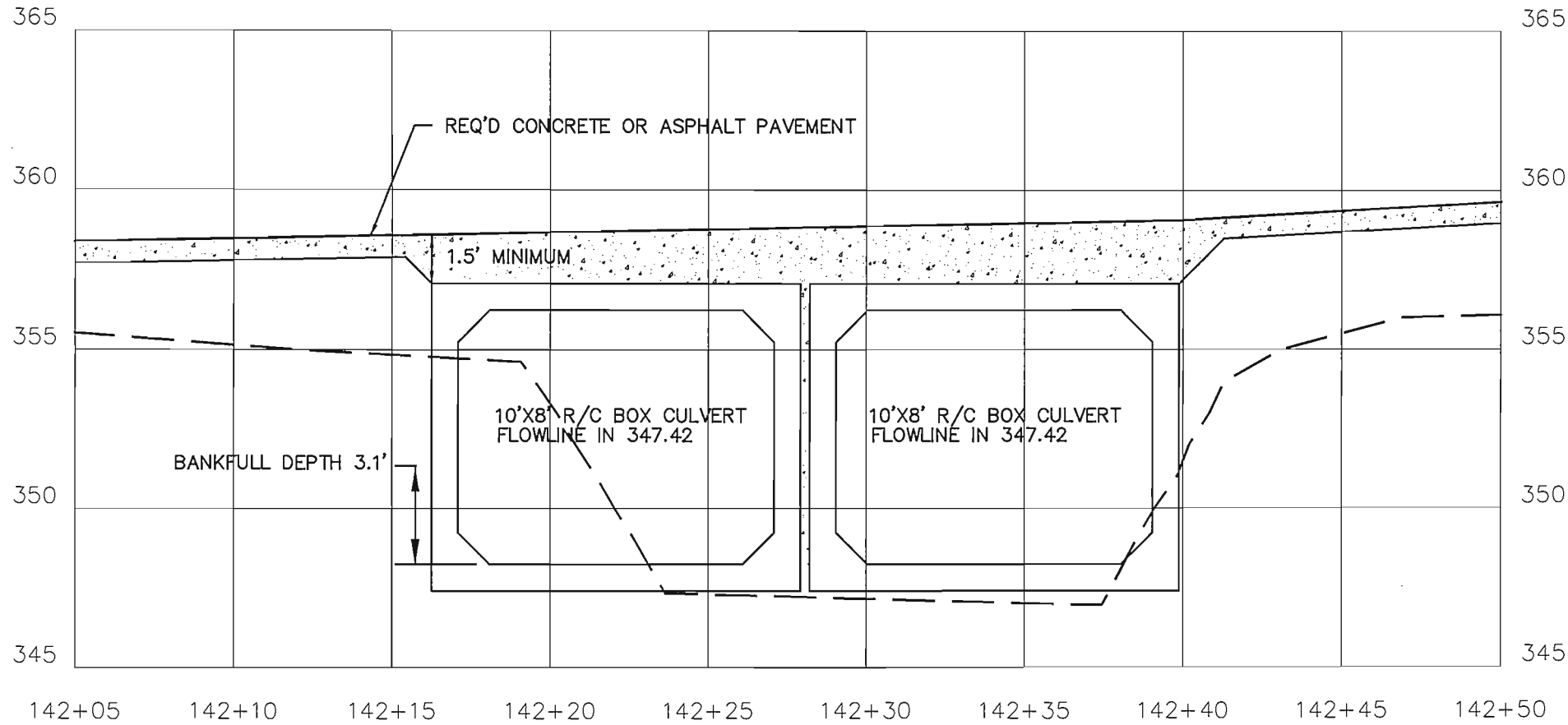

PROPOSED GRADE

EXISTING GRADE

PERC ENGINEERING CO., INC.
1606 Highway 78 West Jasper, Alabama 35501
P.O. Box 1712 Jasper, Alabama 35502
(205) 384-5553 Office (205) 384-9491 Fax

NORTH PRATT MINING, LLC
PRATT NO. 1 MINE
P-3972
PRIMARY ROAD 1P DS1P 142+28

DRAWN BY: S.D.M. DWG. NAME: CCSCHR4PCS-BF	DATE: 3/4/2013
APPROVED BY: L.G.S.	SCALE: H: 1"=5' V: 1"=5'

North Pratt Mining, LLC
Pratt No. 1 Mine
P-3972

Bankfull Calculations -- Manning's Equation

Natural Stream Channel

Drainage Area (mi^2)	Q (cfs)	Slope (ft/ft)	Cross-sectional Area (ft^2)	Wetted Perimater (ft)	Hydraulic Radius	Mannings n
1.91	283.13	0.028	36.24	21.69	1.67	0.045
	Channel					
Mannings Eq (cfs)	282.72					
Bank Full Depth (ft)	3.06					
Velocity (ft/s)	7.80					

Primary Road 1P Stream Crossing at DS1P 142+28

Drainage Area (mi^2)	Q (cfs)	Slope (ft/ft)	Cross-sectional Area (ft^2)	Wetted Perimater (ft)	Hydraulic Radius	Mannings n
1.91	283.13	0.0011	61.2	32.24	1.90	0.016
	Culverts					
Mannings Eq (cfs)	289.79					
Flow Depth (ft)	3.06					
Velocity (ft/s)	4.74					

Notes:

1. The bankfull flow depth for the natural stream and the crossing at DS1P 142+28 are approximately equal. Therefore, there will be no signaficant change in the characterists of the channel during a 1.5 year storm event with the culverts in place.

2. Bankfull flow was calculated from a 1.5 year storm event using the Regional Flood-Frequency Analysis (Region 1) for rural streams in Alabama (Q = 184 A^0.666). See Attached.

HY-8 Analysis Results

Culvert Summary Table - 10'x8'

Culvert Crossing: North Pratt Creek Crossing

Total Discharge (cfs)	Culvert Discharge (cfs)	Headwater Elevation (ft)	Inlet Control Depth(ft)	Outlet Control Depth(ft)	Flow Type	Normal Depth (ft)	Critical Depth (ft)	Outlet Depth (ft)	Tailwater Depth (ft)	Outlet Velocity (ft/s)	Tailwater Velocity (ft/s)
0.01	0.01	347.99	0.57	0.0*	1-S2n	0.00	0.00	0.00	0.01	0.51	0.00
40.01	40.01	348.39	0.97	0.87	2-M2c	0.82	0.50	0.50	0.01	4.02	0.00
80.01	80.01	348.79	1.36	1.37	2-M2c	1.26	0.79	0.79	0.01	5.07	0.00
120.01	120.01	349.22	1.80	1.79	2-M2c	1.68	1.04	1.04	0.01	5.79	0.00
160.01	160.01	349.59	2.17	2.16	2-M2c	2.03	1.26	1.26	0.01	6.37	0.00
200.01	200.01	349.93	2.51	2.51	2-M2c	2.38	1.46	1.46	0.01	6.86	0.00
240.00	240.00	350.25	2.83	2.83	2-M2c	2.70	1.65	1.65	0.01	7.28	0.00
280.00	280.00	350.56	3.14	3.14	2-M2c	3.01	1.83	1.83	0.01	7.66	0.00
289.79	289.79	350.64	3.22	3.21	2-M2c	3.09	1.87	1.87	0.01	7.75	0.00
360.00	360.00	351.13	3.71	3.71	2-M2c	3.60	2.16	2.16	0.01	8.33	0.00
400.00	400.00	351.40	3.98	3.98	2-M2c	3.89	2.32	2.32	0.01	8.63	0.00

HY-8 Analysis Results

Culvert Summary Table - 10'x8'

Culvert Crossing: North Pratt Creek Crossing

Total Discharge (cfs)	Culvert Discharge (cfs)	Headwater Elevation (ft)	Inlet Control Depth(ft)	Outlet Control Depth(ft)	Flow Type	Normal Depth (ft)	Critical Depth (ft)	Outlet Depth (ft)	Tailwater Depth (ft)	Outlet Velocity (ft/s)	Tailwater Velocity (ft/s)
0.01	0.01	347.99	0.57	0.0*	1-S2n	0.00	0.00	0.00	0.01	0.51	0.00
150.01	150.01	349.50	2.08	2.07	2-M2c	1.94	1.21	1.20	0.01	6.23	0.00
300.01	300.01	350.71	3.29	3.28	2-M2c	3.17	1.92	1.91	0.01	7.84	0.00
450.01	450.01	351.72	4.29	4.30	2-M2c	4.24	2.51	2.51	0.01	8.97	0.00
600.01	600.01	352.63	5.16	5.21	2-M2c	5.26	3.04	3.04	0.01	9.88	0.00
750.01	750.01	353.47	5.97	6.05	2-M2c	6.23	3.53	3.52	0.01	10.64	0.00
900.00	900.00	354.25	6.72	6.83	2-M2c	7.18	3.99	3.98	0.01	11.31	0.00
1050.00	1050.00	354.99	7.46	7.57	2-M2c	8.00	4.42	4.41	0.01	11.92	0.00
1200.00	1200.00	355.70	8.18	8.28	2-M2c	8.00	4.83	4.82	0.01	12.46	0.00
1350.00	1350.00	356.37	8.92	8.95	2-M2c	8.00	5.22	5.21	0.01	12.96	0.00
1383.00	1383.00	356.52	9.08	9.10	2-M2c	8.00	5.31	5.29	0.01	13.06	0.00

ALABAMA

Generalized least squares regression analysis, using contributing drainage area as the only explanatory variable, was applied to the four flood regions identified earlier. The flood-frequency relations for the four flood regions are summarized in table 2.

The accuracy of a flood-frequency relation can be expressed in two ways—the mean standard error of prediction (*SEp*) or as equivalent years of record. The *SEp* is a measure of how well the regression relation estimates flood magnitudes when applied to ungaged basins. The *SEp* is the square root of the mean square error of prediction, *MSEp*. The *MSEp* is the sum of two components—the mean square error resulting from the model and the sampling mean square error, which results from estimating the model parameters from samples of the population. The *SEp* ranged from a minimum of 18 percent (region 2) to a maximum of 54 percent (region 3). The *SEp* also can be expressed as equivalent years of record (Hardison, 1971). These equivalent years of record (*EY*) represent the number of years of peak-discharge record that are needed to provide a flood estimate with accuracy equal to that of the regression relation flood estimate. For example, the 100-year flood can be estimated from the region-1 regression relation with the same degree of accuracy as that obtained from 10 years of actual peak-discharge record. The equivalent years of record is a function of the accuracy of the regression equations, the recurrence interval, and the average variance and the skew of peak flows at gaging stations (Hardison, 1971). Regression equations having similar *SEp* can have very different *EY* based on the differences between the average standard deviaton and skew of peak flows between regions. The *SEp* and the equivalent years of record for the regression relations are listed in table 3.

Table 2. Regional flood-frequency relations for rural streams in Alabama.

[Note: Associated mean standard errors of prediction and equivalent years of record are listed in table 3. *Q*, flood discharge, in cubic feet per second; *A*, contributing drainage area, in square miles]

Recurrence interval (years)	Regression equations for the indicated flood regions			
	Region 1	Region 2	Region 3	Region 4
1.5	$Q = 184\,A^{0.666}$	$Q = 126\,A^{0.663}$	$Q = 254\,A^{0.565}$	$Q = 157\,A^{0.586}$
2	$Q = 250\,A^{0.656}$	$Q = 166\,A^{0.660}$	$Q = 322\,A^{0.578}$	$Q = 204\,A^{0.590}$
5	$Q = 466\,A^{0.636}$	$Q = 291\,A^{0.652}$	$Q = 562\,A^{0.593}$	$Q = 367\,A^{0.590}$
10	$Q = 650\,A^{0.623}$	$Q = 393\,A^{0.648}$	$Q = 802\,A^{0.592}$	$Q = 499\,A^{0.588}$
25	$Q = 918\,A^{0.610}$	$Q = 532\,A^{0.645}$	$Q = 1{,}206\,A^{0.586}$	$Q = 692\,A^{0.584}$
50	$Q = 1{,}137\,A^{0.601}$	$Q = 642\,A^{0.643}$	$Q = 1{,}559\,A^{0.583}$	$Q = 857\,A^{0.580}$
100	$Q = 1{,}368\,A^{0.593}$	$Q = 763\,A^{0.641}$	$Q = 1{,}930\,A^{0.584}$	$Q = 1{,}036\,A^{0.578}$
200	$Q = 1{,}609\,A^{0.587}$	$Q = 899\,A^{0.638}$	$Q = 2{,}306\,A^{0.588}$	$Q = 1{,}229\,A^{0.577}$
500	$Q = 1{,}943\,A^{0.579}$	$Q = 1{,}109\,A^{0.634}$	$Q = 2{,}798\,A^{0.598}$	$Q = 1{,}502\,A^{0.576}$

Accuracy and Limitations of Flood-Frequency Estimates

The regression relations are valid for ungaged basins where the drainage area is within the minimum and maximum drainage areas used in the regression analysis. The range of applicable drainage areas for each flood region is as follows:

Flood region 1	0.50 to 1,027 mi^2
Flood region 2	0.44 to 1,097 mi^2
Flood region 3	0.45 to 607 mi^2
Flood region 4	0.76 to 1,344 mi^2

Table 3. Accuracy of regional flood-frequency relations for rural streams in Alabama.

[n= number of streamgages used in regional regressions]

Recurrence interval (years)	Region 1 (n=100)		Region 2 (n=33)		Region 3 (n=19)		Region 4 (n=64)	
	Mean standard error of prediction (percent)	Equivalent years of record	Mean standard error of prediction (percent)	Equivalent years of record	Mean standard error of prediction (percent)	Equivalent years of record	Mean standard error of prediction (percent)	Equivalent years of record
1.5	36	3	47	2	54	2	37	4
2	34	3	41	2	48	2	33	5
5	33	4	29	6	36	6	26	11
10	33	6	23	14	30	12	24	18
25	34	8	18	31	26	26	25	26
50	36	9	18	39	24	38	27	28
100	38	10	18	40	23	50	29	28
200	40	10	22	36	24	59	33	27
500	43	11	27	30	25	63	37	26

Civil Software Design -- SEDCAD+ Version 3.1
Copyright (C) 1987-1992. Pamela J. Schwab. All rights reserved.

Company Name: PERC ENGINEERING COMPANY
Filename: C:\SEDCAD3\MRPRTBM User: sri
Date: 05-30-1997 Time: 04:17:03
M R Pratt One, LLC Pratt Mine Berm Design
Storm: 6.80 inches, 25 year-24 hour, SCS Type II
Hydrograph Convolution Interval: 0.1hr

RECEIVED JUL 1997 SURFACE MINING COMMISSION

SUBWATERSHED/STRUCTURE INPUT/OUTPUT TABLE

-Hydrology-

JBS	SWS	Area (ac)	CN	UHS	Tc (hrs)	K (hrs)	X	Base-Flow (cfs)	Runoff Volume (ac-ft)	Peak Discharge (cfs)
111	1	240.00	75	M	0.215	1.019	0.319	0.0	79.47	755.19
111	2	140.00	75	M	0.215	0.679	0.319	0.0	46.36	440.53
111	3	83.00	68	M	0.135	0.232	0.319	0.0	22.47	232.23
111	4	7.00	81	F	0.065	0.015	0.319	0.0	2.69	31.11
111	5	40.00	81	F	0.140	0.015	0.319	0.0	15.40	173.59
111	6	710.00	70	S	1.019	0.000	0.000	0.0	204.29	498.12
		Type: Null			Label: Pratt One Berm					
111	Structure	1220.00							370.69	
111	Total IN/OUT	1220.00							370.69	1382.41

1383

TAKEN FROM
P-3768
ASMC PERMIT FILE

Taken from P-3768 ASMC Permit File

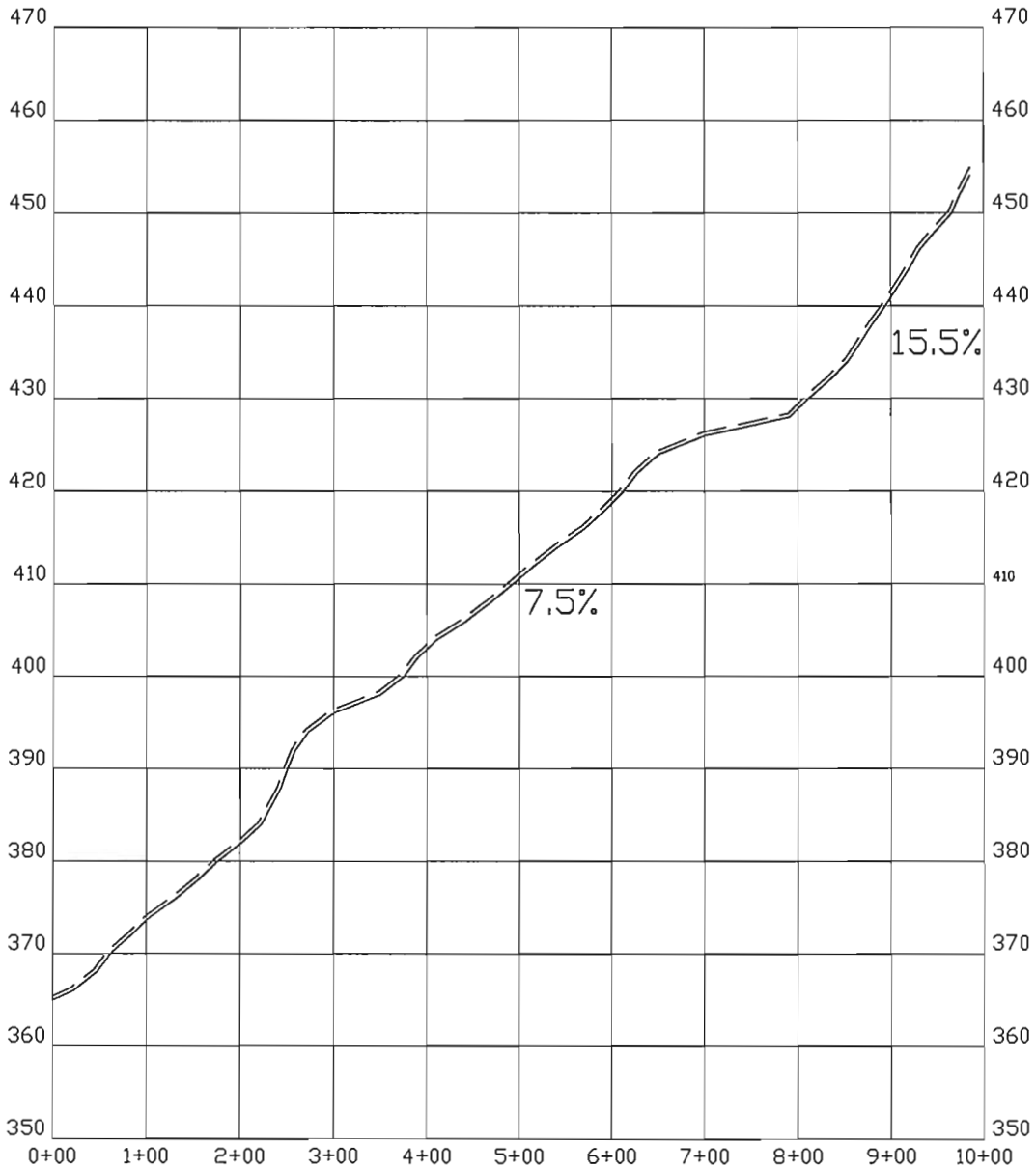

Primary Road 2P

——————— *EXISTING GRADE*

— — — — *PROPOSED GRADE*

NOTES:

1. *FINISHED GRADES SHOWN HEREON MAY VARY FROM BETWEEN 0% AND 17%.*

PERC ENGINEERING CO., INC.
1606 Highway 78 West Jasper, Alabama 35501
P.O. Box 1712 Jasper, Alabama 35502
(205) 384-3553 Office (205) 384-5491 Fax

NORTH PRATT MINING, LLC
PRATT NO. 1 MINE
P-3972
PRIMARY ROAD PROFILE

DRAWN BY: S.D.M. DWG. NAME: NPMNPHR2P	DATE: 3/15/2013
APPROVED BY: S.D.M.	SCALE: 1" = 200' H 1" = 20' V

V:\Steve Mics\Steve Docs\Pnet\North Pratt\Roadcad\NPMNPHR2P.dwg 03/15/13 09:01