TYPICAL HAUL ROAD
CUT SECTION

NO SCALE

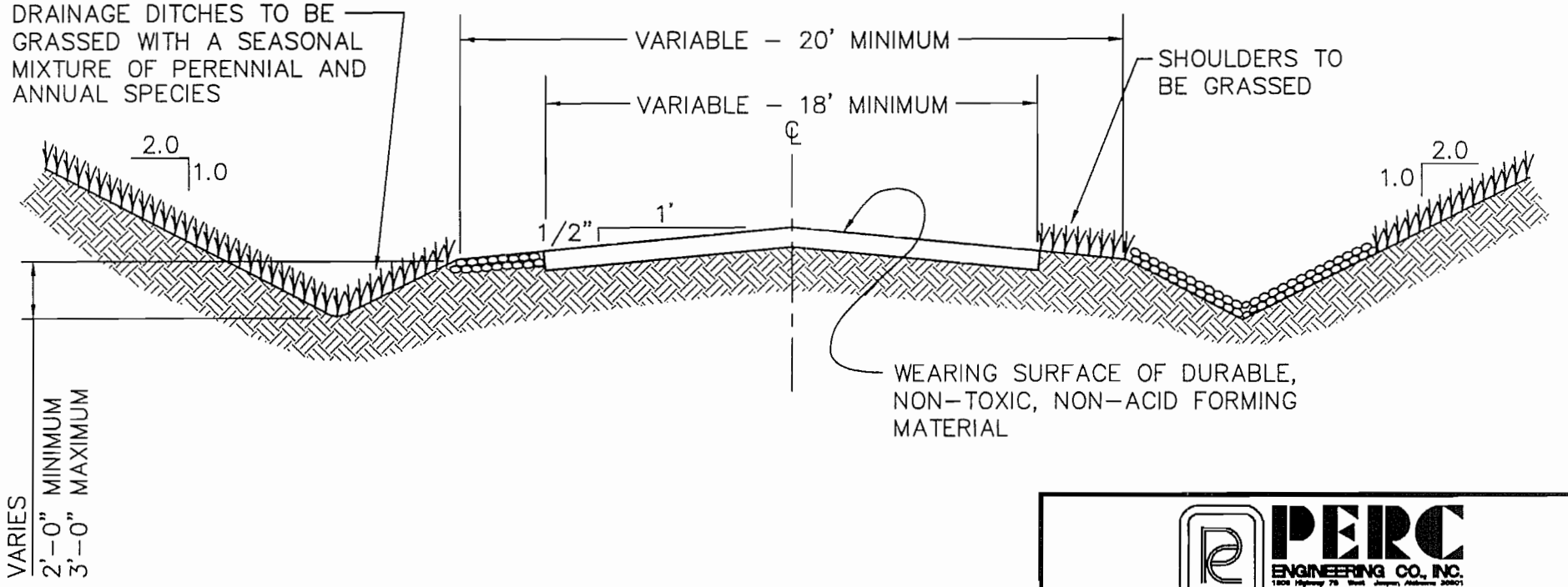

PERC ENGINEERING CO., INC.

TYPICAL CUT SECTION
PRIMARY HAUL ROAD

DRAWN BY:	K.D.P.	DATE:	2–3–97
DWG. NAME:	TYPHAULC		
APPROVED BY:	S.R.I.	SCALE:	NONE

ATTACHMENT III.–B.–5.

K:\S\TYPHAULC 02/03/97 15:56

TYPICAL HAUL ROAD
FILL SECTION

NO SCALE

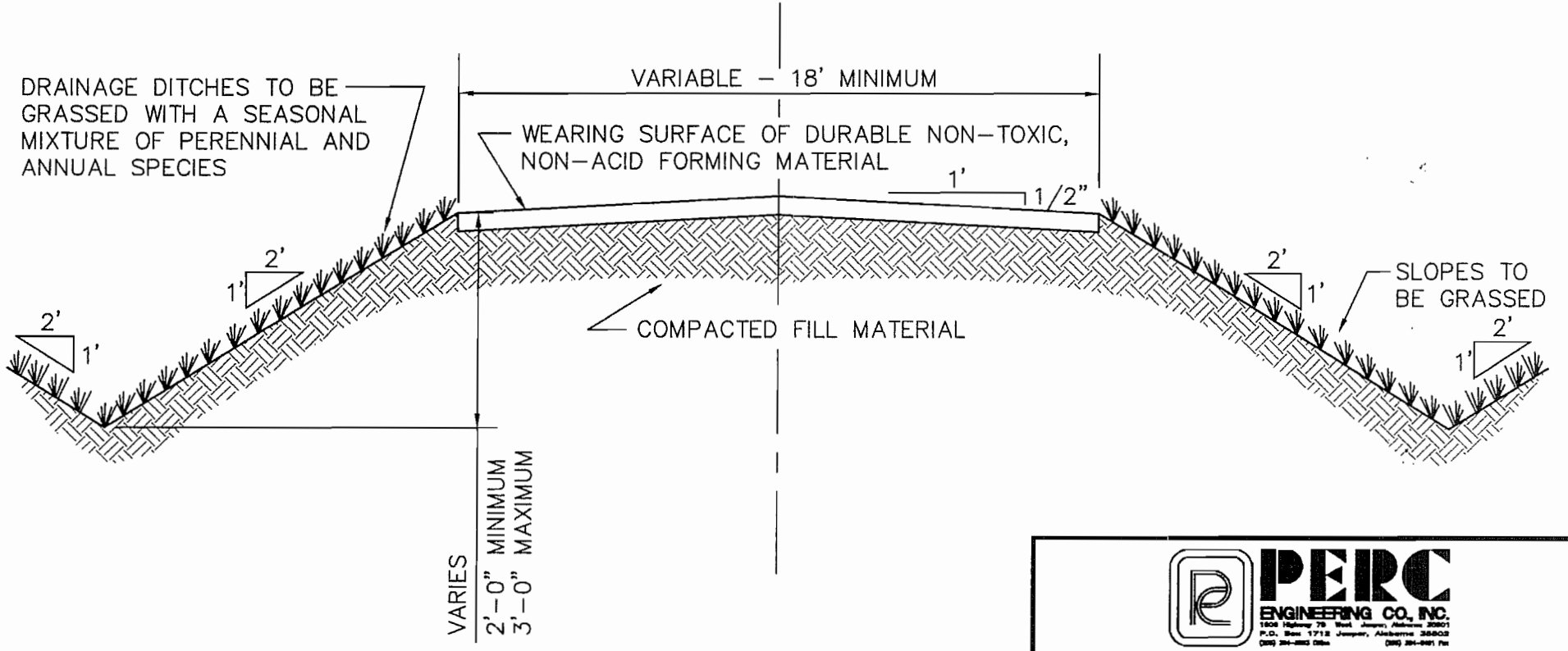

PERC ENGINEERING CO., INC.

TYPICAL FILL SECTION
PRIMARY HAUL ROAD

DRAWN BY:	K.D.P.	DATE:	2–3–97
DWG. NAME:	TYPHAULF		
APPROVED BY:	S.R.I.	SCALE:	NONE

ATTACHMENT III.–B.–5.

K:\S\TYPHAULF 02/03/97 16:01

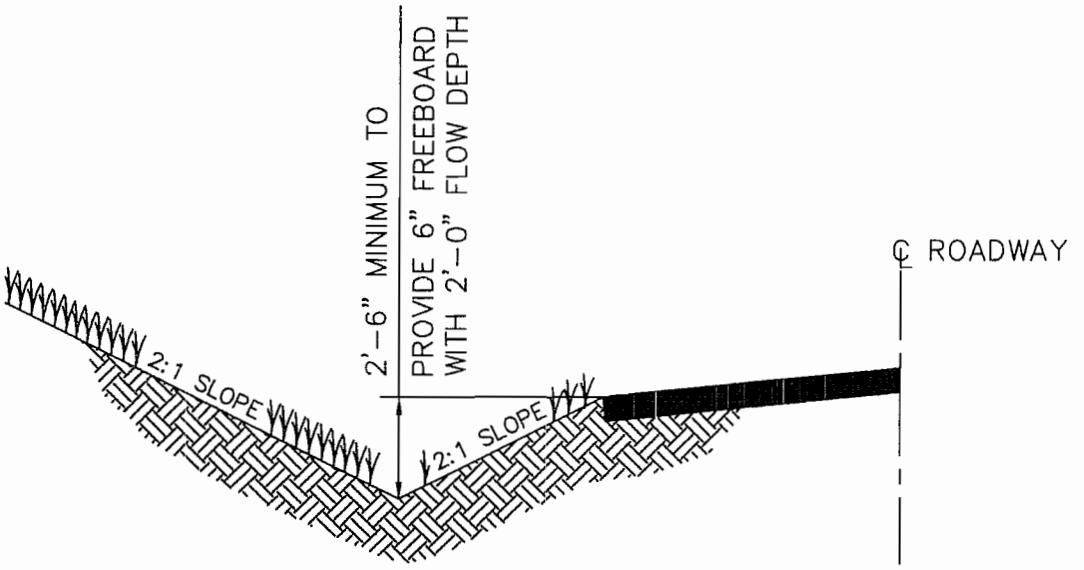

MINIMUM DITCH GRADIENT = 1%

MAXIMUM DITCH GRADIENT = 5%

DITCH CHANNEL TO BE VEGETATED WITH A MIXTURE OF BERMUDA GRASS, FESCUE, AND LESPEDEZA TO CONFORM TO CLASS "D" RETARDANT CLASS.

PERC ENGINEERING CO., INC.
1808 Highway 78 West Jasper, Alabama 35501
P.O. Box 1712 Jasper, Alabama 35502
(205) 384-5963 Office (205) 384-9951 Fax

TYPICAL PRIMARY ROADWAY DITCH CROSS SECTION

DRAWN BY:	K.D.P.	DATE:	2-4-97
DWG. NAME:	PRIMROAD		
APPROVED BY:	R.E.P.	SCALE:	NONE

K:\S\PRIMROAD 02/04/97 08:36

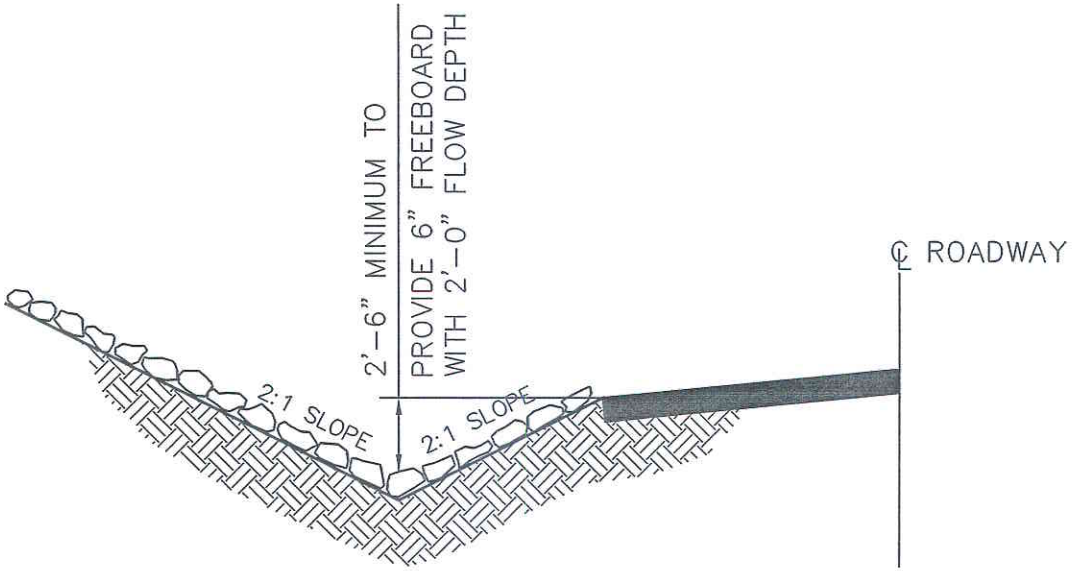

DITCH GRADIENT 5% TO 10%

DITCH CHANNEL TO BE LINED WITH NON-ERODIBLE NON-TOXIC, NON-ACID FORMING SANDSTONE OR LIMESTONE RIP-RAP. THE RIP-RAP WILL BE "CLASS 1" RIP-RAP AND HAVE A MINIMUM THICKNESS OF 12".

PERC ENGINEERING CO., INC.
1808 Highway 78 West Jasper, Alabama 35501
P.O. Box 1712 Jasper, Alabama 35502
(205) 384-5553 Office (205) 384-9491 Fax

TYPICAL PRIMARY ROADWAY DITCH CROSS SECTION

DRAWN BY:	S.D.M.	DATE:	11/8/2011
DWG. NAME:	PRIMRD1		
APPROVED BY:	L.G.S.	SCALE:	NONE

\\Perc600\perc_eng\Steve Miles\Steve Docs\Typicals\VI-B-5 Primary Road\Primrd1.dwg 11/08/11 09:43

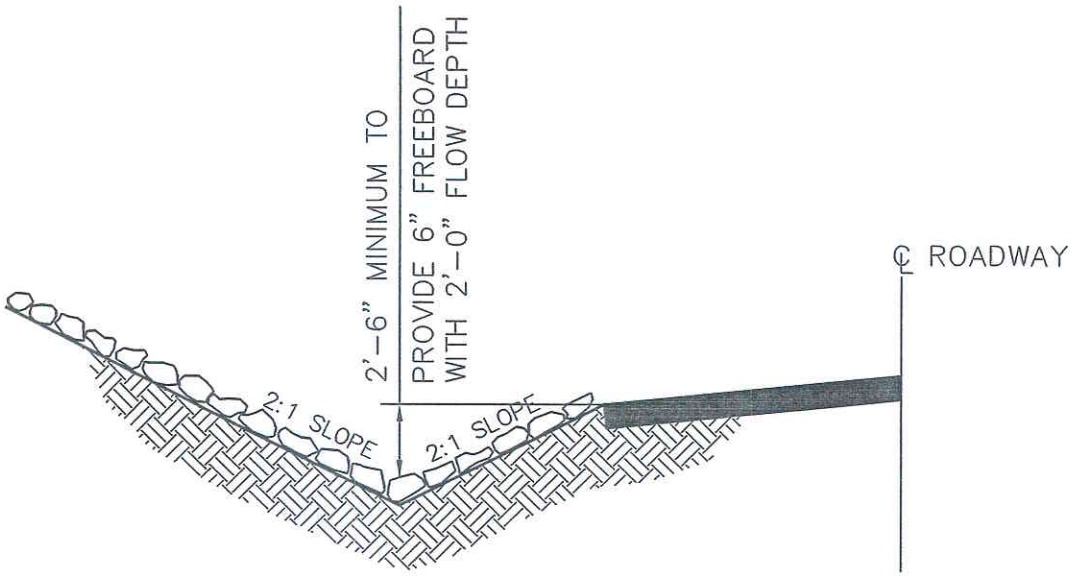

DITCH GRADIENT 11% TO 17%

DITCH CHANNEL TO BE LINED WITH NON-ERODIBLE NON-TOXIC, NON-ACID FORMING SANDSTONE OR LIMESTONE RIP-RAP. THE RIP-RAP WILL BE "CLASS 2" RIP-RAP AND HAVE A MINIMUM THICKNESS OF 16".

PERC ENGINEERING CO., INC.
1608 Highway 78 West Jasper, Alabama 35501
P.O. Box 1712 Jasper, Alabama 35502
(205) 384-6553 Office (205) 384-9491 Fax

TYPICAL PRIMARY ROADWAY DITCH CROSS SECTION

DRAWN BY:	S.D.M.	DATE:	11/8/2011
DWG. NAME:	PRIMRD2		
APPROVED BY:	L.G.S.	SCALE:	NONE

\\Perc2008\perc_eng\Steve Miles\Steve Docs\Typicals\III-B-5 Primary Road\Primrd2.dwg 11/08/11 09:41