# TYPICAL ROAD DITCH 0.5% – 10.0%
# VEGETATED CHANNEL CROSS–SECTION

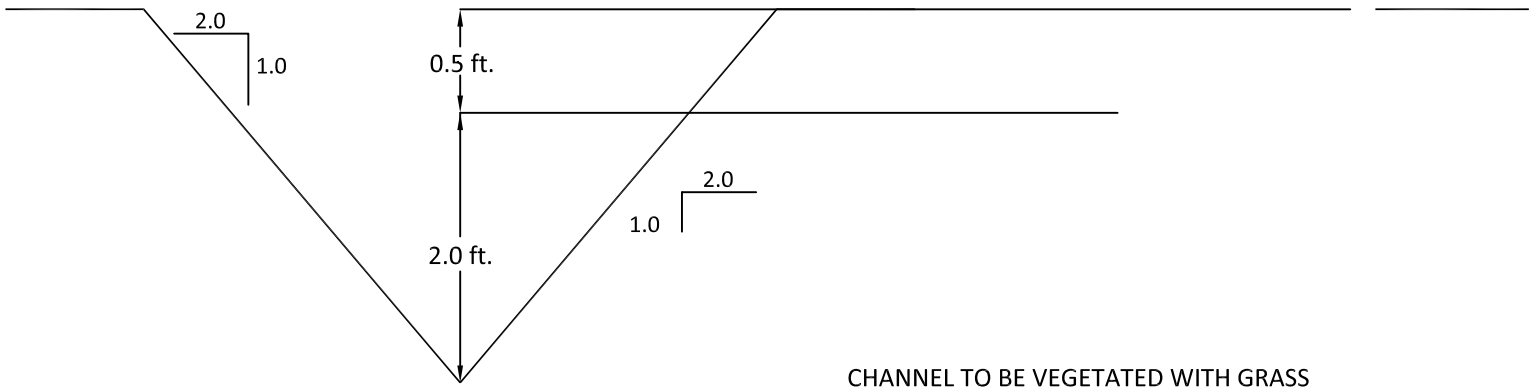


CHANNEL TO BE VEGETATED WITH GRASS
MIXTURE, PREDOMINANTLY BERMUDA & FESCUE.

Design Discharge: 3.0 cfs
Limiting Velocity: 5.0 fps

| | 0.5 % Slope | | 10.0% Slope | |
|---|---|---|---|---|
| | STABILITY | CAPACITY | STABILITY | CAPACITY |
| Depth: | 1.22 ft. | 2.03 ft. | 0.65 ft. | 1.01 ft. |
| Depth w/ Freeboard: | 1.72 ft. | 2.53 ft. | 1.15ft. | 1.51 ft. |
| Top Width: | 4.89 ft. | 8.11 ft. | 2.59 ft | 4.03 ft. |
| Top Width w/Freeboard: | 6.89 ft. | 10.11 ft. | 4.59 ft. | 6.03 ft. |
| VELOCITY: | 1.00 fps | 0.36 fps | 3.57 fps | 1.48 fps |
| X-SECTION AREA: | 2.99 sq. ft. | 8.23 sq. ft. | 0.84 sq. ft. | 2.03 sq. ft. |
| HYDRAULIC RADIUS: | 0.546 | 0.907 | 0.29 | 0.451 |
| FROUDE NUMBER: | 0.23 | 0.06 | 1.11 | 0.37 |
| ROUGHNESS COEFFICIENT: | 0.0700 | 0.2706 | 0.0577 | 0.1873 |

DSM
DESIGN GROUP, LLC
ENGINEERING / SURVEYING
1400 VIKING DRIVE
JASPER, ALABAMA 35501
TELEPHONE: (205) 221-6262

# TYPICAL ROAD DITCH 10.0% – 15.0%
# RIP–RAP CHANNEL CROSS–SECTION

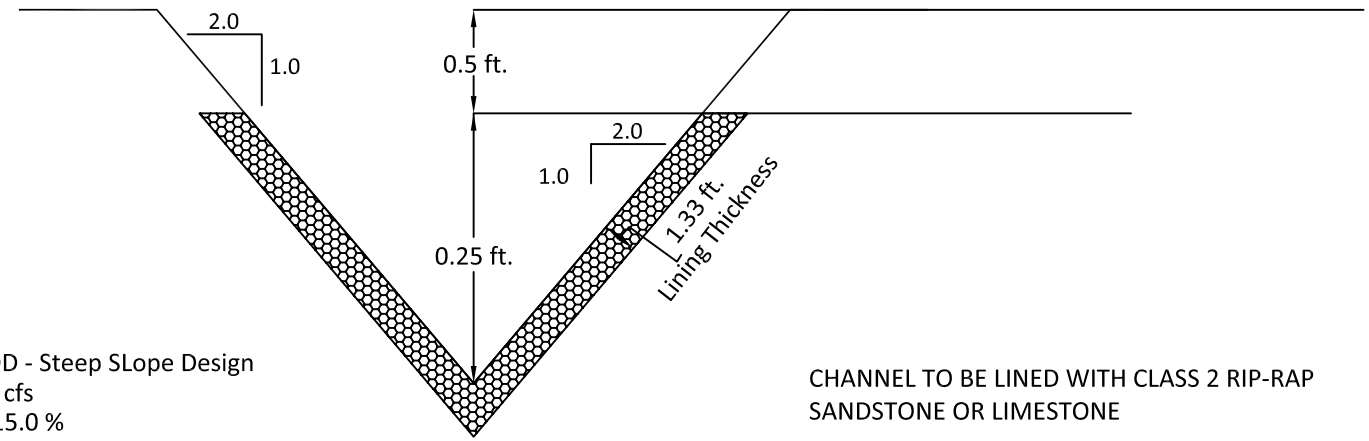


SIMONS/OSM METHOD - Steep SLope Design
Design Discharge: 3.0 cfs

| | 10.0 % | 15.0 % |
|---|---|---|
| Depth: | 0.21 ft. | 0.16 ft. |
| Depth w/ Freeboard: | 0.71 ft. | 0.66 ft. |
| Top Width: | 0.82 ft. | 0.64 ft. |
| Top Width w/Freeboard: | 2.82 ft. | 10.11 ft. |
| VELOCITY: | ** | ** |
| X-SECTION AREA: | 0.08 sq. ft. | 0.05 sq. ft. |
| HYDRAULIC RADIUS: | 0.092 | 0.072 |
| FROUDE NUMBER: | ** | ** |
| MANNING'S N: | ** | ** |
| Dmin: | 4.00 in. | 4.00 in. |
| D50: | 12.00 in. | 12.00 in. |
| Dmax: | 15.00 in. | 15.00 in. |

Velocity and Manning's n calculations may not apply for this method.

CHANNEL TO BE LINED WITH CLASS 2 RIP-RAP
SANDSTONE OR LIMESTONE

DSM
DESIGN GROUP, LLC
ENGINEERING / SURVEYING
1400 VIKING DRIVE
JASPER, ALABAMA 35501
TELEPHONE: (205) 221-6262

# TYPICAL ROAD DITCH 10.0% – 15.0%
# VEGETATED CHANNEL CROSS–SECTION

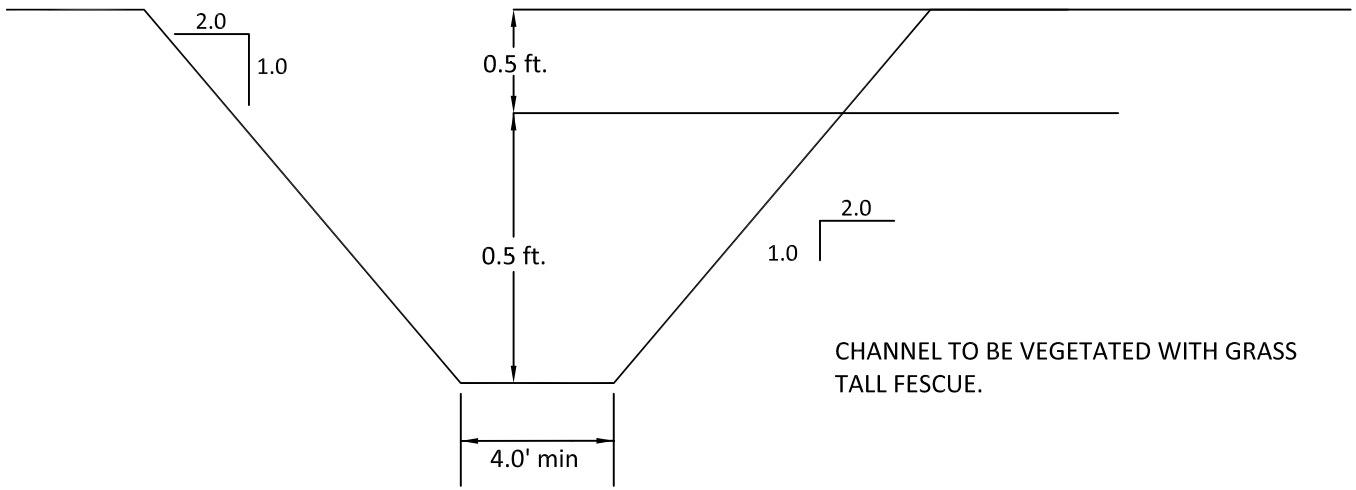


CHANNEL TO BE VEGETATED WITH GRASS
TALL FESCUE.

Design Discharge: 3.0 cfs
Limiting Velocity: 5.0 fps

| | 10.0 % Slope | | 15.0% Slope | |
|---|---|---|---|---|
| | STABILITY | CAPACITY | STABILITY | CAPACITY |
| Depth: | 0.26 ft. | 0.51 ft. | 0.23 ft. | 0.45 ft. |
| Depth w/ Freeboard: | 0.76 ft. | 1.01 ft. | 0.73 ft. | 0.95 ft. |
| Top Width: | 5.04 ft. | 6.05 ft. | 4.92 ft | 5.80 ft. |
| Top Width w/Freeboard: | 7.04 ft. | 8.05 ft. | 6.92 ft. | 7.80 ft. |
| VELOCITY: | 2.54 fps | 1.16 fps | 2.92 fps | 1.36 fps |
| X-SECTION AREA: | 1.18 sq. ft. | 2.58 sq. ft. | 1.03 sq. ft. | 2.21 sq. ft. |
| HYDRAULIC RADIUS: | 0.228 | 0.410 | 0.204 | 0.367 |
| FROUDE NUMBER: | 0.93 | 0.31 | 1.13 | 0.39 |
| ROUGHNESS COEFFICIENT: | 0.0688 | 0.2233 | 0.0683 | 0.2180 |

DSM
DESIGN GROUP, LLC
ENGINEERING / SURVEYING
1400 VIKING DRIVE
JASPER, ALABAMA 35501
TELEPHONE: (205) 221-6262