Applicant: Ridgeholm Energy Partners, LLC
Mine Name: John Poe Mine
Permit Number: P-3981

Part III - Operation Plan

A. General Operation Information

1. Describe the type and method of coal mining procedures and major equipment to be used. (780.11)

   See Attachment III-A-1

   Major equipment to be used includes but may not be limited to:

   - Backhoes
   - Bulk ANFO Trucks
   - Off Road Haulers
   - Loaders
   - Auger - Salem 1500-B
   - Service Trucks
   - Dozers
   - Track Backhoes
   - Drills

2. Describe the sequence and timing of increments to be mined (as shown on permit map) over the total life of the permit. (780.11)

   The timing increments are as follows:

Increment No.	Acres	From	Estimate Life
1	70	Issuance of Permit	12 Months
2	63	End of Increment #1	12 Months
3	4	End of Increment #1	Life of Permit
4	6	Issuance of Permit	Life of Permit

The sequence of mining operations will be generally as follows:

1) Construction of Sediment Control Structures
1) Clearing and Grubbing
1) Topsoil & Prime Farmland Removal followed by stockpiling.
1) Overburden Drilling and Blasting
1) Overburden Removal
6) Coal Recovery, including removal by augering, coal underlying the right-of-way of Dekalb County Roads 675, 676 and 880.
7) Re-grading
8) Placement of Topsoil and/or Primefarmland
8) Revegetation

ATTACHMENT III-A-1
TYPE AND METHOD OF COAL MINING PROCEDURES

The area method of surface mining will be used to mine the Upper Cliff Coal Seam, all alone by it self, within this Permit Boundary. Preparation will consist of (a) timber removal (b) Topsoil & Prime Farmland Removal followed by stockpiling. (c) drilling and blasting of overburden (d) overburden removal (e) coal removal (f) regrading g) Topsoil & Prime Farmland Removal followed by stockpiling. and revegetation. Once the site has been regraded and topsoiled, soil samples will be analyzed (where required) and proper nutrients will be added before revegetation. Any problem that may arise will be handled by proper consulting personnel utilizing various support equipment and support personnel. All approved drainage controls will be implemented within their respective areas as per approved plans prior to disturbance there within.

Ridgeholm Energy Partners, LLC will have a mobile office trailer that serve as corporate headquarters that are located within the NW/NW of Section 29, Township 5 South, Range 9 East, Southeast of County Road 676. This office trailer will not be located within the permit boundary. See Permit Map and Attachment III-A-I for location of the office trailer.

Basin 001P will be constructed and certified to the regulatory authority prior to commencing mining activities within Increment No. 1. The material excavated from the normal pool area will be either placed on the area adjacent to and upgrade from basin 001P so as not to block the natural drainage paths or the suitable material will be utilized for the embankment construction. There will be approximately 30,000 cubic yards of cut in the normal pool excavation and 7,000 cubic yards of fill for the embankment resulting in approximately 23,000 cubic yards to be placed adjacent to Basin 001 to the North and to the West of the Basin. When it is placed in the three areas identified on the Detailed Design Plans Plan View Map it will only be 4 feet thick. See cross section A-A', B-B' and C-C' in the Basin 001P Detailed Design Plans. The drainage paths upstream of the Normal Pool area will not be blocked by mine spoil or material excavated from the Basin Normal Pool area. There will be no problem placing the excavated material on either side of the drainage paths, along with mine spoil, so as not to block the flow of rain-fall run-off down gradient. Drainage will also be routed to Basin 001P via Diversion A-A'.

Mining within Increment No. 1 will commence along the Upper Cliff Coal Seam outcrop located approximately 1300' Southeast of County Road 675, at the North Boundary of the South ½ of the SE/NW and SW/NW of said Section 29 ,oriented Southwest to Northeast almost

parallel to County Road 675. Spoil material from the first pits will be spoiled downslope from the coal outcrop West and Northwest of Basin 001P. This spoil will be placed in a manner such that the drainage paths will not be blocked and drainage can flow unimpeded into Basin 001P without impounding any water. The spoil material from the following pits will be spoiled within subsequent open pits. Pits will generally align in a Southwest to Northeast direction with advancement of mining to the Northwest. Mining will continue in this manner until the limits of Increment No. 1 are reached. At that time a decision to Auger the final higwall will be made and either Augering will occur followed by reclamation or reclamation will follow the completion of the final mine cut.

Reclamation of Auger Holes

Within 72 hours of completing each hole each auger hole will be sealed by backfilling with impervious, non-combustible clay material to a minimum of five (5) feet above the top of the auger hole and compacted to provide an impervious seal. The clay material will be obtained within the Bonded Permit Boundary.

See Attachment III-A-6, Typical Auger Mining Opening Sealing Plan.

Mining within Increment No. 2 will be the relocation of mining equipment to the SE/NE & NE/SE in said Section 29. Basin 004P will be constructed and certified to the regulatory authority prior to commencing mining activities within Increment No. 2. The Upper Cliff coal seam does not outcrop in Increment No. 2 therefore the construction of Basin 004 will involve the construction of the Basin in two Phases. 004P Phase I will involve the construction of the embankment, spillway system and sump upstream of the embankment with the sump sediment volume sized basin on the anticipated acres disturbed for the construction of the normal pool area 004P Phase II. With the completion of Basin 004P Phase I it will be certified to the regulatory authority. 004P Phase I will be followed by construction of the normal pool area 004P Phase II. The normal pool area will be excavated down to the Upper Cliff coal seam followed by the removal and stockpiling of the coal seam in an area where drainage will flow back into the normal pool area. The material will be placed in the Temporary Spoil Fill No. 1 no closer than 100 feet from the normal pool area of Basin 004P Phase II and will be mined through as mining progresses West. Assuming a two acre pond approximately 230,000 cubic yards of material will be excavated from the normal pool area 004P Phase II and placed in the Temporary Spoil Fill No. 1 in four (4) feet lifts compacted to 90% of Standard Proctor Density with 2.5 horz. To 1 vert. Slopes on all four sides in a manner such that the drainage will run back into the sump area 004P Phase I. See the attached Temporary Spoil Fill No. 1 Detailed Design Plans. Once the coal is removed from the normal pool area 004P Phase II cut #1 of Increment No. 2 will be drilled and blasted into the Normal Pool area 004P Phase II followed by grading to construct the 004P Phase II Basin. The

normal pool area of Basin 004P Phase II will be sloped and lined, up to the normal pool elevation, with 1.0 foot of clay material to minimize infiltration and to provide a stable pool level with the clay placed in 6" lifts compacted to 95% of the standard proctor density. With the completion of the normal pool area of Basin 004P it will be certified to the regulatory authority.
Mining of Increment No. 2 will then commence adjacent to Basin 004P with mine cuts oriented South to North with advancement of mining to the West. The first mine cut of spoil material will be spread over the Basin 004P Phase II Normal Pool Area. As mining progresses to the West this Temporary Spoil Fill No. 1 will be mined thru and placed in the previous cuts areas. Mining will continue in this manner until the limits of Increment No. 2 are reached. At that time a decision to Auger the final higwall will be made and either Augering will occur followed by reclamation or reclamation will follow the completion of the final mine cut.

Reclamation of Auger Holes

Within 72 hours of completing each hole each auger hole will be sealed by backfilling with impervious, non-combustible clay material to a minimum of five (5) feet above the top of the auger hole and compacted to provide an impervious seal. The clay material will be obtained within the Bonded Permit Boundary.

See Attachment III-A-6, Typical Auger Mining Opening Sealing Plan.

See Attachment III-B-4 Temporary Spoil Fill No. 1 Detailed Design Plans

See Attachment III.-A.-1. Operations Map.
See Attachment III.-A.-1(a). Typical Auger Mining layout.

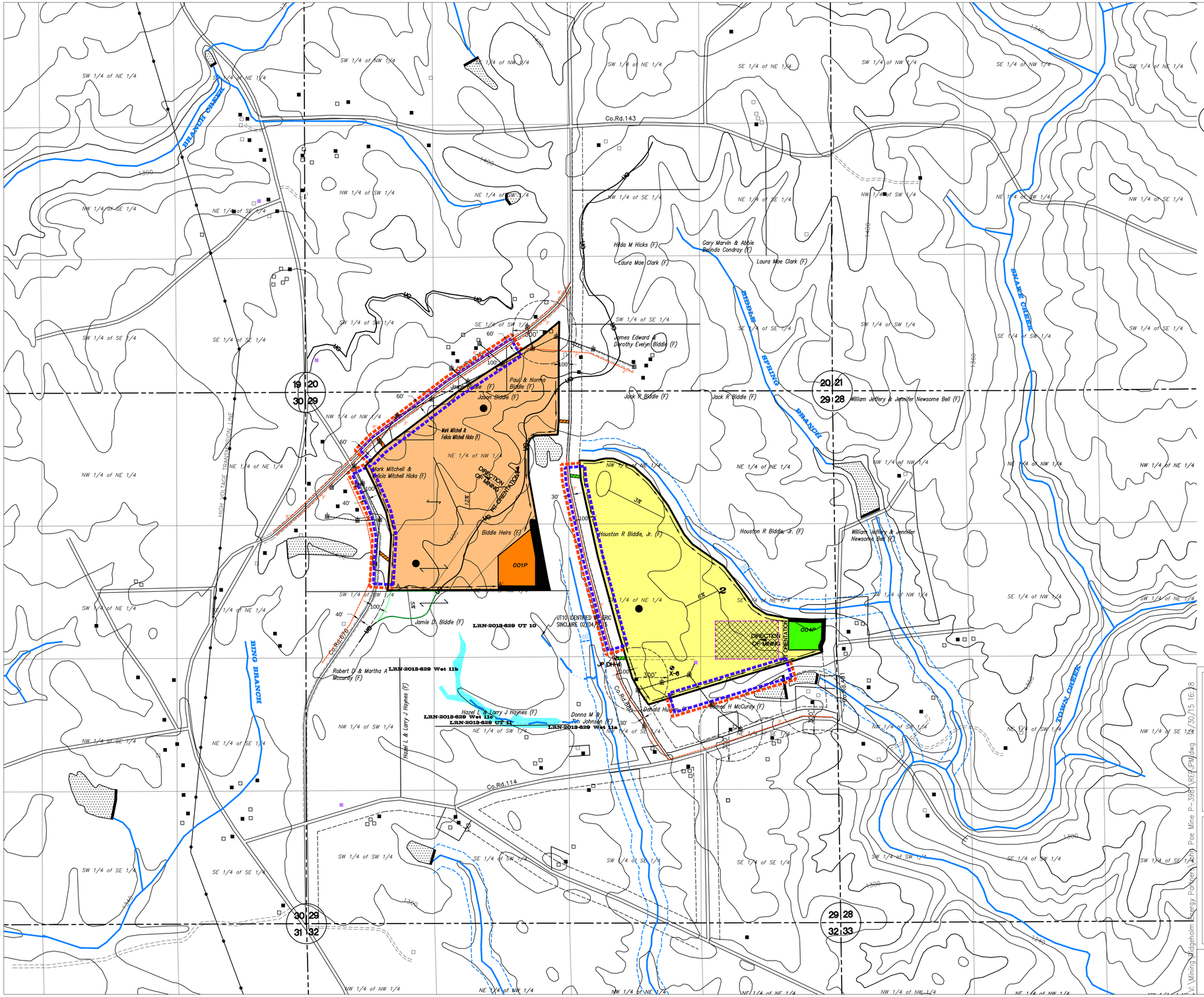

LEGEND

- Permit Boundary
- Previously Surface Mined by Others
- Occupied Dwelling
- Unoccupied Dwelling
- Out Buliding (Barn, Garage, Etc.)
- 700 Surface Contour
- 001P Sediment Basin
- Perennial Stream
- 100' Stream Offset
- Intermittent Stream
- Natural Drainage Course
- County Road (Paved unless otherwise designated)
- Road (Private unless otherwise shown)
- Primary Road
- Ancillary Road
- Impounded Water
- Property Line other than Forty Line
- Land Hook
- (M) Indicates Mineral Ownership
- (S) Indicates Surface Ownership
- (F) Indicates Surface and Mineral Ownership
- 100' Setback from Road
- UC Upper Cliff Coal Outcrop
- Diversion Ditch
- Temporary Spoil Fill No. 1
- Area bonded under Increment No. 1
- Area bonded under Increment No. 2
- Area bonded under Increment No. 3
- Area bonded under Increment No. 4
- Coal Stockpile, Location Subject to Change
- Auger Mining Extents
- 3" Waterlines along County Road
- Power Line/Power Pole
- Wetlands (U.S. Army Corp of Engineers jurisdiction)

PERC ENGINEERING CO., INC.
1606 Hwy. 78 West Jasper, AL 35501/P.O. Box 1712-35502
(205) 384-5553 Office (205) 295-3114 Fax

RIDGEHOLM ENERGY PARTNERS, LLC.
JOHN POE MINE / P-3981
ATTACHMENT III-A-1
OPERATION MAP

.DWG NAME:	REPJPM	DATE:	06-18-2015
DRAWN BY:	S.A.E.	SCALE:	1"=500'
APPROVED BY:	T.S.T.	JOB NUMBER:	15-04482-002

V:\Mining\Ridgeholm Energy Partners\John Poe Mine P-3981\REP(JPM).dwg 7/30/15 16:28

TEMPORARY SPOIL FILL NO. 1
ATTACHMENT III-B-4

RIDGEHOLM ENERGY PARTNERS LLC
JOHN POE MINE
P-3981

FOR

ALABAMA SURFACE MINING COMMISSION

BY

PERC ENGINEERING CO., INC.
P.O. BOX 1712
JASPER, AL 35502
PHONE: (205) 384-5553

JUNE 18, 2015

PERC
ENGINEERING CO., INC.

Telephone: (205) 384-5553
Facsimile: (205) 295-3114 - Main Building
(205) 295-3115 - Water Lab
Web Address: www.percengineering.com

June 18, 2015

Mr. Stephen Miles, P.E.
Alabama Surface Mining Commission
Post Office Box 2390
Jasper, Alabama 35502-2390

RE: Ridgeholm Energy Partners LLC
John Poe Mine
P-3981

Dear Stephen:

I hereby certify the attached detailed design plans for Temporary Spoil Fill No. 1 for the above referenced mine are in accordance with current prudent engineering practices and the Regulations of the Alabama Surface Mining Commission as adopted by Act 81-435 of December 18, 1981 and amended to date, and are true and correct to the best of my knowledge and belief.

If you have any questions or required additional information, please feel free to call.

Sincerely,
PERC Engineering Co., Inc.

Leslie G. Stephens, P.E. & P.L.S.
AL. REG. NO. 14117-E

ALABAMA
PROFESSIONAL ENGINEER
REGISTERED
No. 14117
LESLIE G. STEPHENS

INTRODUCTION

The purpose of this study was to fulfill the Alabama Surface Mining Commission's requirements for the design and plan approval of the proposed temporary spoil fill of approximately 230,000 cubic yards. This temporary spoil fill will be mined through and eliminated as mining progresses to the West in Increment No. 2 beginning at Basin 004P Phase II. Approximately 80,000 cubic yards of the temporary spoil material will be placed back in the Basin 004P Phase II area once the coal is removed and construction of the normal pool area has begun.

SITE LOCATION

Temporary Spoil Fill No. 1 is found in Dekalb County, Alabama approximately one (1) mile East of the High Point Community. The fill is found in the SE1/4 of NE1/4 of Section 29, Township 5 South, Range 9 East, Dekalb County, Alabama, as found on the Dugout Valley Quadrangle. The fill site will be located on land under control by Ridgeholm Energy Partners LLC

SITE GEOLOGY

The fill sites are underlain by rocks of the Pottsville Formation of the Pennsylvania age. These strata consist primarily of alternating sandstones, shaley sandstones, shales, sandy shales, coal seams, and underclays. The strike of strata within the permit area is complex due to local faulting between Increment No.1 and Increment No. 2, however, the strike ranges from approximately North 5° West and in general the strata dips to the Northeast at 82° in the vicinity of the fill area contained in Increment No. 2. The area is in the Appalachian Plateau physiographic province, and seismic zone 2. Faults were not found to exist at the proposed fill sites.

UNDERGROUND MINE LOCATIONS

There are no known underground mine workings at this site.

INVESTIGATIVE FINDINGS

Two (2) borings were made near the proposed fill sites. The boring locations are shown on the attached plan view drawings. Results from the borings show a sandstone foundation overlain by a clay, unconsolidated sand and weathered sandstone materials. The fill will consist of spoil material produced by the excavation of the Pool Area for Basin 004P Phase II down to the Upper Cliff coal seam. Our findings suggest that the design slopes as shown in the accompanying set of plans are stable with a factor of safety equal to those recommended in the Design Guidelines prepared by the regulatory authority.

LABORATORY TESTING AND SAMPLING

Field operations performed by PERC Engineering Co., Inc. was conducted by ASTM standard specifications where applicable, and procedures adopted for the specific appraisal of conditions existing at proposed fill sites.

BORING METHOD

Two (2) borings were performed at the proposed fill sites. Boring JPDH4 was a continuous core drill rig that collected a 3" diameter core sample that was inspected by PERC Engineering Co., Inc. personnel to determine depths and type of foundation material at the fill site. Boring X-6 was a rotary air rig that drilling a 6.25 Inch hole by rotating the rock bit at a high speed of rotation and circulating air down thru the center of the drill steel through the bit and back to the surface forcing the drill bit cuttings to the surface for sample collection and identification. Samples obtained by this method were inspected during the boring operation.

BORING RESULTS

Resulting values and analysis of the borings indicate a sandstone foundation overlain by a clay, unconsolidated sand and weathered sandstone materials. These resulting investigations show the material to be of a sound and excellent nature.

LABORATORY TESTING

Laboratory testing was conducted by Perc Engineering Co., Inc., Jasper, Alabama. The clay material overlying the sandstone foundation was taken from the proposed fill site. The sample underwent laboratory

classification analysis. The foundation material for Fill No. 1 is described as a to be a clay material, classified as an "SC" material. From the United States Department of Interior Bureau of Reclamation Design of Small Dams, page 137, an effective cohesion of 100 pounds per square foot, a density of 133.5 pounds per cubic foot, and an angle of internal friction of 27.9 degrees was obtained for the "SC" material.

The material selected to represent the fill material is mine overburden with an effective cohesion of 0 pounds per square foot, a density of 135 pounds per cubic foot, and an angle of internal friction of 35 degrees as recommended by the Alabama Surface Mining Commission.

Ridgeholm Energy Partners LLC contracted with EarthCon to drill the Exploration Hole X-6with air rotary drill utilizing a 6 and 1/4 inch drill bit . Samples were collected from drill cuttings by personnel of EarthCon. Collected samples were cataloged and stored in plastic reclosable bags for later inspection and testing. Ridgeholm Energy partners also contracted with Chambers Excavating and Mining to core drill hole JPDH4 These samples were transported to the PERC Engineering Co., Inc.'s Laboratory. Collected samples from boring JPDH4 were utilized for geochemical analysis, including paste pH, and neutralization potential by the PERC Engineering Laboratory and conducted according to ASTM guidelines. Collected samples were sent to and analyzed at Energy Technical Services, LLC in Northport, Alabama for sulfur content. In an attempt to more accurately describe the acid-base potential of the overburden at the John Poe site, a spreadsheet which was developed at the Pennsylvania Dept. of Environmental Resources, Bureau of Mining and Reclamation was employed. This spreadsheet not only takes into account the volume occupied by each interval tested, but also the amount of coal lost into the spoil. The results of this method from overburden geochemical analysis site REPJPDH4 (as shown in the attached Volumetric Overburden Calculation Sheets) are favorable: overburden at the John Poe Mine Increment No. 2 contains an average of +3.355 (tons $CaCO_3$/1000 tons material) excess neutralization potential.

SOIL PARAMETERS

The soil and foundation parameters selected for the design are shown below. These values used are the results of laboratory testing by Perc Engineering Co., Inc., Jasper, Alabama.

MATERIAL	LOCATION	UNIT WEIGHT (WET) PCF	EFFECTIVE ANGLE OF FRICTION	EFFECTIVE COHESION PSF
Spoil	Fill	135	35.0 degrees	0
Clay	Foundation Fill No. 1	133.5	27.9 degrees	100.8
Bedrock	Foundation	175	40 degrees	2000

STABILITY ANALYSIS

The proposed fill was evaluated under static loading conditions. A pore pressure ratio of 0.1 was used in the stability analyses. The stability analyses were performed using an approximate form of the limiting equilibrium approach as developed by Bishop. The location of the failure surface yielding the minimum safety factor was determined by allowing the computer to use a grid and search routine. The computer program used was the Reame Slope Stability program by Dr. Yang H. Huang, P.E. of the University of Kentucky. Results of the stability analyses show that Temporary Spoil Fill No. 1 can be built safely. Tabular results of the analyses are as follows:

SECTION	STATIC SAFETY FACTOR
A-A' East End	1.749
A-A' West End	1.751
B-B' South End	1.749
B-B' South End	1.752

All calculations performed using simplified Bishop Method of Analysis.

SITE HYDROLOGY

Site inspections were performed at the fill sites to determine the existence of seeps or springs. No evidence of seeps or springs was observed. All drainage from the area ultimately flows into the Unnamed Tributary of Biddle Springs Branch.

DIVERSIONS

Diversions will be used to route the run-off from the Temporary Spoil Fill No. 1 area and the Increment No. 2 Mining area to Basin 004P Phase I and Phase II.

UNDERDRAINS

This is a temporary disposal site for mine spoil. It will be eliminated as mining progresses. Due to the nonexistence of seeps and springs at the fill sites and due to the material to be disposed of within the fills consisting of large cobble type material, underdrains are not proposed. Due to its nature, the spoil material will function as an underdrain system itself.

CONSTRUCTION

Construction of Temporary Spoil Fills No. 1 will occur in four phases. These four phases are listed below:

Phase I - Site Preparation

- Step A - Removal of Vegetation
- Step B - Removal and Segregation of Soil Material

Phase II - Construction

- Step A - Placing and Compacting of Fill Material
- Step B - Construction of Diversion Ditches

Phase III - Revegetation

- Step A - Revegetation

Phase IV - Removal

- Step A - Removal

The fill will be inspected by a qualified registered professional engineer or other qualified professional specialist under the direct supervision of the professional engineer. Inspections will be made at least quarterly and during the times of removal of topsoil, vegetative, and organic materials, placement and compaction of spoil material, and revegetation of the areas. Certified inspection reports will be filed with the Regulatory Authority on a quarterly basis until the final configuration of the fill is reached stating that proper construction and maintenance are occurring in accordance with approved design plans. Inspection reports will be retained at the facility office.

PHASE I

Preparation of the site will consist of the removal of all vegetation and the grubbing of the fill area. Topsoil and subsoil from the site will be stockpiled, if required, in order to be replaced on the finished slopes of the proposed fill, if required.

PHASE II

The material to be placed in the temporary disposal fill will consist of spoil material produced from the excavation of Basin 004P Phase II down to the elevation of the Upper Cliff coal seam. The fill material will be approximately 230,000 cubic yards. It will be placed and spread over the entire fill area in horizontal lifts not to exceed four (4) feet in thickness and compacted to 90% of the standard proctor density. Compaction will be accomplished using mobile equipment. Once the Upper Cliff coal seam is removed from Basin 004P Phase II area approximately 80,000 cubic yards of the spoil material will be placed back into the open pit from the spoil fill area to help construct the normal pool area of 004P Phase II.

PHASE III

Revegetation of all outslopes shall be performed according to the mixtures and application rates given in the following Permanent Cover-Mixtures and Rates Attachment. Seeding will commence during the first normal planting season to establish a diverse, effective and permanent vegetative cover. Seed bed preparation shall include discing or scarifying the soil to permit seed application and to aid in the mixing of the soil amendments. All areas shall be mulched with hay at a rate of 1 ½ - 3 tons per acre to control erosion, to promote seed germination, and to increase the moisture retention of the soil.

PHASE IV

Phase IV will consist of mining through the temporary spoil disposal fill as the mining progresses. The fill will be utilized to achieve approximate original contours for the mine reclamation. Grading will

be performed from the top down and the grading slope will be 2.5' Horizontal To 1' Vertical or flatter during the entire grading process.

SPECIFICATIONS FOR TEMPORARY DISPOSAL OF SPOIL

Spoil material taken from the construction of Basin 004P Phase I and Phase II and John Poe Mine Increment No. 2 initial pits and any subsequent pits that are necessary to ensure the safe and efficient operation for Increment No. 2 will be stored within Temporary Spoil Disposal Area No.1 The disposal area plans shall be designed and certified by a qualified registered professional engineer and subsequently submitted to the Regulatory Authority for approval.

Due to the spoil material being placed within the fills being large cobble sized stones and the disposal areas being free of springs, groundwater seeps, and natural drainage courses, no underdrain systems are required.

All topsoil, vegetative and organic material will be removed from the disposal area prior to the transportation of any fill material. The topsoil will be stored onsite in stockpiles, to be redistributed over the disposal area prior to revegetation.

Spoil material taken from the initial cuts will be transported to the disposal area via mobile equipment in a controlled and safe manner. The spoil material will be spread in horizontal lifts not to exceed four (4) feet thick and compacted to 90% of the standard proctor as outlined in the ASTM, as to ensure stability of the area. No combustible material will be allowed to be stored in the disposal area. With the acid-base count of the material at this mine site, no acid or toxic forming material is expected. However, should any such material be encountered, it will be placed as near the center of the fill as possible and encapsulated with three feet of compacted clay.

Analysis of the foundation and fill materials will be performed by a qualified laboratory and the results will be utilized in the stability analysis in the detailed Temporary spoil disposal plans. The slopes of the fill area will be designed to have a 1.5 minimum static safety factor.

The fill will be inspected by a qualified registered professional engineer or other qualified professional specialist under the direct supervision of the professional engineer. Inspections will be made at least quarterly and during the times of removal of topsoil, vegetative, and organic materials, installation of diversion ditches, placement and compaction of spoil material, and revegetation of the areas. Certified inspection reports will be filed with the Regulatory Authority on a quarterly basis until the final configuration of the fill is reached stating that proper construction and maintenance are occurring in accordance with approved design plans. Inspection reports will be retained at the facility office.

The final configuration of the disposal area will be graded in such a manner as to be consistent with the surrounding area and revegetated in such a manner as to be consistent with the landuse of the surrounding area.

Slope protection will be achieved through the use of seed and mulch. The disposal area will be revegetated as entailed in the reclamation plan.

Routine maintenance of the disposal area will consist of repair and stabilization of any rills and gullies which may develop upon the final configuration, repairs to erosion protection structures as required, repairs to diversion structures as necessary and the maintenance of vegetation as necessary to ensure the establishment of a permanent diverse vegetative cover.

PERMANENT COVER-MIXTURES AND RATES

Spring Planting

Species	Planting Rate	Planting Methods	Planting Dates	Areas to be Planted
Fescue	25#/acre	Broadcast	Spring	All Disturbance
Millet	10#/acre	Broadcast	Spring	All Disturbance
Sericea	35#/acre	Broadcast	Spring	All Disturbance
Bermuda	15#/acre	Broadcast	Spring	All Disturbance

Fall Planting

Species	Planting Rate	Planting Methods	Planting Dates	Areas to be Planted
Sericea	35#/Acre	Broadcast	Fall	All Disturbance
Fescue	40#/Acre	Broadcast	Fall	All Disturbance
Perennial Ryegrass	20#/Acre	Broadcast	Fall	All Disturbance

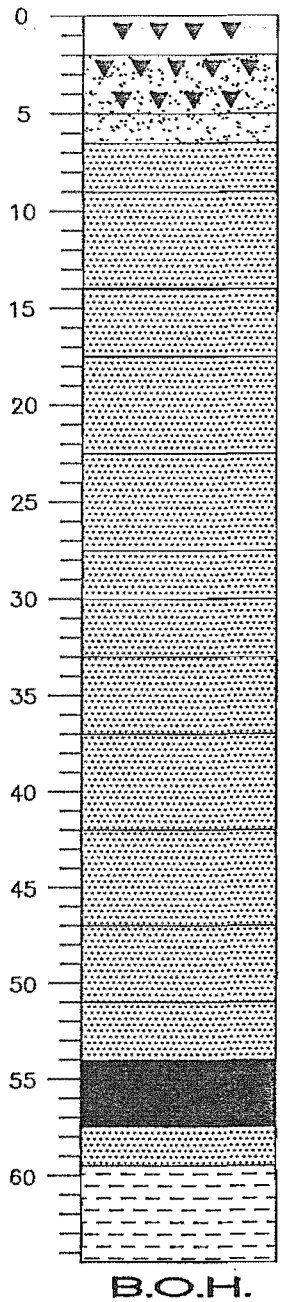

INTERVAL:	DESCRIPTION:
0 – 2'	Surface Material, unconsolidated, clayey, medium brown
2 – 5'	Surface Material, unconsolidated, clayey, sandy and medium yellow–brown
5 – 6.5'	unconsolidated sand, soft, light yellow–brown
6.5 – 9'	weathered sandstone, medium to fine grained, soft, white to medium orange, some pink, some coal streaks
9 – 14'	Sandstone, fine to medium grained, some weathered bands, medium hard, light to medium gray, some medium brown, some coal streaks
14 – 17.5'	Sandstone, fine to medium grained, medium hard, light to medium gray, some coal streaks
17.5 – 22.5'	Sandstone, fine to medium grained, medium hard, light to medium gray, some coal streaks
22.5 – 27.5'	Sandstone, fine to medium grained, medium hard, light to medium gray, some coal streaks
27.5 – 30'	Sandstone, fine to medium grained, medium hard, light to medium gray, some coal streaks
30 – 33'	Sandstone, fine to medium grained, some weathered bands, medium hard, light to medium gray, some medium brown, some coal streaks
33 – 37'	Sandstone, fine to medium grained, medium hard, light to medium gray, some coal streaks
37 – 42'	Sandstone, fine to medium grained, medium hard, light to medium gray, some coal streaks
42 – 47'	Sandstone, fine to medium grained, medium hard, light to medium gray, some coal streaks
47 – 51'	Sandstone, fine to medium grained, medium to very hard, light to medium gray, some coal streaks
51 – 54'	Sandstone, fine to medium grained, medium to very hard, light to medium gray, many coal streaks
54 – 57.5'	Coal, Upper Cliff Seam (42")
57.5 – 59.5'	Sandstone, fine to medium grained, medium to very hard, light to medium gray, many coal streaks
59.5 – 64.5'	Shale, sandy, medium hard, medium to dark grey, some clay, some coal streaks

SURFACE ELEVATION=1,360.00 FT' MSL

B.O.H. – BOTTOM OF HOLE

PERC ENGINEERING CO., INC.
1906 Highway 78 West Jasper, Alabama 35501
P.O. Box 1712 Jasper, Alabama 35502
(205) 384-3533 Office (205) 384-9981 Fax

RIDGEHOLM ENERGY PARTNERS, LLC
JOHN POE MINE
LITHOLOGIC DESCRIPTION FOR GEOCHEMICAL ANALYSIS SITE REPJPDH4

DRAWN BY: S.W.L. DWG. NAME: REPJPMLITH	DATE: 02–09–15
APPROVED BY: TST	SCALE: 1" = 10' vertical

J:\Mining\Ridgeholm Energy Partners\John Poe Mine P-3981\REPJPMLITH.dwg 02/16/15 10:18

BORING NUMBER X-6

FACILITY NAME Ridgeholm Energy, Dekalb County, Alabama LOCATION Dekalb County, Alabama

TOTAL DEPTH (ft) 177.0 ft. BOREHOLE DIA. (in) 6.25

CASING DIA. (in) _____ TYPE _____ SCREEN LENGTH (ft) _____ SLOT SIZE (in) _____

DRILLING CO. _____ DRILLING METHOD _____

GEOLOGIST T. Ahern DATE DRILLED _____

TOP OF CASING ELEV. (ft MSL) _____ GROUND SURFACE ELEV. (ft MSL) 1357.00

LONGITUDE 85°42'43.15"W LATITUDE 34°34'22.15"N

LOCATION MAP

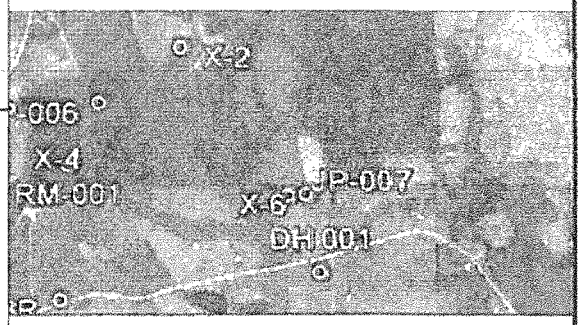

Clay Sandstone Sand Shale Coal

DEPTH (feet)	TYPE	% RECOVERY	LITHOLOGIC LOG	SOIL CLASSIFI-CATION	LITHOLOGIC DESCRIPTION/ COMMENTS
0					SAND - no sampling
					SANDSTONE - yellow, slightly weathered
5					
10					11-76' SANDSTONE - white, hard
15					
20					
25					
30					
35					
40					
45					

DEPTH (feet)	TYPE	% RECOVERY	LITHOLOGIC LOG	SOIL CLASSIFI-CATION	LITHOLOGIC DESCRIPTION/ COMMENTS	DEPTH (feet)
45					SANDSTONE - white, hard continued	45
50						50
55						55
60						60
65						65
70						70
75						75
					COAL - 36" seam	
80					79-126' Unknown - to much water filling hole to collect samples	80
85						85
90				WL	90' water first encountered	90
95						95
100						100

BORING # X-6

FACILITY NAME Ridgeholm

COMMENTS

EARTHCON

Environmental Challenges
BUSINESS SOLUTIONS

DEPTH (feet)	TYPE	% RECOVERY	LITHOLOGIC LOG	SOIL CLASSIFI-CATION	LITHOLOGIC DESCRIPTION/ COMMENTS	DEPTH (feet)
100					79-126' Unknown - to much water filling hole to collect samples, continued	100
105						105
110						110
115						115
120						120
125						125
					COAL - 8" seam	
					SHALE - gray, weathered	
130						130
135						135
					COAL - 12" seam	
					SHALE - weathered to hard	
140						140
145						145
150						150
155						155

BORING # X-6

FACILITY NAME Ridgeholm

COMMENTS

EARTHCON

Environmental Challenges
BUSINESS SOLUTIONS

DEPTH (feet)	TYPE	% RECOVERY	LITHOLOGIC LOG	SOIL CLASSIFI-CATION	LITHOLOGIC DESCRIPTION/ COMMENTS	DEPTH (feet)
155					SHALE - weathered to hard continued	155
160						160
165						165
					COAL - 18" seam	
					SHALE - weathered to hard	
170						170
					COAL - 10" seam	
175					SHALE - weathered to hard	175
					Termination of Boring.	
180						180
185						185
190						190
195						195
200						200
205						205
210						210

BORING # X-6

FACILITY NAME Ridgeholm

COMMENTS

EARTHCON

Environmental Challenges
BUSINESS SOLUTIONS

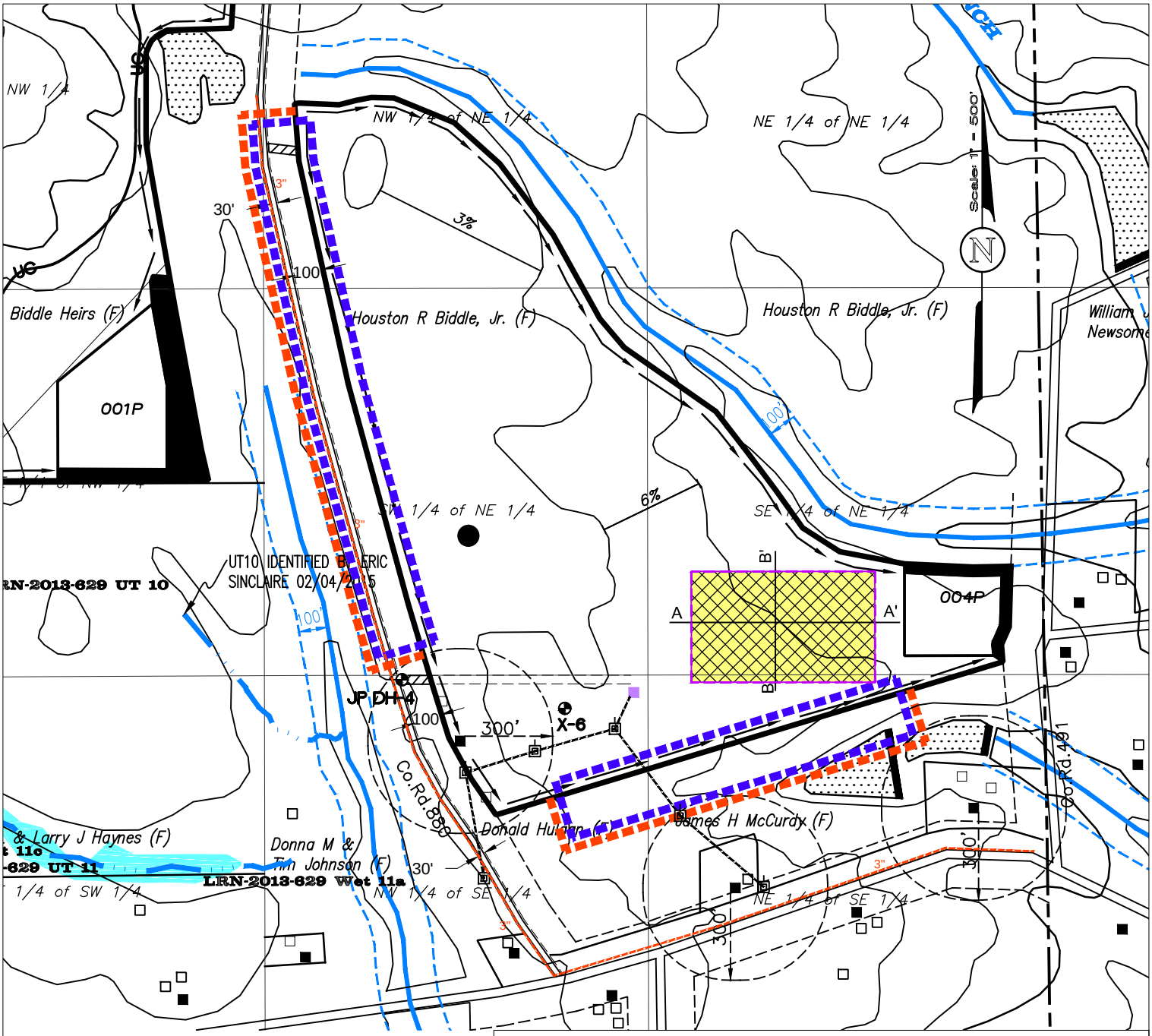

MAP LEGEND:

- PERMIT BOUNDARY
- TEMPORARY SPOIL FILL NO. 1
- Auger Mining Extents
- 30 Degree Angle of Draw
- Foundation Investigation Site

V:\Mining\Ridgeholm Energy Partners\John Poe Mine P-3981\REPJPM.dwg 11/18/15 12:09

PERC ENGINEERING CO., INC.
1606 Hwy. 78 West Jasper, AL 35501/P.O. Box 1712-35502
(205) 384-5553 Office (205) 295-3114 Fax

RIDGEHOLM ENERGY PARTNERS, LLC.
JOHN POE MINE / P-3981
TEMPORARY SPOIL FILL NO. 1
SITE LOCATION MAP

.DWG NAME:	REPJPM	DATE:	06-24-2015
DRAWN BY:	S.A.E.	SCALE:	1"=500'
APPROVED BY:	L.G.S.	JOB NUMBER:	15-04482-002

SW 1/4 of NE 1/4

SE 1/4 of NE 1/4

6%

UT10 IDENTIFIED BY ERIC SINCLAIRE 02/04/2015

3"

JP DH-4

X-6

100

300'

Co. Rd. 880

Co. Rd. 491

Donald Hulgan (F)

James H McCurdy (F)

A

A'

B

B'

EL 1378.1

EL 1382.3

-1.0%

004P

100' Minimum from open highwall.

06/24/15 TS-4

LEGEND

680	EXISTING CONTOUR
680	POST FILL CONTOUR
A — A'	CROSS-SECTION
	FOUNDATION INVESTIGATION SITE
	PERMIT BOUNDARY
	COAL STOCKPILE, LOCATION SUBJECT TO CHANGE
3"	WATERLINES ALONG COUNTY ROAD AND SIZE
	DIVERSION DITCH
	IMPOUNDED WATER
	OCCUPIED DWELLING
	OUT BULIDING (BARN, GARAGE, ETC.)
10%	SLOPE MEASUREMENTS

Scale: 1" = 200'

N

PERC ENGINEERING CO., INC.

1606 Hwy 78 West Jasper, AL 35501/P.O. Box 1712-35502

(205) 384-5553 Office (205) 295-3114 Fax

RIDGEHOLM ENERGY PARTNERS, LLC.
JOHN POE MINE / P-3981
TEMPORARY SPOIL FILL NO. 1
PLANVIEW

.DWG NAME:	REPJPM	DATE:	06-24-2015
DRAWN BY:	S.A.E.	SCALE:	1"=200'
APPROVED BY:	L.G.S.	JOB NUMBER:	15-04482-002

\\Perc600\perc_eng\Mining\Ridgeholm Energy Partners\John Poe Mine P-3981\TEMP SPOIL FILL NO 1.dwg

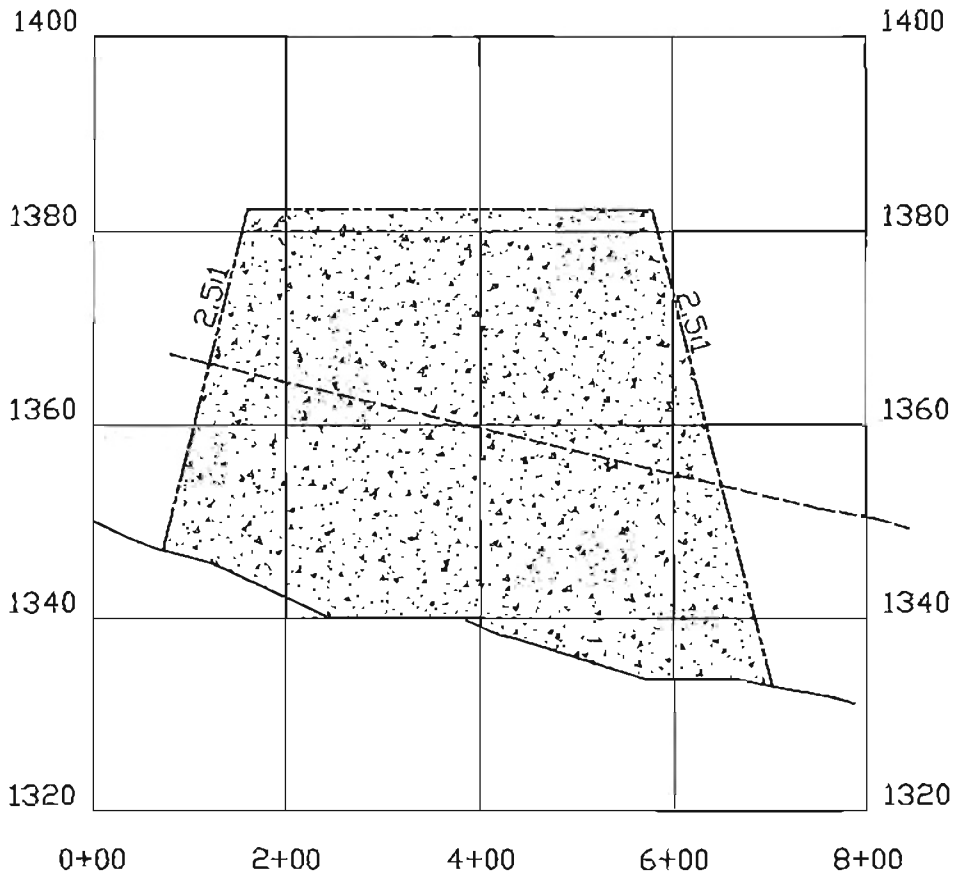

SCALE: 1" = 200' HORIZONTAL
1" = 20' VERTICAL

LEGEND

- EXISITNG GRADE
- PROPOSED MINING GRADE
- PROPOSED FINISHED GRADE
- TEMPORARY SPOIL FILL NO.

V:\Mining\Ridgeholm Energy Partners\John Poe Mine P-3981\TEMP SPOIL FILL NO1.dwg 06/18/15 16:37

PERC ENGINEERING CO., INC.
1606 Hwy. 78 West Jasper, AL 35501/P.O. Box 1712-35502
(205) 384-5553 Office (205) 295-3114 Fax

RIDGEHOLM ENERGY PARTNERS, LLC.
JOHN POE MINE / P-3981
TEMPORARY SPOIL FILL NO. 1
PROFILE A - A'

.DWG NAME:	REPJPM	DATE:	06-18-2015
DRAWN BY:	S.A.E.	SCALE:	AS SHOWN
APPROVED BY:	L.G.S.	JOB NUMBER:	15-04482-002

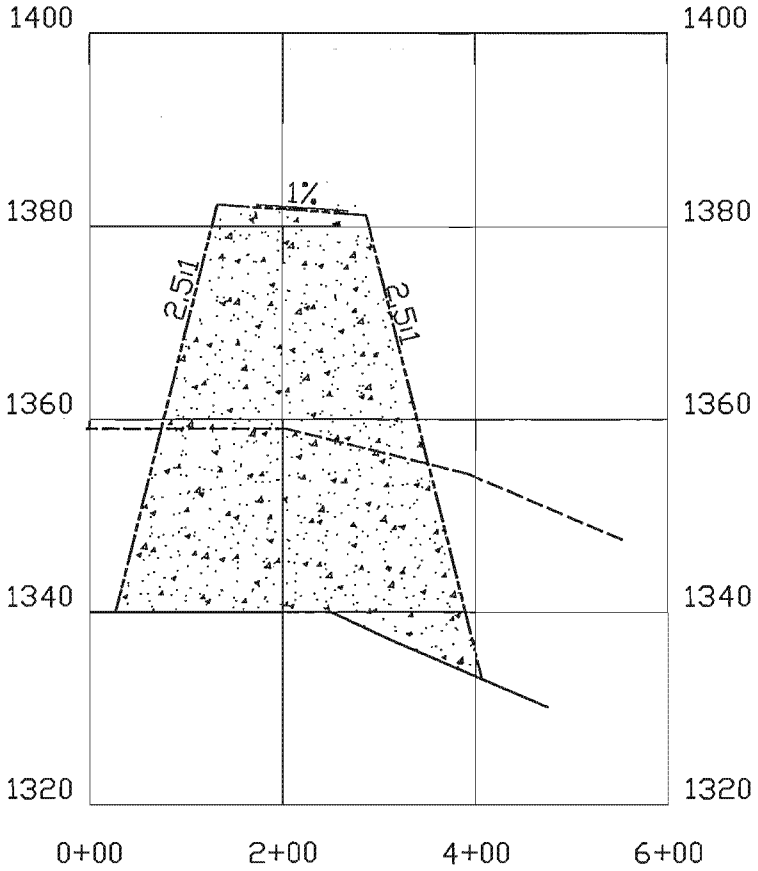

SCALE: 1" = 200' HORIZONTAL
1" = 20' VERTICAL

LEGEND

- EXISITNG GRADE
- PROPOSED MINING GRADE
- PROPOSED FINISHED GRADE
- TEMPORARY SPOIL FILL NO.

V:\Mining\Ridgeholm Energy Partners\John Poe Mine P-3981\TEMP SPOIL FILL NO1.dwg 06/18/15 16:37

PERC
ENGINEERING CO., INC.
1606 Hwy. 78 West Jasper, AL 35501/P.O. Box 1712-35502
(205) 384-5553 Office (205) 295-3114 Fax

RIDGEHOLM ENERGY PARTNERS, LLC.
JOHN POE MINE / P-3981
TEMPORARY SPOIL FILL NO. 1
PROFILE B - B'

.DWG NAME:	REPJPM	DATE:	06-18-2015
DRAWN BY:	S.A.E.	SCALE:	AS SHOWN
APPROVED BY:	L.G.S.	JOB NUMBER:	15-04482-002

Ridgeholm Energy Partners X Section A-A' East End

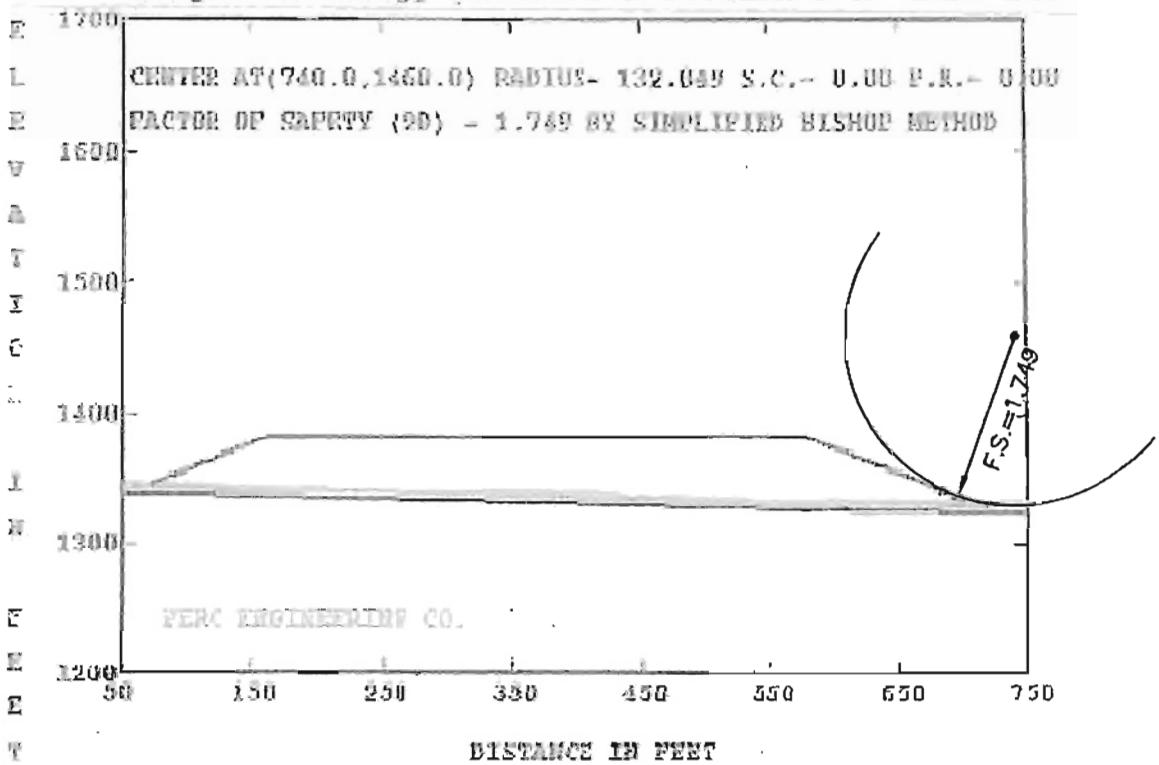

REAME (ROTATIONAL EQUILIBRIUM ANALYSIS OF MULTILAYERED EARTHWORKS)
THIS 2004 VERSION IS LICENSED BY CIVIL ENGINEERING SOFTWARE CENTER TO

PERC ENGINEERING CO., INC.

INPUT FILE NAME -C:\REAME2004\A-A' EAST END.DAT

TITLE -Ridgeholm Energy Partners X Section A-A' East End

NO. OF STATIC AND SEISMIC CASES (NCASE) = 1

NO. OF NONCIRCULAR SLIP SURFACES (NSS) = 0

TWO-DIMENSIONAL ANALYSIS (THREED = 0)

CASE NO. 1 SEISMIC COEFFICIENT (SEIC) =0.000

NO. OF BOUNDARY LINES (NBL) = 4

NO. OF POINTS ON BOUNDARY LINE 1 = 2
1 X COORD.= 0 Y COORD.= 1341.09
2 X COORD.= 786.37 Y COORD.= 1322.13

NO. OF POINTS ON BOUNDARY LINE 2 = 2
1 X COORD.= 0 Y COORD.= 1346.09
2 X COORD.= 786.37 Y COORD.= 1327.13

NO. OF POINTS ON BOUNDARY LINE 3 = 16
1 X COORD.= 0 Y COORD.= 1350.09
2 X COORD.= 38.4 Y COORD.= 1348.27
3 X COORD.= 64 Y COORD.= 1347.26
4 X COORD.= 121.6 Y COORD.= 1345.77
5 X COORD.= 124.8 Y COORD.= 1345.67
6 X COORD.= 246.4 Y COORD.= 1340.03
7 X COORD.= 248 Y COORD.= 1340
8 X COORD.= 379.2 Y COORD.= 1339.99
9 X COORD.= 380.8 Y COORD.= 1339.95
10 X COORD.= 422.4 Y COORD.= 1338.2
11 X COORD.= 435.2 Y COORD.= 1337.97
12 X COORD.= 572.8 Y COORD.= 1333.66
13 X COORD.= 664 Y COORD.= 1333.7
14 X COORD.= 715.2 Y COORD.= 1332.69
15 X COORD.= 766.4 Y COORD.= 1331.75
16 X COORD.= 786.37 Y COORD.= 1331.13

NO. OF POINTS ON BOUNDARY LINE 4 = 8
1 X COORD.= 72.8 Y COORD.= 1347.23
2 X COORD.= 159.2 Y COORD.= 1381.81

```
 3  X COORD.= 160          Y COORD.= 1382.09
 4  X COORD.= 160.8        Y COORD.= 1382.27
 5  X COORD.= 578.4        Y COORD.= 1382.27
 6  X COORD.= 579.2        Y COORD.= 1382.17
 7  X COORD.= 580          Y COORD.= 1381.95
 8  X COORD.= 701.6        Y COORD.= 1333.24

LINE NO. AND SLOPE OF EACH SEGMENT ARE:
 1      -0.024
 2      -0.024
 3      -0.047      -0.039      -0.026      -0.031      -0.046      -0.019
         0.000      -0.025      -0.042      -0.018      -0.031       0.000
        -0.020      -0.018      -0.031
 4       0.400       0.350       0.225       0.000      -0.125      -0.275
        -0.401

MIN. DEPTH OF TALLEST SLICE (DMIN) = 0
NO. OF RADIUS CONTROL ZONES (NRCZ) = 1

RADIUS DECREMENT (RDEC) FOR ZONE 1 = 0
NO. OF CIRCLES (NCIR) FOR ZONE 1 = 5
ID NO. FOR FIRST CIRCLE (INFC) FOR ZONE 1 = 1
NO. OF BOTTOM LINES (NOL) FOR ZONE 1 = 1
LINE NO. (LINO)  BEG. NO. (NBP)  END NO. (NEP)
      1                1               2

UNIT WEIGHT OF WATER (GW) = 62.4

SOIL NO.       COHESION       FRIC. ANGLE    UNIT WEIGHT
 1              2000           40             175
 2              100.8          27.9           133.5
 3              0              35             135

NO SEEPAGE
USE GRID
NO. OF SLICES (NSLI) = 10
NO. OF ADD. CIRCLES (NAC) = 3
ANALYSIS BY SIMPLIFIED BISHOP METHOD (MTHD=2)
NUMBER OF FORCES (NFO)= 0
SOFT SOIL NUMBER (SSN)= 0
INPUT COORD. OF GRID POINTS 1,2,AND 3

POINT 1 X COORD. = 640    Y COORD. = 1480
POINT 2 X COORD. = 640    Y COORD. = 1380
POINT 3 X COORD. = 720    Y COORD. = 1380

X INCREMENT (XINC) = 8      Y INCREMENT (YINC) = 8
NO. OF DIVISIONS BETWEEN POINTS 1 AND 2 (ND12) = 5
NO. OF DIVISIONS BETWEEN POINTS 2 AND 3 (ND23) = 4
ONLY A SUMMARY TABLE IS PRINTED (NPRT = 0)
```

SLICES WILL BE SUBDIVIDED

AUTOMATIC SEARCH WILL FOLLOW AFTER GRID

FACTORS OF SAFETY BASED ON GRID

IN THE FOLLOWING TABLE WARNING INDICATES HOW MANY TIMES THE MAXIMUM RADIUS IS LIMITED BY THE END POINTS OF GROUND LINES

CENTER X COORDINATE	CENTER Y COORDINATE	NO. OF CIRCLE TOTAL	CRITIC.	RADIUS	LOWEST F.S.	WARNING
640	1480	8	8	115.379	1.782	0
640	1460	8	8	96.741	1.781	0
640	1440	8	8	78.104	1.788	0
640	1420	8	8	59.467	1.799	0
640	1400	8	8	40.829	1.819	0
640	1380	8	8	22.192	1.877	0
660	1480	8	8	122.356	1.769	1
660	1460	8	8	103.762	1.772	1
660	1440	14	14	85.183	1.778	1
660	1420	14	14	66.556	1.785	0
660	1400	14	14	47.919	1.796	0
660	1380	14	14	29.281	1.824	0
680	1480	8	8	129.211	1.761	1
680	1460	8	8	110.586	1.762	1
680	1440	8	8	91.965	1.764	1
680	1420	8	8	73.352	1.767	1
680	1400	8	8	54.752	1.772	1
680	1380	14	14	36.182	1.784	1
700	1480	8	8	136.198	1.755	1
700	1460	8	8	117.560	1.755	1
700	1440	8	8	98.923	1.755	1
700	1420	8	8	80.285	1.755	1
700	1400	8	8	61.648	1.755	1
700	1380	8	8	43.011	1.755	1
720	1480	8	8	143.320	1.751	1
720	1460	8	8	124.691	1.750	1
720	1440	8	8	106.066	1.750	1
720	1420	7	7	87.512	1.750	1
720	1400	7	7	68.923	1.751	1
720	1380	1	1	50.250	1000.000	1

GRID IS EXPANDED AS FOLLOWS SO MINIMUM FACTOR OF SAFETY FALLS WITHIN THE GRID

740	1480	7	7	150.634	1.749	1
740	1460	5	5	132.049	1.749	1
740	1440	1	1	113.456	1000.000	1
740	1420	1	1	94.878	1000.000	1
740	1400	1	0	76.730	1000.000	0
740	1380	1	0	56.735	1000.000	0

760	1480	1	0	157.189	1000.000	0
760	1460	1	0	137.194	1000.000	0
760	1440	1	0	117.200	1000.000	0
760	1420	1	0	97.206	1000.000	0
760	1400	1	0	77.212	1000.000	0
760	1380	1	0	57.218	1000.000	0

LOWEST FACTOR OF SAFETY AT EACH GRID POINT IS TABULATED BELOW

COORDINATE	640.000	660.000	680.000	700.000	720.000	740.000	760.000
1480.000	1.782	1.769	1.761	1.755	1.751	1.749	1000.000
1460.000	1.781	1.772	1.762	1.755	1.750	1.749	1000.000
1440.000	1.788	1.778	1.764	1.755	1.750	1000.000	1000.000
1420.000	1.799	1.785	1.767	1.755	1.750	1000.000	1000.000
1400.000	1.819	1.796	1.772	1.755	1.751	1000.000	1000.000
1380.000	1.877	1.824	1.784	1.755	1000.000	1000.000	1000.000

MINIMUM FACTORS OF SAFETY OCCUR AT THE FOLLOWING 2 CENTERS

FACTOR OF SAFETY = 1.749 AT (740.000,1460.000)
FACTOR OF SAFETY = 1.750 AT (720.000,1440.000)

AUTOMATIC SEARCH WILL BE MADE ONLY ON THE CENTER WITH THE SMALLEST F.S. MORE SEARCH FROM OTHER CENTER MAY BE NEEDED TO ENSURE THAT MINIMUM F.S. IS OBTAINED.

AT POINT (740 1460) RADIUS 132.049
THE MINIMUM FACTOR OF SAFETY IS 1.749

FACTORS OF SAFETY BASED ON SEARCH

IN THE FOLLOWING TABLE WARNING INDICATES HOW MANY TIMES THE MAXIMUM RADIUS IS LIMITED BY THE END POINTS OF GROUND LINES

CENTER X COORDINATE	CENTER Y COORDINATE	NO. OF CIRCLE TOTAL	CRITIC.	RADIUS	LOWEST F.S.	WARNING
740	1460	5	5	132.049	1.749	1
748	1460	1	1	134.985	1000.000	1
732	1460	7	7	129.113	1.750	1
740	1468	6	6	139.488	1.749	1
740	1452	5	5	124.625	1.749	1
742	1460	6	6	132.798	1.749	1
738	1460	6	6	131.307	1.749	1
740	1462	5	5	133.918	1.749	1
740	1458	7	7	130.204	1.749	1

AT POINT (740 1460) RADIUS 132.049

THE MINIMUM FACTOR OF SAFETY IS 1.749

SUMMARY OF SLICE INFORMATION FOR MOST CRITICAL SLIP SURFACE

SL. NO.	SOIL NO.	SLICE WIDTH	SLICE HEIGHT	WATER HEIGHT	BOTTOM SINE	TOTAL WEIGHT	EFFEC. WEIGHT	RESIS. MOMENT	DRIVING MOMENT
1	3	0.953	0.021	0.000	-.404	.267E+01	.267E+01	.226E+03	.142E+03
2	3	0.953	0.056	0.000	-.397	.714E+01	.714E+01	.606E+03	.374E+03
3	3	0.953	0.081	0.000	-.390	.105E+02	.105E+02	.892E+03	.539E+03
4	3	0.953	0.098	0.000	-.382	.126E+02	.126E+02	.108E+04	.638E+03
5	3	0.953	0.107	0.000	-.375	.137E+02	.137E+02	.118E+04	.680E+03
6	3	0.953	0.106	0.000	-.368	.137E+02	.137E+02	.118E+04	.664E+03
7	3	0.953	0.097	0.000	-.361	.125E+02	.125E+02	.108E+04	.597E+03
8	3	0.953	0.080	0.000	-.354	.103E+02	.103E+02	.891E+03	.481E+03
9	3	0.953	0.054	0.000	-.346	.699E+01	.699E+01	.606E+03	.319E+03
10	3	0.953	0.020	0.000	-.339	.261E+01	.261E+01	.227E+03	.117E+03
							SUM	.796E+04	.455E+04

AT CENTER (740.000 , 1460.000) WITH RADIUS 132.049 AND SEIS. COEFF. 0.00
FACTOR OF SAFETY BY NORMAL METHOD IS 1.749
FACTOR OF SAFETY BY SIMPLIFIED BISHOP METHOD IS 1.749

Ridgeholm Energy Partners LLC X Section A-A' West End

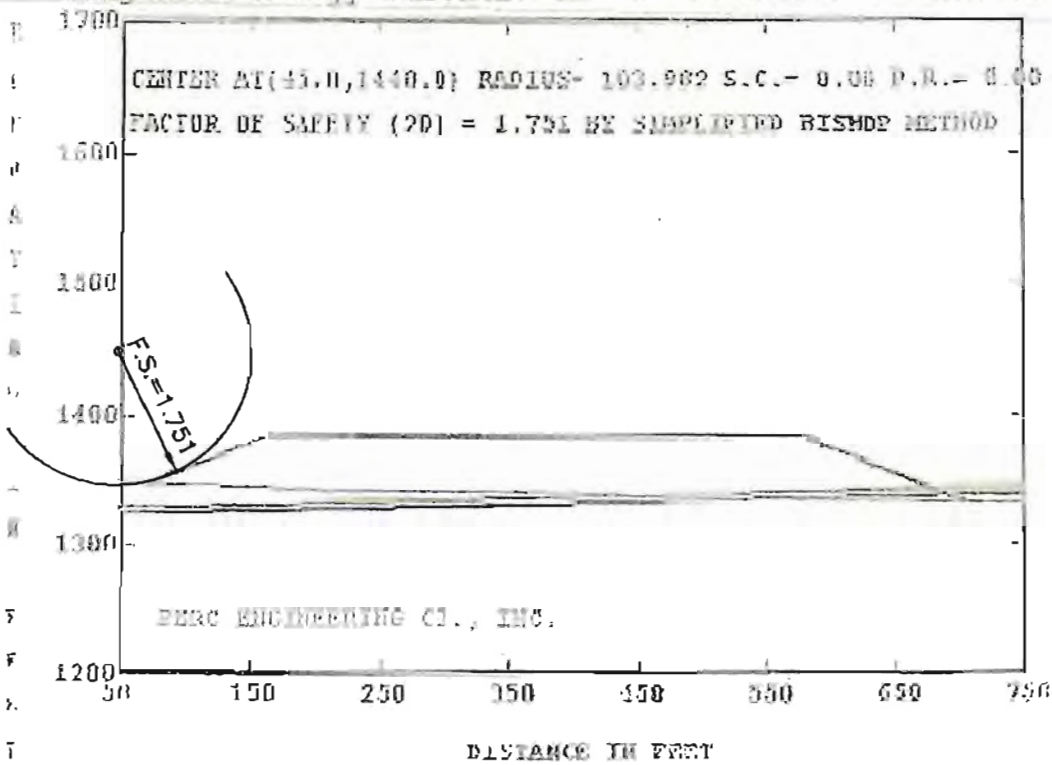

```
REAME (ROTATIONAL EQUILIBRIUM ANALYSIS OF MULTILAYERED EARTHWORKS)
THIS 2004 VERSION IS LICENSED BY CIVIL ENGINEERING SOFTWARE CENTER TO

                    PERC ENGINEERING CO., INC.

INPUT FILE NAME  -C:\REAME2004\A-A' WEST END.DAT

TITLE -Ridgeholm Energy Partners LLC X Section A-A' West End

NO. OF STATIC AND SEISMIC CASES (NCASE) = 1

NO. OF NONCIRCULAR SLIP SURFACES (NSS) = 0

TWO-DIMENSIONAL ANALYSIS ( THREED = 0 )


CASE NO.  1   SEISMIC COEFFICIENT (SEIC) =0.000

NO. OF BOUNDARY LINES (NBL) = 4

NO. OF POINTS ON BOUNDARY LINE 1 = 2
 1  X COORD.= 0              Y COORD.= 1322.13
 2  X COORD.= 786.37         Y COORD.= 1341.09

NO. OF POINTS ON BOUNDARY LINE 2 = 2
 1  X COORD.= 0              Y COORD.= 1327.13
 2  X COORD.= 786.37         Y COORD.= 1346.09

NO. OF POINTS ON BOUNDARY LINE 3 = 16
 1  X COORD.= 0              Y COORD.= 1350.09
 2  X COORD.= 38.4           Y COORD.= 1348.27
 3  X COORD.= 64             Y COORD.= 1347.26
 4  X COORD.= 121.6          Y COORD.= 1345.77
 5  X COORD.= 124.8          Y COORD.= 1345.67
 6  X COORD.= 246.4          Y COORD.= 1340.03
 7  X COORD.= 248            Y COORD.= 1340
 8  X COORD.= 379.2          Y COORD.= 1339.99
 9  X COORD.= 380.8          Y COORD.= 1339.95
 10 X COORD.= 422.4          Y COORD.= 1338.2
 11 X COORD.= 435.2          Y COORD.= 1337.97
 12 X COORD.= 572.8          Y COORD.= 1333.66
 13 X COORD.= 664            Y COORD.= 1333.7
 14 X COORD.= 715.2          Y COORD.= 1332.69
 15 X COORD.= 766.4          Y COORD.= 1331.75
 16 X COORD.= 786.37         Y COORD.= 1331.13

NO. OF POINTS ON BOUNDARY LINE 4 = 9
 1  X COORD.= 72.8           Y COORD.= 1347.23
 2  X COORD.= 159.2          Y COORD.= 1381.81
```

```
 3  X COORD.= 160          Y COORD.= 1382.09
 4  X COORD.= 160.8        Y COORD.= 1382.27
 5  X COORD.= 578.4        Y COORD.= 1382.27
 6  X COORD.= 579.2        Y COORD.= 1382.17
 7  X COORD.= 580          Y COORD.= 1381.95
 8  X COORD.= 701.6        Y COORD.= 1333.24
 9  X COORD.= 715.2        Y COORD.= 1332.69

LINE NO. AND SLOPE OF EACH SEGMENT ARE:
 1       0.024
 2       0.024
 3      -0.047      -0.039      -0.026      -0.031      -0.046      -0.019
         0.000      -0.025      -0.042      -0.018      -0.031       0.000
        -0.020      -0.018      -0.031
 4       0.400       0.350       0.225       0.000      -0.125      -0.275
        -0.401      -0.040

MIN. DEPTH OF TALLEST SLICE (DMIN) = 0
NO. OF RADIUS CONTROL ZONES (NRCZ) = 1

RADIUS DECREMENT (RDEC) FOR ZONE 1 = 0
NO. OF CIRCLES (NCIR) FOR ZONE 1 = 5
ID NO. FOR FIRST CIRCLE (INFC) FOR ZONE 1 = 1
NO. OF BOTTOM LINES (NOL) FOR ZONE 1 = 1
LINE NO. (LINO)  BEG. NO. (NBP)  END NO. (NEP)
      1                1               2

UNIT WEIGHT OF WATER (GW) = 62.4

SOIL NO.       COHESION       FRIC. ANGLE   UNIT WEIGHT
 1              2000           40            175
 2              100.8          27.9          133.5
 3              0              35            135

NO SEEPAGE
USE GRID
NO. OF SLICES (NSLI) = 10
NO. OF ADD. CIRCLES (NAC) = 3
ANALYSIS BY SIMPLIFIED BISHOP METHOD (MTHD=2)
NUMBER OF FORCES (NFO)= 0
SOFT SOIL NUMBER (SSN)= 0
INPUT COORD. OF GRID POINTS 1,2,AND 3

POINT 1 X COORD. = 60     Y COORD. = 1455
POINT 2 X COORD. = 60     Y COORD. = 1380
POINT 3 X COORD. = 120    Y COORD. = 1380

X INCREMENT (XINC) = 4      Y INCREMENT (YINC) = 4
NO. OF DIVISIONS BETWEEN POINTS 1 AND 2 (ND12) = 5
NO. OF DIVISIONS BETWEEN POINTS 2 AND 3 (ND23) = 4
```

ONLY A SUMMARY TABLE IS PRINTED (NPRT = 0)
SLICES WILL BE SUBDIVIDED

AUTOMATIC SEARCH WILL FOLLOW AFTER GRID

FACTORS OF SAFETY BASED ON GRID

IN THE FOLLOWING TABLE WARNING INDICATES HOW MANY TIMES THE MAXIMUM RADIUS IS LIMITED BY THE END POINTS OF GROUND LINES

CENTER X COORDINATE	CENTER Y COORDINATE	NO. OF CIRCLE TOTAL	CRITIC.	RADIUS	LOWEST F.S.	WARNING
60	1455	8	8	104.996	1.752	1
60	1440	8	8	91.022	1.752	1
60	1425	7	7	77.144	1.753	1
60	1410	7	7	63.135	1.752	1
60	1395	6	6	49.211	1.753	1
60	1380	1	1	35.181	1000.000	1
75	1455	8	8	99.664	1.756	1
75	1440	8	8	85.685	1.757	1
75	1425	8	8	71.705	1.757	1
75	1410	8	8	57.726	1.757	1
75	1395	8	8	43.747	1.757	1
75	1380	8	8	29.768	1.758	1
90	1455	8	8	94.436	1.763	1
90	1440	8	8	80.468	1.764	1
90	1425	8	8	66.503	1.766	1
90	1410	8	8	52.545	1.770	1
90	1395	8	8	38.599	1.777	1
90	1380	8	8	24.682	1.793	1
105	1455	8	8	89.309	1.772	1
105	1440	8	8	75.365	1.776	1
105	1425	8	8	61.434	1.781	1
105	1410	14	14	47.523	1.791	1
105	1395	14	14	33.646	1.811	1
105	1380	14	14	19.833	1.866	1
120	1455	8	8	84.272	1.850	1
120	1440	8	8	70.364	1.792	1
120	1425	14	14	56.479	1.802	1
120	1410	14	14	42.627	1.823	1
120	1395	8	8	28.829	1.867	1
120	1380	14	14	14.989	1.996	0

GRID IS EXPANDED AS FOLLOWS SO MINIMUM FACTOR OF SAFETY FALLS WITHIN THE GRID

45	1455	6	6	110.521	1.752	1
45	1440	7	7	96.555	1.751	1
45	1425	1	1	82.589	1000.000	1
45	1410	1	1	68.651	1000.000	1
45	1395	1	1	55.270	1000.000	1

45	1380	1	1	42.973	1000.000	1
30	1455	1	1	115.958	1000.000	1
30	1440	1	1	102.167	1000.000	1
30	1425	1	1	88.769	1000.000	1
30	1410	1	1	75.973	1000.000	1
30	1395	1	1	64.139	1000.000	1
30	1380	1	1	53.905	1000.000	1

LOWEST FACTOR OF SAFETY AT EACH GRID POINT IS TABULATED BELOW

COORDINATE	30.000	45.000	60.000	75.000	90.000	105.000	120.000
1455.000	1000.000	1.752	1.752	1.756	1.763	1.772	1.850
1440.000	1000.000	1.751	1.752	1.757	1.764	1.776	1.792
1425.000	1000.000	1000.000	1.753	1.757	1.766	1.781	1.802
1410.000	1000.000	1000.000	1.752	1.757	1.770	1.791	1.823
1395.000	1000.000	1000.000	1.753	1.757	1.777	1.811	1.867
1380.000	1000.000	1000.000	1000.000	1.758	1.793	1.866	1.996

MINIMUM FACTORS OF SAFETY OCCUR AT THE FOLLOWING 2 CENTERS

FACTOR OF SAFETY = 1.751 AT (45.000,1440.000)
FACTOR OF SAFETY = 1.752 AT (60.000,1410.000)

AUTOMATIC SEARCH WILL BE MADE ONLY ON THE CENTER WITH THE SMALLEST F.S. MORE SEARCH FROM OTHER CENTER MAY BE NEEDED TO ENSURE THAT MINIMUM F.S. IS OBTAINED.

AT POINT (45 1440) RADIUS 96.555
THE MINIMUM FACTOR OF SAFETY IS 1.751

FACTORS OF SAFETY BASED ON SEARCH

IN THE FOLLOWING TABLE WARNING INDICATES HOW MANY TIMES THE MAXIMUM RADIUS IS LIMITED BY THE END POINTS OF GROUND LINES

CENTER X COORDINATE	CENTER Y COORDINATE	NO. OF CIRCLE TOTAL	CRITIC.	RADIUS	LOWEST F.S.	WARNING
45	1440	7	7	96.555	1.751	1
49	1440	6	6	95.092	1.752	1
41	1440	2	2	98.044	1.751	1
45	1444	5	5	100.274	1.751	1
45	1448	6	6	103.982	1.751	1
45	1452	6	6	107.718	1.751	1
49	1448	7	7	102.513	1.751	1
41	1448	5	5	105.475	1.751	1
46	1448	6	6	103.627	1.751	1
44	1448	5	5	104.366	1.751	1
45	1449	6	6	104.916	1.751	1
45	1447	5	5	103.079	1.751	1

AT POINT (45 1448) RADIUS 103.982

THE MINIMUM FACTOR OF SAFETY IS 1.751

SUMMARY OF SLICE INFORMATION FOR MOST CRITICAL SLIP SURFACE

SL. NO.	SOIL NO.	SLICE WIDTH	SLICE HEIGHT	WATER HEIGHT	BOTTOM SINE	TOTAL WEIGHT	EFFEC. WEIGHT	RESIS. MOMENT	DRIVING MOMENT
1	3	0.836	0.020	0.000	.335	.222E+01	.222E+01	.152E+03	.772E+02
2	3	0.836	0.053	0.000	.343	.596E+01	.596E+01	.408E+03	.213E+03
3	3	0.836	0.078	0.000	.351	.880E+01	.880E+01	.600E+03	.321E+03
4	3	0.836	0.095	0.000	.359	.107E+02	.107E+02	.728E+03	.400E+03
5	3	0.836	0.104	0.000	.367	.117E+02	.117E+02	.792E+03	.446E+03
6	3	0.836	0.104	0.000	.375	.117E+02	.117E+02	.792E+03	.458E+03
7	3	0.836	0.096	0.000	.383	.108E+02	.108E+02	.728E+03	.431E+03
8	3	0.836	0.079	0.000	.391	.895E+01	.895E+01	.600E+03	.364E+03
9	3	0.836	0.054	0.000	.399	.611E+01	.611E+01	.408E+03	.254E+03
10	3	0.836	0.020	0.000	.407	.229E+01	.229E+01	.152E+03	.968E+02
							SUM	.536E+04	.306E+04

AT CENTER (45.000 , 1448.000) WITH RADIUS 103.982 AND SEIS. COEFF. 0.00
FACTOR OF SAFETY BY NORMAL METHOD IS 1.750
FACTOR OF SAFETY BY SIMPLIFIED BISHOP METHOD IS 1.751

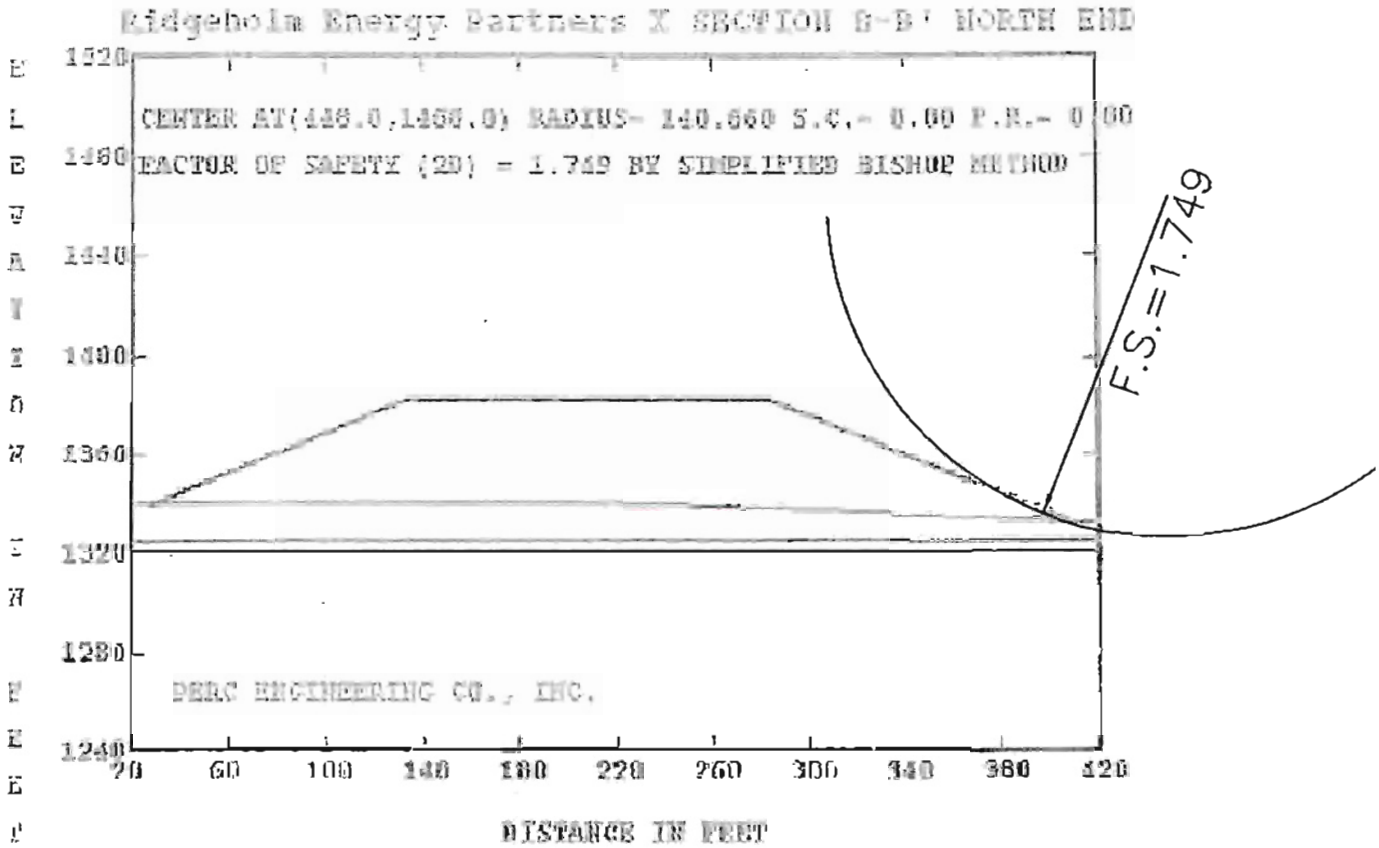
Ridgeholm Energy Partners X SECTION G-B' NORTH END
CENTER AT(448.0,1456.0) RADIUS= 140.660 S.C.= 0.00 F.R.= 0.00
FACTOR OF SAFETY (2D) = 1.749 BY SIMPLIFIED BISHOP METHOD
F.S.=1.749
PERC ENGINEERING CO., INC.
ELEVATION IN FEET
1520
1480
1440
1400
1360
1320
1280
1240
20
60
100
140
180
220
260
300
340
380
420
DISTANCE IN FEET

REAME (ROTATIONAL EQUILIBRIUM ANALYSIS OF MULTILAYERED EARTHWORKS)
THIS 2004 VERSION IS LICENSED BY CIVIL ENGINEERING SOFTWARE CENTER TO

PERC ENGINEERING CO., INC.

INPUT FILE NAME -C:\REAME2004\B-B' NORTH END.DAT

TITLE -Ridgeholm Energy Partners X SECTION B-B' NORTH END

NO. OF STATIC AND SEISMIC CASES (NCASE) = 1

NO. OF NONCIRCULAR SLIP SURFACES (NSS) = 0

TWO-DIMENSIONAL ANALYSIS (THREED = 0)

CASE NO. 1 SEISMIC COEFFICIENT (SEIC) =0.000

NO. OF BOUNDARY LINES (NBL) = 4

NO. OF POINTS ON BOUNDARY LINE 1 = 2
1 X COORD.= 0 Y COORD.= 1320
2 X COORD.= 474.3 Y COORD.= 1320

NO. OF POINTS ON BOUNDARY LINE 2 = 2
1 X COORD.= 0 Y COORD.= 1325
2 X COORD.= 474.3 Y COORD.= 1325

NO. OF POINTS ON BOUNDARY LINE 3 = 5
1 X COORD.= 0 Y COORD.= 1340
2 X COORD.= 204.8 Y COORD.= 1340
3 X COORD.= 249.6 Y COORD.= 1339.99
4 X COORD.= 313.6 Y COORD.= 1337.04
5 X COORD.= 474.3 Y COORD.= 1330.13

NO. OF POINTS ON BOUNDARY LINE 4 = 7
1 X COORD.= 28 Y COORD.= 1340.43
2 X COORD.= 132 Y COORD.= 1382.02
3 X COORD.= 132.8 Y COORD.= 1382.27
4 X COORD.= 283.2 Y COORD.= 1382.27
5 X COORD.= 284 Y COORD.= 1382.18
6 X COORD.= 284.8 Y COORD.= 1381.94
7 X COORD.= 406.4 Y COORD.= 1333.24

LINE NO. AND SLOPE OF EACH SEGMENT ARE:

1	0.000					
2	0.000					
3	0.000	0.000	-0.046	-0.043		
4	0.400	0.312	0.000	-0.112	-0.300	-0.400

MIN. DEPTH OF TALLEST SLICE (DMIN) = 0
NO. OF RADIUS CONTROL ZONES (NRCZ) = 1

RADIUS DECREMENT (RDEC) FOR ZONE 1 = 0
NO. OF CIRCLES (NCIR) FOR ZONE 1 = 5
ID NO. FOR FIRST CIRCLE (INFC) FOR ZONE 1 = 1
NO. OF BOTTOM LINES (NOL) FOR ZONE 1 = 1

LINE NO. (LINO)	BEG. NO. (NBP)	END NO. (NEP)
1	1	2

UNIT WEIGHT OF WATER (GW) = 62.4

SOIL NO.	COHESION	FRIC. ANGLE	UNIT WEIGHT
1	2000	40	175
2	100.8	27.9	133.5
3	0	35	135

NO SEEPAGE
USE GRID
NO. OF SLICES (NSLI) = 10
NO. OF ADD. CIRCLES (NAC) = 3
ANALYSIS BY SIMPLIFIED BISHOP METHOD (MTHD=2)
NUMBER OF FORCES (NFO)= 0
SOFT SOIL NUMBER (SSN)= 0
INPUT COORD. OF GRID POINTS 1,2,AND 3

POINT 1 X COORD. = 340 Y COORD. = 1480
POINT 2 X COORD. = 340 Y COORD. = 1380
POINT 3 X COORD. = 420 Y COORD. = 1380

X INCREMENT (XINC) = 8 Y INCREMENT (YINC) = 8
NO. OF DIVISIONS BETWEEN POINTS 1 AND 2 (ND12) = 5
NO. OF DIVISIONS BETWEEN POINTS 2 AND 3 (ND23) = 4
ONLY A SUMMARY TABLE IS PRINTED (NPRT = 0)
SLICES WILL BE SUBDIVIDED

AUTOMATIC SEARCH WILL FOLLOW AFTER GRID

FACTORS OF SAFETY BASED ON GRID

IN THE FOLLOWING TABLE WARNING INDICATES HOW MANY TIMES THE
MAXIMUM RADIUS IS LIMITED BY THE END POINTS OF GROUND LINES

CENTER X COORDINATE	CENTER Y COORDINATE	NO. OF CIRCLE TOTAL	CRITIC.	RADIUS	LOWEST F.S.	WARNING
340	1480	14	14	113.976	1.832	0
340	1460	14	14	95.338	1.789	0
340	1440	14	14	76.700	1.797	0
340	1420	14	14	58.062	1.811	0

340	1400	14	14	39.424	1.839	0
340	1380	14	14	20.786	1.918	0
360	1480	8	8	120.736	1.772	1
360	1460	14	14	102.151	1.776	1
360	1440	14	14	83.584	1.782	1
360	1420	14	14	65.045	1.793	1
360	1400	14	14	46.488	1.811	0
360	1380	14	14	27.849	1.850	0
380	1480	8	8	127.560	1.763	1
380	1460	8	8	108.940	1.764	1
380	1440	8	8	90.326	1.767	1
380	1420	8	8	71.724	1.771	1
380	1400	8	8	53.141	1.779	1
380	1380	14	14	34.598	1.796	1
400	1480	8	8	134.513	1.756	1
400	1460	8	8	115.876	1.756	1
400	1440	8	8	97.239	1.757	1
400	1420	8	8	78.603	1.757	1
400	1400	8	8	59.969	1.758	1
400	1380	8	8	41.337	1.760	1
420	1480	8	8	141.601	1.752	1
420	1460	8	8	122.968	1.751	1
420	1440	8	8	104.337	1.751	1
420	1420	8	8	85.708	1.750	1
420	1400	7	7	67.141	1.751	1
420	1380	6	6	48.569	1.752	1

GRID IS EXPANDED AS FOLLOWS SO MINIMUM FACTOR OF SAFETY FALLS WITHIN THE GRID

440	1480	7	7	148.915	1.750	1
440	1460	7	7	130.263	1.750	1
440	1440	6	6	111.696	1.750	1
440	1420	1	1	93.039	1000.000	1
440	1400	1	1	74.739	1000.000	1
440	1380	1	1	57.580	1000.000	1
460	1480	1	1	156.242	1000.000	1
460	1460	1	1	137.627	1000.000	1
460	1440	1	1	119.460	1000.000	1
460	1420	1	0	100.000	1000.000	0
460	1400	1	0	80.000	1000.000	0
460	1380	1	0	60.000	1000.000	0

LOWEST FACTOR OF SAFETY AT EACH GRID POINT IS TABULATED BELOW

COORDINATE	340.000	360.000	380.000	400.000	420.000	440.000	460.000
1480.000	1.832	1.772	1.763	1.756	1.752	1.750	1000.000
1460.000	1.789	1.776	1.764	1.756	1.751	1.750	1000.000
1440.000	1.797	1.782	1.767	1.757	1.751	1.750	1000.000
1420.000	1.811	1.793	1.771	1.757	1.750	1000.000	1000.000
1400.000	1.839	1.811	1.779	1.758	1.751	1000.000	1000.000

1380.000 1.918 1.850 1.796 1.760 1.752 1000.000 1000.000

MINIMUM FACTORS OF SAFETY OCCUR AT THE FOLLOWING 2 CENTERS

FACTOR OF SAFETY = 1.750 AT (440.000,1460.000)
FACTOR OF SAFETY = 1.750 AT (420.000,1420.000)

AUTOMATIC SEARCH WILL BE MADE ONLY ON THE CENTER WITH THE SMALLEST F.S. MORE SEARCH FROM OTHER CENTER MAY BE NEEDED TO ENSURE THAT MINIMUM F.S. IS OBTAINED.

AT POINT (440 1460) RADIUS 130.263
THE MINIMUM FACTOR OF SAFETY IS 1.750

FACTORS OF SAFETY BASED ON SEARCH

IN THE FOLLOWING TABLE WARNING INDICATES HOW MANY TIMES THE MAXIMUM RADIUS IS LIMITED BY THE END POINTS OF GROUND LINES

CENTER X COORDINATE	CENTER Y COORDINATE	NO. OF CIRCLE TOTAL	CRITIC.	RADIUS	LOWEST F.S.	WARNING
440	1460	7	7	130.263	1.750	1
448	1460	5	5	133.235	1.750	1
456	1460	1	1	136.119	1000.000	1
448	1468	5	5	140.660	1.749	1
448	1476	6	6	148.099	1.749	1
456	1468	1	1	143.598	1000.000	1
440	1468	7	7	137.722	1.750	1
450	1468	6	6	141.408	1.749	1
446	1468	6	6	139.918	1.749	1
448	1470	5	5	142.528	1.750	1
448	1466	7	7	138.814	1.750	1

AT POINT (448 1468) RADIUS 140.660

THE MINIMUM FACTOR OF SAFETY IS 1.749

SUMMARY OF SLICE INFORMATION FOR MOST CRITICAL SLIP SURFACE

SL. NO.	SOIL NO.	SLICE WIDTH	SLICE HEIGHT	WATER HEIGHT	BOTTOM SINE	TOTAL WEIGHT	EFFEC. WEIGHT	RESIS. MOMENT	DRIVING MOMENT
1	3	0.953	0.019	0.000	-.402	.250E+01	.250E+01	.225E+03	.141E+03
2	3	0.953	0.052	0.000	-.395	.669E+01	.669E+01	.605E+03	.372E+03
3	3	0.953	0.076	0.000	-.388	.982E+01	.982E+01	.891E+03	.536E+03
4	3	0.953	0.092	0.000	-.382	.119E+02	.119E+02	.108E+04	.637E+03
5	3	0.953	0.100	0.000	-.375	.129E+02	.129E+02	.118E+04	.679E+03
6	3	0.953	0.100	0.000	-.368	.128E+02	.128E+02	.118E+04	.664E+03
7	3	0.953	0.091	0.000	-.361	.118E+02	.118E+02	.108E+04	.598E+03
8	3	0.953	0.075	0.000	-.355	.967E+01	.967E+01	.891E+03	.483E+03
9	3	0.953	0.051	0.000	-.348	.655E+01	.655E+01	.605E+03	.320E+03

10	3	0.953	0.019	0.000	-.341	.243E+01	.243E+01	.225E+03	.117E+03
							SUM	.795E+04	.455E+04

AT CENTER (448.000 , 1468.000) WITH RADIUS 140.660 AND SEIS. COEFF. 0.00
FACTOR OF SAFETY BY NORMAL METHOD IS 1.749
FACTOR OF SAFETY BY SIMPLIFIED BISHOP METHOD IS 1.749

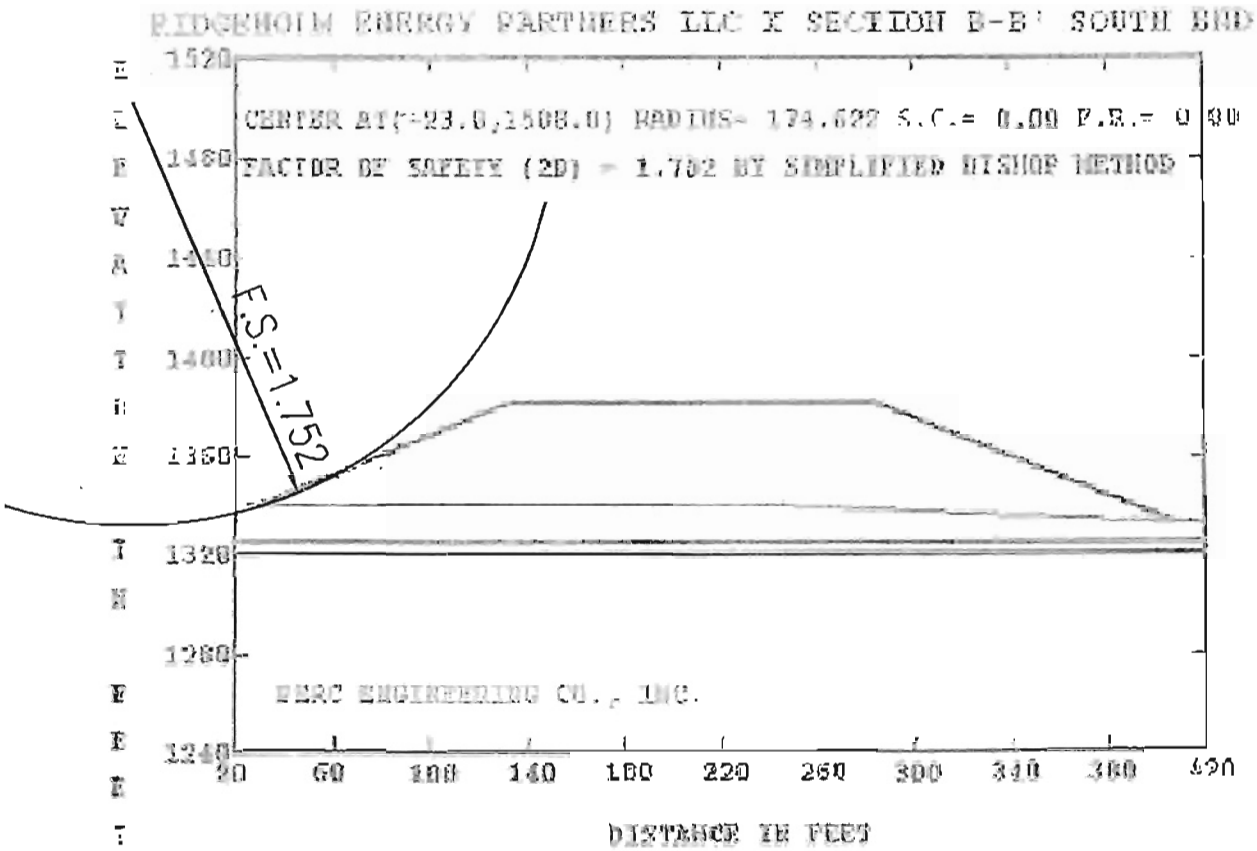
RIDGEHOLM ENERGY PARTNERS LLC X SECTION B-B' SOUTH END
CENTER AT(-23.0,1508.0) RADIUS= 174.622 S.C.= 0.00 F.E.= 0.00
FACTOR OF SAFETY (2D) = 1.752 BY SIMPLIFIED BISHOP METHOD
F.S.=1.752
ELEVATION IN FEET
1520
1480
1440
1400
1360
1320
1280
1240
20
60
100
140
180
220
260
300
340
380
420
DISTANCE IN FEET
BERC ENGINEERING CO., INC.

REAME (ROTATIONAL EQUILIBRIUM ANALYSIS OF MULTILAYERED EARTHWORKS)
THIS 2004 VERSION IS LICENSED BY CIVIL ENGINEERING SOFTWARE CENTER TO

PERC ENGINEERING CO., INC.

INPUT FILE NAME -C:\REAME2004\B-B' SOUTH END.DAT

TITLE -RIDGEHOLM ENERGY PARTNERS LLC X SECTION B-B' SOUTH END

NO. OF STATIC AND SEISMIC CASES (NCASE) = 1

NO. OF NONCIRCULAR SLIP SURFACES (NSS) = 0

TWO-DIMENSIONAL ANALYSIS (THREED = 0)

CASE NO. 1 SEISMIC COEFFICIENT (SEIC) =0.000

NO. OF BOUNDARY LINES (NBL) = 4

NO. OF POINTS ON BOUNDARY LINE 1 = 2
1 X COORD.= 0 Y COORD.= 1320
2 X COORD.= 474.3 Y COORD.= 1320

NO. OF POINTS ON BOUNDARY LINE 2 = 2
1 X COORD.= 0 Y COORD.= 1325
2 X COORD.= 474.3 Y COORD.= 1325

NO. OF POINTS ON BOUNDARY LINE 3 = 5
1 X COORD.= 0 Y COORD.= 1340
2 X COORD.= 204.8 Y COORD.= 1340
3 X COORD.= 249.6 Y COORD.= 1339.99
4 X COORD.= 313.6 Y COORD.= 1337.04
5 X COORD.= 474.3 Y COORD.= 1330.13

NO. OF POINTS ON BOUNDARY LINE 4 = 7
1 X COORD.= 28 Y COORD.= 1340.43
2 X COORD.= 132 Y COORD.= 1382.02
3 X COORD.= 132.8 Y COORD.= 1382.27
4 X COORD.= 283.2 Y COORD.= 1382.27
5 X COORD.= 284 Y COORD.= 1382.18
6 X COORD.= 284.8 Y COORD.= 1381.94
7 X COORD.= 406.4 Y COORD.= 1333.24

LINE NO. AND SLOPE OF EACH SEGMENT ARE:

1	0.000					
2	0.000					
3	0.000	0.000	-0.046	-0.043		
4	0.400	0.312	0.000	-0.112	-0.300	-0.400

MIN. DEPTH OF TALLEST SLICE (DMIN) = 0
NO. OF RADIUS CONTROL ZONES (NRCZ) = 1

RADIUS DECREMENT (RDEC) FOR ZONE 1 = 0
NO. OF CIRCLES (NCIR) FOR ZONE 1 = 5
ID NO. FOR FIRST CIRCLE (INFC) FOR ZONE 1 = 1
NO. OF BOTTOM LINES (NOL) FOR ZONE 1 = 1

LINE NO. (LINO)	BEG. NO. (NBP)	END NO. (NEP)
1	1	2

UNIT WEIGHT OF WATER (GW) = 62.4

SOIL NO.	COHESION	FRIC. ANGLE	UNIT WEIGHT
1	2000	40	175
2	100.8	27.9	133.5
3	0	35	135

NO SEEPAGE
USE GRID
NO. OF SLICES (NSLI) = 10
NO. OF ADD. CIRCLES (NAC) = 3
ANALYSIS BY SIMPLIFIED BISHOP METHOD (MTHD=2)
NUMBER OF FORCES (NFO)= 0
SOFT SOIL NUMBER (SSN)= 0
INPUT COORD. OF GRID POINTS 1,2,AND 3

POINT 1 X COORD. = 5 Y COORD. = 1480
POINT 2 X COORD. = 5 Y COORD. = 1380
POINT 3 X COORD. = 65 Y COORD. = 1380

X INCREMENT (XINC) = 8 Y INCREMENT (YINC) = 8
NO. OF DIVISIONS BETWEEN POINTS 1 AND 2 (ND12) = 5
NO. OF DIVISIONS BETWEEN POINTS 2 AND 3 (ND23) = 4
ONLY A SUMMARY TABLE IS PRINTED (NPRT = 0)
SLICES WILL BE SUBDIVIDED

AUTOMATIC SEARCH WILL FOLLOW AFTER GRID

FACTORS OF SAFETY BASED ON GRID

IN THE FOLLOWING TABLE WARNING INDICATES HOW MANY TIMES THE MAXIMUM RADIUS IS LIMITED BY THE END POINTS OF GROUND LINES

CENTER X COORDINATE	CENTER Y COORDINATE	NO. OF CIRCLE TOTAL	CRITIC.	RADIUS	LOWEST F.S.	WARNING
5	1480	8	8	138.298	1.753	1
5	1460	8	8	119.672	1.752	1
5	1440	7	7	101.112	1.753	1
5	1420	7	7	82.523	1.753	1

5	1400	1	1	63.856	1000.000	1
5	1380	1	1	45.769	1000.000	1
20	1480	8	8	132.924	1.755	1
20	1460	8	8	114.284	1.755	1
20	1440	8	8	95.645	1.755	1
20	1420	8	8	77.008	1.754	1
20	1400	7	7	58.464	1.756	1
20	1380	6	6	39.810	1.755	1
35	1480	8	8	127.630	1.759	1
35	1460	8	8	108.990	1.759	1
35	1440	8	8	90.350	1.760	1
35	1420	8	8	71.712	1.761	1
35	1400	8	8	53.075	1.762	1
35	1380	8	8	34.444	1.765	1
50	1480	8	8	122.416	1.764	1
50	1460	8	8	103.789	1.766	1
50	1440	8	8	85.167	1.768	1
50	1420	8	8	66.555	1.772	1
50	1400	8	8	47.960	1.779	1
50	1380	14	14	29.407	1.798	1
65	1480	8	8	117.280	1.771	1
65	1460	8	8	98.677	1.774	1
65	1440	8	8	80.088	1.779	1
65	1420	14	14	61.523	1.788	1
65	1400	14	14	43.000	1.806	1
65	1380	8	8	24.561	1.857	1

GRID IS EXPANDED AS FOLLOWS SO MINIMUM FACTOR OF SAFETY FALLS WITHIN THE GRID

-10	1480	7	7	143.797	1.752	1
-10	1460	6	6	125.231	1.752	1
-10	1440	1	1	106.575	1000.000	1
-10	1420	1	1	88.178	1000.000	1
-10	1400	1	1	70.658	1000.000	1
-10	1380	1	1	54.861	1000.000	1
-25	1480	1	1	149.294	1000.000	1
-25	1460	1	1	130.790	1000.000	1
-25	1440	1	1	112.797	1000.000	1
-25	1420	1	1	95.605	1000.000	1
-25	1400	1	1	79.734	1000.000	1
-25	1380	1	0	65.000	1000.000	0
-25	1500	5	5	167.947	1.752	1
-10	1500	7	7	162.448	1.753	1
5	1500	8	8	156.928	1.753	1
20	1500	8	8	151.564	1.756	1
35	1500	8	8	146.271	1.759	1
50	1500	8	8	141.047	1.763	1
65	1500	8	8	135.892	1.770	1

LOWEST FACTOR OF SAFETY AT EACH GRID POINT IS TABULATED BELOW

COORDINATE	-25.000	-10.000	5.000	20.000	35.000	50.000	65.000
1500.000	1.752	1.753	1.753	1.756	1.759	1.763	1.770
1480.000	1000.000	1.752	1.753	1.755	1.759	1.764	1.771
1460.000	1000.000	1.752	1.752	1.755	1.759	1.766	1.774
1440.000	1000.000	1000.000	1.753	1.755	1.760	1.768	1.779
1420.000	1000.000	1000.000	1.753	1.754	1.761	1.772	1.788
1400.000	1000.000	1000.000	1000.000	1.756	1.762	1.779	1.806
1380.000	1000.000	1000.000	1000.000	1.755	1.765	1.798	1.857

MINIMUM FACTORS OF SAFETY OCCUR AT THE FOLLOWING 3 CENTERS

FACTOR OF SAFETY = 1.752 AT (-25.000,1500.000)
FACTOR OF SAFETY = 1.752 AT (-10.000,1480.000)
FACTOR OF SAFETY = 1.755 AT (20.000,1380.000)

AUTOMATIC SEARCH WILL BE MADE ONLY ON THE CENTER WITH THE SMALLEST F.S. MORE SEARCH FROM OTHER CENTER MAY BE NEEDED TO ENSURE THAT MINIMUM F.S. IS OBTAINED.

AT POINT (-25 1500) RADIUS 167.947
THE MINIMUM FACTOR OF SAFETY IS 1.752

FACTORS OF SAFETY BASED ON SEARCH

IN THE FOLLOWING TABLE WARNING INDICATES HOW MANY TIMES THE MAXIMUM RADIUS IS LIMITED BY THE END POINTS OF GROUND LINES

CENTER X COORDINATE	CENTER Y COORDINATE	NO. OF CIRCLE TOTAL	CRITIC.	RADIUS	LOWEST F.S.	WARNING
-25	1500	5	5	167.947	1.752	1
-17	1500	6	6	165.009	1.752	1
-33	1500	1	1	170.832	1000.000	1
-25	1508	5	5	175.366	1.752	1
-25	1516	6	6	182.802	1.752	1
-17	1508	7	7	172.420	1.752	1
-33	1508	1	1	178.328	1000.000	1
-23	1508	6	6	174.622	1.752	1
-21	1508	6	6	173.905	1.752	1
-23	1510	6	6	176.487	1.752	1
-23	1506	5	5	172.785	1.752	1

AT POINT (-23 1508) RADIUS 174.622

THE MINIMUM FACTOR OF SAFETY IS 1.752

AFTER SEARCH, MINIMUN F.S. STILL FALLS OUTSIDE THE GRID, SO GRID IS EXPANDED

CENTER X COORDINATE	CENTER Y COORDINATE	NO. OF CIRCLE TOTAL	CRITIC.	RADIUS	LOWEST F.S.	WARNING

-25	1520	6	6	186.534	1.752	1
-10	1520	8	8	180.977	1.752	1
5	1520	8	8	175.561	1.754	1
20	1520	8	8	170.205	1.756	1
35	1520	8	8	164.912	1.759	1
50	1520	8	8	159.681	1.762	1
65	1520	8	8	154.511	1.832	1

SUMMARY OF SLICE INFORMATION FOR MOST CRITICAL SLIP SURFACE

SL. NO.	SOIL NO.	SLICE WIDTH	SLICE HEIGHT	WATER HEIGHT	BOTTOM SINE	TOTAL WEIGHT	EFFEC. WEIGHT	RESIS. MOMENT	DRIVING MOMENT
1	3	1.068	0.019	0.000	.344	.276E+01	.276E+01	.317E+03	.166E+03
2	3	1.068	0.052	0.000	.350	.745E+01	.745E+01	.853E+03	.455E+03
3	3	1.068	0.076	0.000	.356	.110E+02	.110E+02	.125E+04	.682E+03
4	3	1.068	0.093	0.000	.362	.134E+02	.134E+02	.152E+04	.845E+03
5	3	1.068	0.101	0.000	.368	.146E+02	.146E+02	.166E+04	.936E+03
6	3	1.068	0.101	0.000	.374	.146E+02	.146E+02	.166E+04	.954E+03
7	3	1.068	0.093	0.000	.380	.135E+02	.135E+02	.152E+04	.893E+03
8	3	1.068	0.077	0.000	.386	.111E+02	.111E+02	.125E+04	.751E+03
9	3	1.068	0.053	0.000	.393	.759E+01	.759E+01	.853E+03	.520E+03
10	3	1.068	0.020	0.000	.399	.283E+01	.283E+01	.318E+03	.197E+03
							SUM	.112E+05	.640E+04

AT CENTER (-23.000 , 1508.000) WITH RADIUS 174.622 AND SEIS. COEFF. 0.00
FACTOR OF SAFETY BY NORMAL METHOD IS 1.751
FACTOR OF SAFETY BY SIMPLIFIED BISHOP METHOD IS 1.752

COMPANY NAME: Ridgeholin Energy Partners

MINE NAME: John Poe Mine

DRILL HOLE: REPJPDH4

COLLECTED BY: Client

DATE COLLECTED: 2/9/15

ANALYZED BY: JC,SR,JK,JR

DATE ANALYZED: 2/13/15

All analysis is performed according to EPA standards.

INTERVAL		PASTE pH	% SULFUR	MAX. POT. *ACIDITY	NEUT. *POT	A-B *ACCOUNT	ACID FORMING
0.00	5.00	4.380	0.0031	0.097	1.750	1.653	N
5.00	6.50	4.240	0.0005	0.016	0.750	0.734	N
6.50	9.00	6.260	0.0100	0.313	1.000	0.688	N
9.00	14.00	5.900	0.0005	0.016	4.250	4.234	N
14.00	17.50	6.300	0.0010	0.031	4.750	4.719	N
17.50	22.50	4.710	0.0026	0.081	5.250	5.169	N
22.50	27.50	4.840	0.0001	0.003	4.500	4.497	N
27.50	30.00	4.710	0.0056	0.175	1.750	1.575	N
30.00	33.00	4.680	0.0029	0.091	6.250	6.159	N
33.00	37.00	4.500	0.0090	0.281	5.750	5.469	N
37.00	42.00	4.410	0.0065	0.203	4.500	4.297	N
42.00	47.00	4.300	0.0050	0.156	5.500	5.344	N
47.00	51.00	4.350	0.0045	0.141	4.750	4.609	N
51.00	54.00	3.440	0.1040	3.250	2.750	-0.500	N
54.00	57.50	Sample Lost	Sample Lost	0.000	Sample Lost	0.000	N
57.50	59.50	3.950	0.0440	1.375	1.000	-0.375	N
59.50	64.50	3.300	0.0120	0.375	2.500	2.125	N
**AVERAGE		1.265	0.0102	0.317	3.672	3.355	N

*Calculated in tons CaCo3 per 1000 tons of material.
**Averages do not include coal seam to be mined or intervals below lowest seam.
***Not analyzed

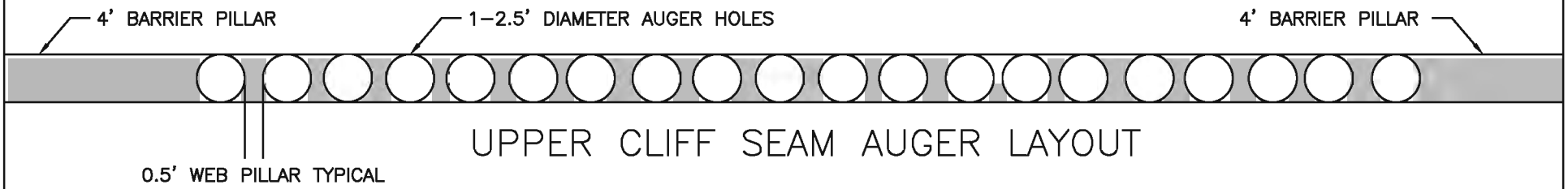

UPPER CLIFF SEAM AUGER LAYOUT

PERC
ENGINEERING CO., INC.
1606 Hwy. 78 West Jasper, AL 35501/P.O. Box 1712–35502
(205) 384–5553 Office (205) 295–3114 Fax

RIDGEHOLM ENERGY PARTNERS, LLC.
JOHN POE MINE / P-3981
ATTACHMENT III-A-1(a)
AUGER MINING LAYOUT
20 HOLE PATTERN

.DWG NAME:	REPJPM–III–A–1	DATE:	05–19–2015
DRAWN BY:	S.A.E.	SCALE:	NONE
APPROVED BY:	L.G.S.	JOB NUMBER:	15–04482–002

V:\Projects\Ridgeholm Energy Partners\John Poe Mine P-3981\REPJPM-III-A-1.dwg 05/19/15 13:29

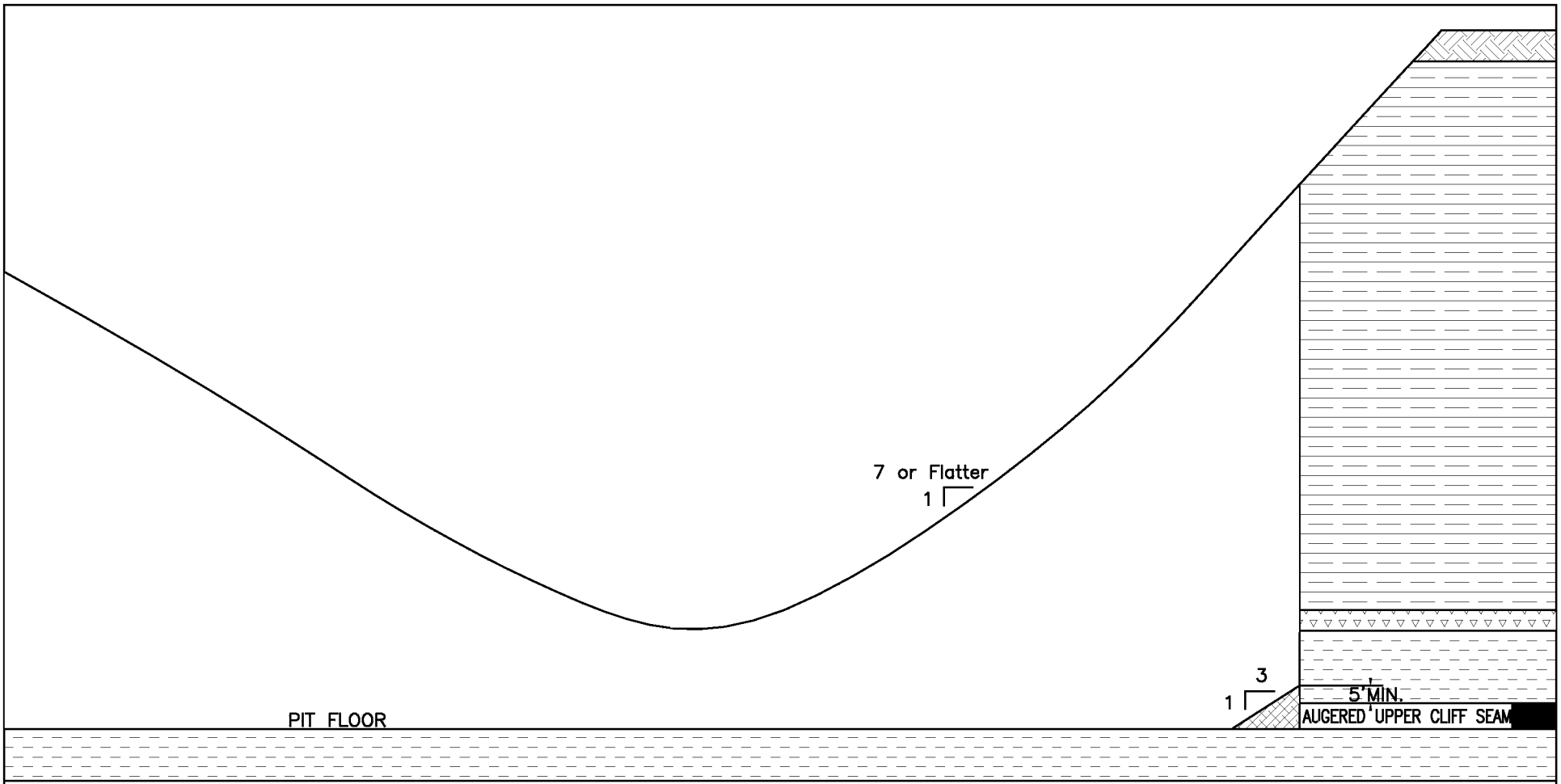

SURFACE MATERIAL

SANDSTONE

CLAY

SHALE

SEMI IMPERVIOUS CLAY

PRIOR TO THE BACKFILLING THE FINAL HIGHWALL ALL AUGER HOLES WILL BE SEALED WITH A NON TOXIC, NON–ACID FORMING CLAY MATERIAL. THIS CLAY MATERIAL WILL BE COMPACTED IN SIX (6) INCH LIFTS TO NINETY –FIVE (95%) PERCENT OF THE STANDARD PROCTOR DENSITY, A MINIMUM OF FIVE (5) FEET ABOVE THE TOP OF THE OPENING.

PERC ENGINEERING CO., INC.
1908 Hwy. 78 West Jasper, AL 35501/P.O. Box 1712–35502
(205) 384–5563 Office (205) 295–3114 Fax

RIDGEHOLM ENERGY PARTNERS, LLC.
JOHN POE MINE / P-3981
ATTACHMENT III-A-6
TYPICAL CROSS SECTION
SEALING OF AUGER HOLES

DWG NAME:	REPJPM–III–A–6	DATE:	05–19–2015
DRAWN BY:	S.A.E.	SCALE:	NONE
APPROVED BY:	L.G.S.	JOB NUMBER:	15–04482–002

X:\Mining\Ridgeholm Energy Partners\John Poe Mine P-3981\ATP\Poe III-A-6.Dwg 05/20/15 15:30

Applicant: Ridgeholm Energy Partners, LLC
Mine Name: John Poe Mine
Permit Number: P-3981

Permit Application for Auger Mining

In addition to completing all applicable portions of the "Permit Application for Surface and Underground Mining", anyone who intends to conduct auger mining operations shall complete the following: (785.20, 819)

(a) Give the diameter, depth, and spacing of auger holes including width of barrier pillars to be left between holes or series of holes.
Auger to be used is a Salem 1500-B with single head 16" to 30"
Auger Head Diameter - Upper Cliff Seam.....30 inch
Maximum Depth of Cover.....60 feet
Maximum Depth of Auger Hole.....200 feet
Minimum Hole Spacing.....3 feet
Pillar Width Range.....min. 4 feet or Greater
Web Thickness.....0.5 feet
Number of Holes Between Barrier Pillar 20

Barrier Pillar Width.....4 feet minimum on 63.5' centers (Upper Cliff Coal Seam)

See Attachment III-A-1(a), Typical Auger Mining Layout

(b) Is underground mining to be conducted in the immediate area following completion of auger mining operations?
( ) Yes (X) No

If yes, describe the steps to be taken to provide access for such operations to the remaining coal reserve. The outcrop of the Upper Cliff Coal Seam is located on the Northwest side of County Road 675 which will provide over ½ mile of access along the outcrop. Also underground operations have a point of access in the SE 1/4 of SW 1/4 of Section 20 which is located in the NE corner of Increment No. 1 and also there will be approximately ½ mile of access on the Northeast side of Increment No.2.

(c) Is auger mining to be conducted contemporaneously with underground mining operations and in the same seam?

( ) Yes (X) No

If yes, describe the measures to be taken to prevent 'breaking through' into underground workings.

(d) Is auger mining to be conducted:

(1) In conjunction with an active surface mining operation?

(X) Yes ( ) No

(2) In an in-active surface mine? ( ) Yes (X) No

(3) Along a natural outcrop which has not been previously disturbed?

( ) Yes (X) No

(e) Describe in detail the measures to be taken to reclaim the highwall if augering is not being conducted in conjunction with a surface mining operation.

See Part IV for Reclamation Plan

(f) Describe and locate on the permit map all the power lines, pipelines, buildings and other facilities located above the proposed auger mining operation. If subsidence resulting from auger mining is anticipated, describe in detail the measures to be taken to prevent or mitigate adverse effects on surface structures and facilities.

All buildings and other structures are shown on the Permit Map. Also, the 30 degree angle of draw for structures and the 75 degree angle of draw for water resources are shown on the Pre-Subsidence Map. There are no wells or other water resources within the 75 degree angle of draw. There are no occupied dwellings within the 30 degree angle of draw.
No subsidence is anticipated due to the spacing of the holes and the barrier pillars to be left. Design of the auger hole layout was done using the NIOSH ARMPSHWM program.
However, in the highly unlikely event that subsidence occurs and causes material damage to any of the structures, renewable resources lands or roads Ridgeholm Energy Partners, LLC will repair the material damage to structures, roads, pasture, cropland and “Unmanged Forest Land” to its condition before subsidence or the owner of said structure will be compensated for any damage.

Applicant: Ridgeholm Energy Partners, LLC
Mine Name: John Poe Mine
Permit Number: P-3981

Narrative Description of Auger Operation

The Auger Mining System to be operated at the Ridgeholm Energy Partners, LLC John Poe Mine will only recover 78.74% for the Upper Cliff Coal Seam from a maximum depth of 200 feet.

Auger Mining will be performed in such a manner as to provide adequate support pillars between each hole. Spacing of the recovery holes will vary depending on the nature of the overburden, depth of center to center, allowing a minimum of 0.5 feet of web (Support) pillar between each recovery hole for the conditions shown above.

Dr. Chris Mark of the US Bureau of Mines (now NIOSH) initially developed the ARMPS-HWM program to predict the possibility of subsidence due to longwall mining/highwall mining. Dr. Zach Agioutantis later developed it into a windows application.

Attached are definitions of the parameters used in the ARMPS-HWM program along with Table 1 of the Program indicating the suggested minimum safety factors.

The table below shows the recommended safety factor for this application as determined by the ARMPS-HWM. As shown below the Auger Mining System panel design described earlier in this section is adequate to prevent subsidence.

Upper Cliff Coal Seam	**Recommended**	**Actual**
Overall	2.0	2.76
Web Pillars Only	1.3	1.66
Barrier Pillars Only	2.0	2.11

Drainage will be controlled from each recovery hole by allowing each hole to drain into the open pit and be pumped if necessary, to an approved sediment basin. If necessary, drainage will be treated chemically in accordance with the surface water treatment plan of this permit.

See attached the ARMPSHWM Module for the Upper Cliff Seam.

See attached the ARMPSHWM Suggested Minimum Stability Factors.

Applicant: Ridgeholm Energy Partners, LLC
Mine Name: John Poe Mine
Permit Number: P-3981

Reclamation of Auger Holes

Within 72 hours of completing each hole each auger hole will be sealed by backfilling with impervious, non-combustible clay material to a minimum of five (5) feet above the top of the auger hole and compacted to provide an impervious seal.

See Attachment III-A-6, Typical Auger Mining Opening Sealing Plan.

H. Subsidence Control Plan (784.20)

1. Include a survey which shows what structures or renewable resource lands exist within the proposed permit and adjacent area and whether subsidence, if it occurred, could cause material damage or diminution of reasonably foreseeable use of such structures or renewable resource lands. If it is determined that no material damage will occur to surface structures or renewable resource lands from subsidence, the application shall include supporting evidence of such a finding.

A Survey of occupied dwellings, features, and renewable resource lands has been conducted. The limits of the survey were determined by a 30 degree angle of draw from the outer limits of auger mining. Findings are indicated on the Pre-Subsidence Map.

No subsidence is anticipated due to the spacing of the holes and the barrier pillars left. Design of the Auger holes layout was done using the NOISH ARMPSHWM program. This program is based on the long term stability of the web and barrier pillars. However, in the highly unlikely event that subsidence occurs and causes material damage to any of the renewable resource lands including aras shown as roads, pastures, cropland and “Unmanaged Forest Land” on the Pre-Subsidence Map by unplanned subsidence, then Ridgeholm Energy Partners LLC will repair the material damage by restoring the land to a condition capable of maintaining the value and reasonably foreseeable uses that it was capable of supporting before subsidence damage. Should unplanned subsidence occur and cause material damage to any of the structures , then Ridgeholm Energy Partners LLC, will repair the damage necessary to restore the structure to its condition before subsidence or the owner of said structure will be compensated for any damage.
The Dekalb County Roads in question are No. 675, No. 676 and No. 880.
Upon issuance of approval by the Dekalb County Commission it will be provided to the ASMC prior to any Augering activities.

See Attachment III-A-1(H), Pre-Subsidence Map

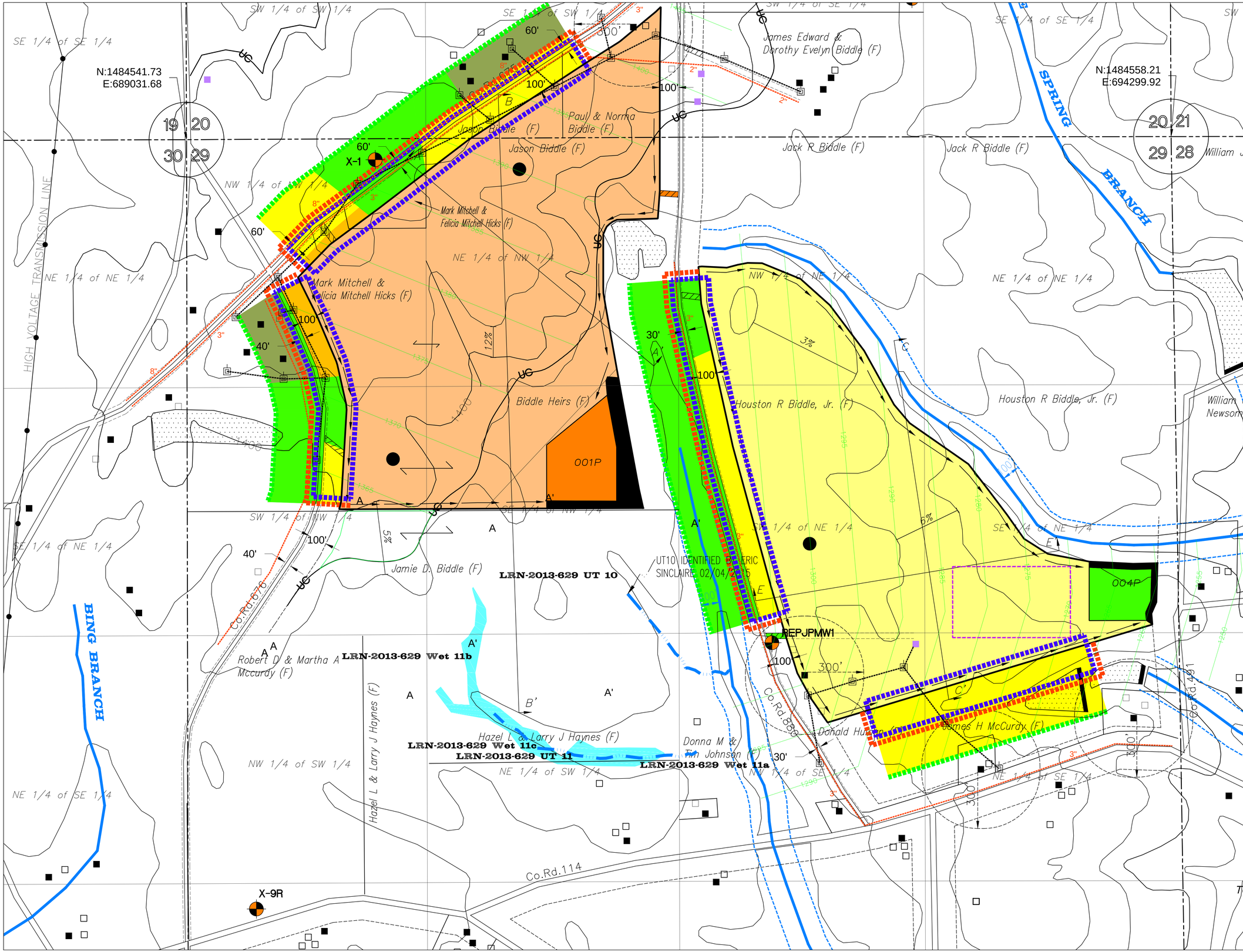

LEGEND

- Permit Boundary
- Previously Surface Mined by Others
- Occupied Dwelling
- Unoccupied Dwelling
- Out Buliding (Barn, Garage, Etc.)
- Surface Contour
- 001P Sediment Basin
- Perennial Stream
- 100' Stream Offset
- Intermittent Stream
- Natural Drainage Course
- County Road (Paved unless otherwise designated)
- County Road Right of Way
- Road (Private unless otherwise shown)
- Primary Road
- Ancillary Road
- Impounded Water
- Property Line other than Forty Line
- Land Hook
- 100' Setback from Road
- UC Upper Cliff Coal Outcrop
- Diversion Ditch
- Coal Stockpile, Location Subject to Change
- Auger Mining Extents
- 30 Degree Angle of Draw
- 75 Degree Angle of Draw
- Upper Cliff Top of Seam Contours
- Waterlines along County Road and Size
- Power Line/Power Pole
- Temporary Spoil Fill No. 1
- X-9R Groundwater Monitoring Site
- TC-DN2 Surface Water Monitoring Site
- Wetlands (U.S. Army Corp of Engineers jurisdiction)
- Increment 1
- Increment 2
- Increment 3
- Increment 4

LANDUSE AND CURVE NUMBER INFORMATION

- Unmanaged Timberland, Curve Number 70
- Pasture, Curve Number, 74
- Cropland, Curve Number, 81
- Residential, Curve Number, 74

NOTES

1) Augering will begin at the final highwall, approximate 50' inside the permit boundary.

I, Leslie G. Stephens, a Registered Professional Engineer and Land Surveyor, hereby certify this map to be true and correct to the best of my knowledge, information and belief.

Leslie G. Stephens, P.E./P.L.S. — Date
AL Reg. #14117-E

Bearings = GRID

PERC ENGINEERING CO., INC.
1606 Hwy. 78 West Jasper, AL 35501/P.O. Box 1712-35502
(205) 384-5553 Office (205) 295-3114 Fax

RIDGEHOLM ENERGY PARTNERS, LLC.
JOHN POE MINE / P-3981
ATTACHMENT III-A-1(H)
PRE-SUBSIDENCE MAP

.DWG NAME:	REPJPM Watershed	DATE:	11-30-2015
DRAWN BY:	S.A.E.	SCALE:	1"=500'
APPROVED BY:	L.G.S.	JOB NUMBER:	15-04482-002

V:\Mining\Ridgeholm Energy Partners\John Poe Mine P-3981\REPJPM.dwg 11/30/15 16:28

(b) Unplanned Subsidence. See Attachment III-A-1(H). Pre-Subsidence Map for auger mining location.

(1) Using maps, plans, and cross sections, as needed, locate the areas where coal extraction is to take place and where subsidence, if incurred, cannot be considered planned subsidence. Clearly show on a map the relationship of parts (i-v) below to critical surface features, renewable resource lands, and structures. See Permit Map.

(i) Provide a detailed mine plan map. Describe the methods of mining used, such as room and pillar, checker board, blind room or other methods.

(ii) Locate extraction panels, give geometric sizes, dimensions and orientation, and include details of length, width and height of panels. Give percent of coal left as support in ratio to percent of coal removed within the extraction panel. Provide information on crosscut and room dimensions, and both driven on what centers. Include similar information concerning any secondary recovery that is planned.

(iii) Provide details locating all permanent coal blocks and barrier pillars outside the actual extraction panels. Give geometric shapes, dimensions, and orientation of these blocks and barrier pillars.

(iv) Give anticipated date (month/year) in which mining will be conducted in each area and/or panel.

(v) Characterize variations in claystone layers immediately below the extracted coal seam(s). Include data on varying claystone thickness throughout the area covered by the subsidence control plan. Provide assurances that measures have been adopted concerning the maximization of mine stability as it relates to claystone flood conditions.

(2) Provide a detailed description of measures to be taken to prevent unplanned subsidence from causing material damage or lessening the value or reasonable foreseeable use of the surface. Describe how these measures are to be applied. Include the following information.

(i) Locate area(s) in which coal removal is not planned, including its relationship to overlying area(s) to be protected by leaving coal in place.

(ii) Locate area(s) to be backfilled or backstowed.

(iii) Describe measures to be taken on the surface to prevent material damage or diminution of the value or reasonable foreseeable use of the surface including, but not limited to:

(A) Reinforcement of sensitive structures or features;

(B) Installation of footers or other techniques designed to reduce damage caused by movement;

(C) Change of location of pipelines, utility lines or other features;

(D) Relocation of moveable improvements to sites outside the potential angle-of-draw;

(E) Monitoring to determine the commencement and degree of subsidence so that appropriate measures can be taken to prevent or reduce damage; and

(F) Describe any other prevention measures to be taken.

(3) Provide a detailed description of measures that are to be taken to mitigate the effect of any material damage or diminution of value or foreseeable use of lands which may occur as a result of unplanned subsidence. Describe how these measures are to be promptly applied in accordance with 817.124. Measures include, but are not limited to, one or more of the following:

(i) Restoration or rehabilitation of damaged structures (including surface and underground agricultural drainage systems), features and lands after subsidence to a condition capable of supporting and suitable for foreseeable use including restoration of approximate land surface contours to premining conditions in order to assure proper surface drainage.

(ii) Replacement of structures, including surface and underground agricultural drainage systems destroyed or damaged by subsidence.

(iii) Purchase of structures prior to mining or purchase of damaged structures at pre-subsidence value.

(iv) Purchase of non-cancellable insurance policies, as described in 817.124(c), payable to the surface owner in the full amount of the possible material damage or other comparable measures.

(v) Describe other mitigation measures to be taken.

(4) Provide a detailed description of measures to be taken to determine the degree of material damage or diminution of value or foreseeable use of the surface, including, but not limited to such measures as:

(i) Conducting of pre-subsidence surveys of all structures and surface features which might be materially damaged by subsidence.

(ii) Monitoring to measure deformation near specified structures or features or other appropriate locations.

3. Attach a narrative explaining the construction modification, use, maintenance, and removal of the following facilities: (780.11)

   (a) Coal removal, handling, storage, cleaning and transportation structures and facilities; See Attachment III-A-1
   (b) Spoil, coal processing waste and non-coal waste removal, handling, storage, transportation and disposal structures and facilities;
   (c) Mine facilities; and
   (d) Water pollution control facilities.

   See Attachment III-A-3

4. Describe the means to be used to maximize the use and conservation coal reserves in the permit area. (780.18, 816.59) Some of the measures are:

   A) Mining the deepest seam that is economically feasible to mine.
   B) Rehandling overburden in order to maximize coal recovery that would normally be lost in the toe of the spoil.
   C) Processing and blending coal that in its "raw" condition would not have a market.
   D) Removing by augering, coal underlying the right-of-way of Dekalb County Roads 675, 676 & 880 that would otherwise not be recovered.

5. Describe measures to be taken to ensure that all debris, acid-forming and toxic-forming materials and materials constituting a fire hazard are disposed of in accordance with 816.89 and 816.103; include contingency plans to prevent sustained combustion of such material. (780.18)

   In an effort to prevent the formation of acid mine drainage, the open pits will be cleaned of coal cleanings produced as a result of the recovery of the seams. Each pit will be cleaned before backfilling with overburden material from the following pits. The removed material will be stored within the coal stockpile for further blending or shipped offsite for further processing. Any pit cleanings that cannot meet marketable quality will be buried within the permit area a minimum of 4 feet and a maximum of 10 below the final reclaimed surface. The disposal area will be no closer than 30 feet from any reclaimed highwalls and 100 feet from any drainage courses. After the coal stockpiles have served their useful purpose, the coal pad material that is of marketable quality will be shipped directly to the end user or offsite for further processing. Any coal pad material that can not meet marketable quality will be excavated to a point where the underlying material is uncontaminated and buried within the permit area a minimum of 4 feet and a maximum of 10 below the final reclaimed surface. The disposal area will be no closer than 30 feet from any reclaimed highwalls and 100 feet from any drainage courses.

   After placement, these materials will be covered with a minimum of 4 feet of the best available non-acid and non-toxic forming, and

non-combustible material. The surface of this cover will be crowned or sloped to prevent infiltration of surface water into the disposed material.

All non-coal waste and debris which may be accumulated at the site, including paper and wood shipping containers, empty oil containers, worn out machine parts, etc., will be placed in appropriate temporary containers or storage areas and periodically transported to an offsite disposal area which meets all Federal, State and local laws and ordinances for permanent disposal of such materials.

Attachment III-A-3

3.a) Crushing and screening of the coal to be mined will be performed utilizing a portable plant transported to the site by truck and erected on site. Regular maintenance will consist of routine lubrication, oil checking and changing as necessary, etc. and will be conducted during the period the crusher and/or screen is in use. When no longer needed the plant will be disassembled and transported offsite by trucks.

All haulage roads shall be designed to the following minimum criteria and/or prudent engineering practice for the design of haulroads, except where said haulroad is a public highway. See Part III-B-5 for primary and ancillary roads detailed design plans.

To the extent possible roads will be located on ridges or on the most stable available slopes to minimize erosion, downstream sedimentation and flooding in an effort to prevent adverse effects to fish, wildlife and related environmental values.

Prior to construction, the roadway areas shall be cleared, grubbed, and all topsoil shall be removed and stockpiled. Vegetation will not be cleared for more than the width necessary for the road and associated ditch construction.

Roads will be constructed by placing and compacting lifts of suitable subgrade material to a grade suitable for the intended use of the road. Drainage pipes will be placed in embankments or cuts as necessary to assure proper drainage. Once the desired grade of subgrade material has been attained and all drainage structures installed roads will be surfaced with available gravel, rock, chert or other suitable material as approved by the state regulatory agency sufficiently durable for the anticipated volume of traffic weight and speed of vehicles to be used. The surface will be compacted until a desirable grade and surface is attained. No toxic or acid forming substances will be used in this surface material. No sustained grade will exceed 10 percent unless deemed necessary, in which case appropriate sediment control facilities will be constructed. If grades of greater than 15 percent are required cross-over drains, ditch relief drains and road drainways will be located at a minimum of 300 foot intervals.

All roads will be constructed and maintained so as to have adequate drainage, using ditches, cross drains, and ditch relief drains. Drainage pipes will be placed in embankments or cuts as necessary to assure proper drainage and hay bale check dams and silt fences will be used at strategic locations when necessary to control sediment runoff. Natural drainage ways will not be altered unless otherwise approved by the ASMC. For stability the side slopes of the road embankments and/or cuts will be seeded with temporary and perennial type grasses and mulched to aid in preventing erosion and to enhance germination of the seed. No modifications are expected and only routine maintenance will be required to maintain the

surface of roads such as periodic grading and resurfacing. Spot seeded and mulching will take place as necessary to improve coverage of vegetation on side slopes and embankments. Haulroads will be maintained with water and/or other materials to minimize fugitive dust emissions. Maintenance of erosion control facilities will include periodic removal of sediment from structures and repairs of areas damaged due to weather, etc. Unless retention of the roads is approved for post-mining land use the following procedures will apply. When no longer needed the roadbeds will be ripped, plowed and scarified. All road surfacing materials will be removed and placed within an open pit within the permit area. The natural drainage patterns will be restored by cutting slopes and shaping to blend with the natural drainage of surrounding areas. If necessary cross drains, dikes and water bars will be constructed to minimize erosion. Terraces will be used as necessary to provide long term stability on cut and fill slopes and to minimize erosion. Road surfaces will then be revegetated according to the reclamation plan approved for this permit application, which includes planting a mixture of up to 100 lbs./acre or more of various legumes and grasses.

Coal stockpiles, if determined necessary, will be located within the permitted and bonded area such that drainage from the area will be routed through one or more of the sediment basins that are to be constructed. In general an area will be graded to a relatively level state. Upon completion of the subgrade, a relatively impervious pad or liner will be constructed to a minimum thickness of 12 inches. The pad or liner will be made of a clayey material possessing a maximum permeability coefficient of 1×10^{-6} centimeters per second. The material will be placed in 6 inch compacted lifts to 95 percent of the standard proctor density. A pad will be constructed of coal material over the relatively impervious pad or liner with material created by cleaning the coal in the pit. The only modification to the stockpile areas may be to enlarge them and this operation, if necessary, will be handled in the same manner as new construction. Small terraces and/or temporary diversions will be used as necessary to minimize surface runoff across the stockpile areas. These facilities will be maintained periodically along with the coal pad which will be maintained by grading and reshaping as necessary. After the stockpile area has served its useful purpose the pad material that can not meet market specifications will be buried within the permit area no closer than 30 feet from any remaining highwalls and 100 feet from any drainage courses and a minimum of 10 feet above the bottom of the lowest coal seam being mined and will be placed under a minimum of four feet of the best available non-acid and non-toxic forming and non-combustible material. Additional Best Management Practices (BMP’s) consisting of Sumps along with silt fences, hay bales, rock check dams will be used for sediment control of runoff from coal stockpiles prior to entering sediment basins.

See Attachment III-A-3(a), BMP Typicals.

b) There is adequate spoil room available on site and excess spoil disposal facilities are not necessary. There will be no coal processing which generates waste so no coal waste disposal facilities are necessary. Any non-coal wastes will be disposed of within an offsite disposal area which meets all Federal, State and local laws and ordinances for permanent disposal of such materials.

c) There will be no mine facilities at this site other than a portable office which will most probably be an office trailer or a converted mobile home and will be removed from the site soon after the end of the mining process. There is a possibility that during the life of the permit an equipment maintenance shop may be constructed at this site. If this decision is made the building will be located within the permitted and bonded area. Generally these buildings are constructed of sheet metal covering a wooden frame built around poles and are erected in a manner that will facilitate disassembly and relocation to another site after equipment is removed from the area. Any modification or addition to the structure would be of similar construction. Periodic maintenance including painting and winterizing will be done either by contractors or mine personnel. After mining is completed and the equipment is removed from the site, the building will be disassembled and the various structural components will be transported via truck to another location.

d) Water pollution control facilities, sediment basins, berms, hay dams, silt fences, rock check dams and drainage ditches shall be constructed prior to mine operation in a particular increment according to approved plans. These facilities will be used to control runoff from the mine and will be inspected and maintained until reclamation of the area is complete. Sediment basin construction and any subsequent modifications that may be required will be conducted under the general supervision of a qualified registered professional engineer and will be done in accordance with the approved design plans. The dam will be constructed of the best available soil material based on soil strength parameters and permeability. The dam core wall will bear on unyielding, relatively impermeable consolidated rock and the balance of the dam structure on the prepared compacted natural soil material present at the site. The dam will be built in horizontal lifts beginning at the lowest point of the foundation with each lift being thoroughly compacted. The drainage structure will be installed as outlined on the detailed design plans and shall be stabilized with respect to erosion using riprap, concrete paving, energy dissipators, vegetation or otherwise. After construction of the basin, the dam and all areas disturbed by construction will be limed, fertilized, and seeded with an appropriate mixture of grasses and legumes, then mulched.

Routine maintenance of the sediment basins will consist of spot seeding, fertilization and mulching to insure that a good vegetative cover is maintained on the dam and areas around the pond, repair and stabilization of any rills and gullies which may develop, repairs to discharge structures and erosion protection

structures as required, and removal of entrapped sediment from the basins prior to its reaching the maximum level indicated on the approved plans. All sediment basins will be inspected quarterly by the operator's personnel and annually by a registered professional engineer and any required maintenance will be completed at the earliest possible time by the operator.

All basins are proposed, no modification plans are required. If during the term of the permit basins require modifications, modification plans will be submitted to the Regulatory Authority for approval prior to any modifications. Upon modifying the basin, the basin will be certified to the Regulatory Authority.

Upon completion of mining, successful reclamation and effluent standards being met, each sediment basin not remaining as a permanent water impoundment will be dewatered in an environmentally safe manner (such as siphoning, pumping, etc.) and reclaimed to approximate original contours by the following procedure:

A permanent diversion channel (designed for a 10 yr. - 24 hr. precipitation event) shall be cut along the outer edge of the basin to re-route drainage around the basin and back through the stabilized spillway to allow for the reclamation of the sediment basin. The diversion channel shall be designed and grassed as per enclosed information. (See permanent diversion channel for basin disposal) Upon completion of the diversion channel the embankment will be breached to the existing sediment level to prevent the impoundment of water. The breach will be graded to a minimum side slope of 2.5 to 1 and revegetated and/or riprapped as to prevent erosion and ensure the stability of the exposed breach. The remaining back slope of the embankment will be graded to a minimum 3 to 1 slope. The dewatered sediment basin will be seeded with some combination of the following: Fescue, bermuda, rye grass, canary grass, and willows. After seeding the area will be mulched. Any additional sediment or embankment material not used to meet approximate original contour, if nontoxic, will be spread in thin layers within the permit area and vegetated as stated in the reclamation plan. All toxic material encountered in the basin disposal will be buried and covered with 4 feet of nontoxic and noncombustible material and vegetated a stated in the reclamation plan.

6. Give a description, including appropriate cross-sections and maps, of measures to be used to seal or manage mine openings, bore holes, wells and other openings within the proposed permit area. (780.18, 816.13-816.15)

Bore holes, wells, and other openings will be backfilled with cuttings from the holes and capped with clay or other impervious material. Abandoned monitoring wells will be sealed with a concrete cap which is approximately 2' x 2' x 0.5'. See Attachment III-A-6 for typical illustrations of methods to be used to seal and/or manage bore holes and wells.

Any abandoned plugged and unplugged gas and oil wells found during mining of the old works will be sealed as outlined by the Alabama Oil and Gas Board after all coal is removed from the vicinity of the well.

Plugged and abandoned wells will be squared up and a device will be used to detect the presence of gas. If gas is present, the area of flow will be sealed by placing concrete/grout or sacrete to a depth of 25 feet and a 3/8 inch steel plate welded across all casing stubs. If gas is not present, a 3/8" inch steel plate will be welded across all casing stubs. A written report of the resealing process used on each plugged and abandoned well will be submitted to the ASMC and Alabama Oil and Gas Board within 30 days.

Unplugged wells will be temporarily sealed and restored by the following process: the owner of the well will submit a temporary abandonment and restoration plan to the Alabama Oil and Gas Board for approval. The well will be sealed for temporary abandonment prior to mining through and restored in accordance with the approved plan to the Alabama Oil and Gas Board.

Underground mine openings within the lowest coal seam to be mined will be eliminated by backfilling the openings with a clay material having a permeability ranging from 0.00001 to 0.000001 cm/sec. The clay material will be placed in horizontal lifts not to exceed six inches and compacted to 95% of the standard proctor. The clay material will be placed to a minimum height of five feet above the top of the underground mine opening. Upon the completion of the sealing operations the open pit will be backfilled and reclaimed in accordance with the reclamation plan. See Attachment III-A-6 for typical illustration of methods to be used to seal underground mine openings within the lowest coal seam to be mined.

7. Give a description of steps to be taken to comply with applicable water quality laws, regulations and health and safety standards. (780.18)

Surface runoff will be routed through sediment control basins prior to being discharged from the permit area. Discharges from sediment basins will be monitored by in-house personnel or consultants, at the discretion of the Permittee, as necessary to assure compliance

with applicable State and Federal Laws and Regulations. Chemical treatment with aqueous sodium hydroxide solution will be used on water entering the drainage course of the existing basins if this is determined necessary to achieve compliance with State and Federal Laws. On occasion, a solution of chemically hydrated lime and water will be used in sediment basins for immediate correction of pH imbalances. With proper pH, the heavy metals will precipitate to the bottom of the basins and will not exit the discharge pipe or spillway. Alum may be used on occasion if necessary to facilitate flocculation and precipitation of suspended solids. A permit to discharge under the National Pollutant Discharge Elimination System has been applied for and discharges from the proposed basins will be monitored and results of that monitoring, both compliant and non-compliant, will be reported in accordance with the NPDES Permit and the hydrologic monitoring plan shown elsewhere in this permit application. A trained and qualified health and safety staff will be contracted to assure that all health and safety standards and MSHA regulations are complied with. Certification and training of all mine personnel will be current and will be updated as necessary by attending MSHA classes taught by certified personnel. All dust, noise and other required control tests will be current and will be performed as necessary by certified MSHA personnel. Records of all testing required will be kept at the mine and will be available for inspection by the Regulatory Authority. All necessary permits for field absorption systems for the office and similar facilities will be obtained prior to construction of these facilities. Haul roads will be maintained with water and/or other materials to minimize fugitive dust emissions.

8. Is surface mining to be conducted within 500 feet of an underground mine? (780.27, 816.79) ( ) Yes (X) No

If yes, describe measures to be used to comply with Section 816.79. Attach a map showing the location and extent of known workings in accordance with 780.14(a)(13). Attach a copy of MSHA approval.

B. Engineering Plans

All cross-sections, maps and plans related to operations, reclamation and structures must comply with Section 780.10. Plans, appropriate calculations and conclusions shall be presented in a clear and logical sequence and shall take into account all applicable factors necessary to evaluate the proposed plan or design.

1. Existing Structures. (780.12, 786.21)

(a) Describe each existing structure to be used, its location, current condition, approximate dates of construction and evidence (including relevant monitoring data) showing whether or not the structure meets the performance standards of Subchapter K or Subchapter B, whichever is more stringent and demonstrate whether or not the use of existing structures will pose a significant harm to the environment or public health or safety.

Not applicable

(b) If an existing structure requires modification or reconstruction to meet the performance standards, attach a compliance plan which includes design specifications, construction schedule, monitoring procedures, and evidence that the risk of harm to the environment or public health or safety is not significant during modification or reconstruction.

2. Ponds, impoundments, banks, dams and embankments. (780.25)

(a) Submit a general plan which complies with Section 780.25(a)(1) for each proposed sedimentation pond, water impoundment, and coal processing waste bank, dam or embankment to be located within the proposed permit area.
See attachment III-B.-2.A

(b) Submit detailed design plans which comply with Sections 780.25(a)(2 and 3) and 816.46 for each sedimentation pond to be constructed on the increment you currently propose to mine. If the sediment pond is to remain as a permanent water impoundment, design plans shall also comply with Section 816.49.
See attachment III-B.-2.A

(c) Submit detailed design plans which comply with Sections 780.25(a)(2 and 3) and 816.49 for each temporary or permanent water impoundment to be constructed on the increment you currently propose to mine.
See attachment III-B.-2.A

(d) Submit detailed design plans which comply with Sections 780.25(a) (2 and 3) and 816.81-816.85 for each coal processing waste bank to be constructed on the increment you currently propose to mine.
None proposed.

(e) Submit detailed design plans which comply with Sections 780.25(a)(2 and 3) and 816.91-816.93 for each coal processing waste dam and embankment to be constructed on the increment which you currently propose to mine.
None proposed.

Applicant: Ridgeholm Energy Partners, LLC
Mine Name: John Poe Mine
Permit Number: P-3981

CERTIFICATION STATEMENT:

I hereby certify that Attachment III-B.-2.A prepared for Ridgeholm Energy Partners, LLC, John Poe Mine, are in accordance with the Regulations of the Alabama Surface Mining Commission as adopted by Act 81-435 of December 18, 1981 and amended to date, and are true and correct to the best of my knowledge, information and belief.

Leslie G. Stephens

Leslie G. Stephens, P.L.S.,P.E.
AL. Registration No. 14117-E

05/04/2015
Date

ALABAMA
PROFESSIONAL ENGINEER
REGISTERED
No. 14117
PROFESSIONAL LAND SURVEYOR
LESLIE G. STEPHENS

GENERAL PLAN

The general plan consists of constructing two (2) proposed basins, Basins 001P and 004P for the life of the mine. Basin 004P will be constructed in two Phases as described below. Detailed Design Plans for the basins will be submitted to the regulatory authority and upon written approval from them will be constructed and certified to the Regulatory Authority prior to disturbance in their drainage areas. General design data is enclosed. All basins are to be Permanent Impoundments, Fish & Wildlife Habitat. (See attached data and watershed map for basin location and preliminary hydrologic information).

Basin 001P will be constructed and certified to the regulatory authority prior to mining within Increment No. 1. Diversion A-A′ will also be constructed along the South Boundary of Increment No. 1 to Route rainfall run-off into Basin 001P prior to leaving the Permit Boundary. See Attachment III-B-3 for the Detailed Design Plans of Diversion A-A′. The Diversion will be constructed prior to mining disturbance within the Watershed of Diversion A-A′.

Basin 001P spillway system will consist of a concrete lined open channel spillway with a skimmer board to insure sub-surface withdrawal that will discharge onto a concrete splash pad.

See Attachment III-b-2(a) for Detailed Design Plans.

The typical diversion ditches shown on the watershed map and permit map for Increment No. 1 will be constructed prior to mining in the watershed of the diversion ditch. See Attachment III-B-3 for diversion ditch typicals and specifications.

Basin 004P will be constructed and certified to the regulatory authority prior to mining commencing within Increment No. 2. in two Phases. The coal seam does not outcrop in Increment No. 2 therefore the construction of Basin 004 Phase I will involve the construction of the embankment and spillway system with a sump area upstream of the embankment for erosion control during construction of the normal pool area Phase II. The sump sediment volume will be sized as per the acres anticipated to be disturbed during the construction of Phase II. Following construction of the Embankment,

spillway system and sump Phase I it will be certified to the regulatory authority. Any coal encountered during construction of the normal pool Phase II will be removed during construction. Material excavated from the normal pool area Phase II will be placed in Temporary Spoil Fill No. 1 in four(4) feet lifts compacted to 90% Standard Proctor Density so as to establish 2.5 horz. To 1 vert. out slopes of the spoil material and in a manner such that the drainage will run back into the sump or normal pool area and no closer than 100 feet from the normal pool area 004P Phase II. The Temporary Spoil Fill No.1 will be mined through as mining progresses West, through that disposal area, and spoil will be placed in previous mine cuts. (See Operations Map for Temporary Spoil Fill No. 1 Location). The normal pool area of Basin 004P Phase II will be sloped and lined, up to the normal pool elevation, with 1.0 foot of clay material to minimize infiltration and to provide a stable pool level with the clay placed in 6” lifts compacted to 95% of the standard proctor density. With the completion of the normal pool area of Basin 004P Phase II it will be certified to the regulatory authority.

Geologic investigations of the area indicate layers of sandstone, siltstone, shale and minor amounts of bituminous coal and underclay. The coal to be mined by Ridgeholm Energy Partners, LLC, will be confined to the Upper Cliff Coal Seams. The strata in the area is characterized by small scale normal faulting and gentle open folding.

All diversions are to be temporary and will be re-graded and revegetated. (See Attachment III-B-3 for diversion ditch criteria).

Surface drainage from Basin 001P will flow to an Un-named Tributary to Town Creek. Surface drainage from Basin 004P will flow to an Un-named Tributary to Biddle Spring Branch. Biddle Spring Branch flows into Town Creek approximately 1500' South of Basin 004P.

No existing or proposed underground mines are known to exist within 500' of the permit boundary.

See Attachment III-B-2(a), Watershed Map,

See Attachment III-B-3 Diversion A-A’ Detailed Design Plans

See Attachment III-B-2(a), Basin 001 Detailed Design Plans

Applicant: Ridgeholm Energy Partners, LLC
Mine Name: John Poe Mine
Permit Number: P-3981

Attachment III-B-2-A

Basin No.	Location	Drainage Area (Acres)
001P	North ½ of SE 1/4 of NW 1/4 & NE 1/4 of NW 1/4	81.4
004P	SE 1/4 of NE 1/4	64

All within Section 29, Township 5 South, Range 9 East, DeKalb County, Alabama, as shown by the Dugout Valley 7.5 Minute United States Geological Survey Quadrangle Map.

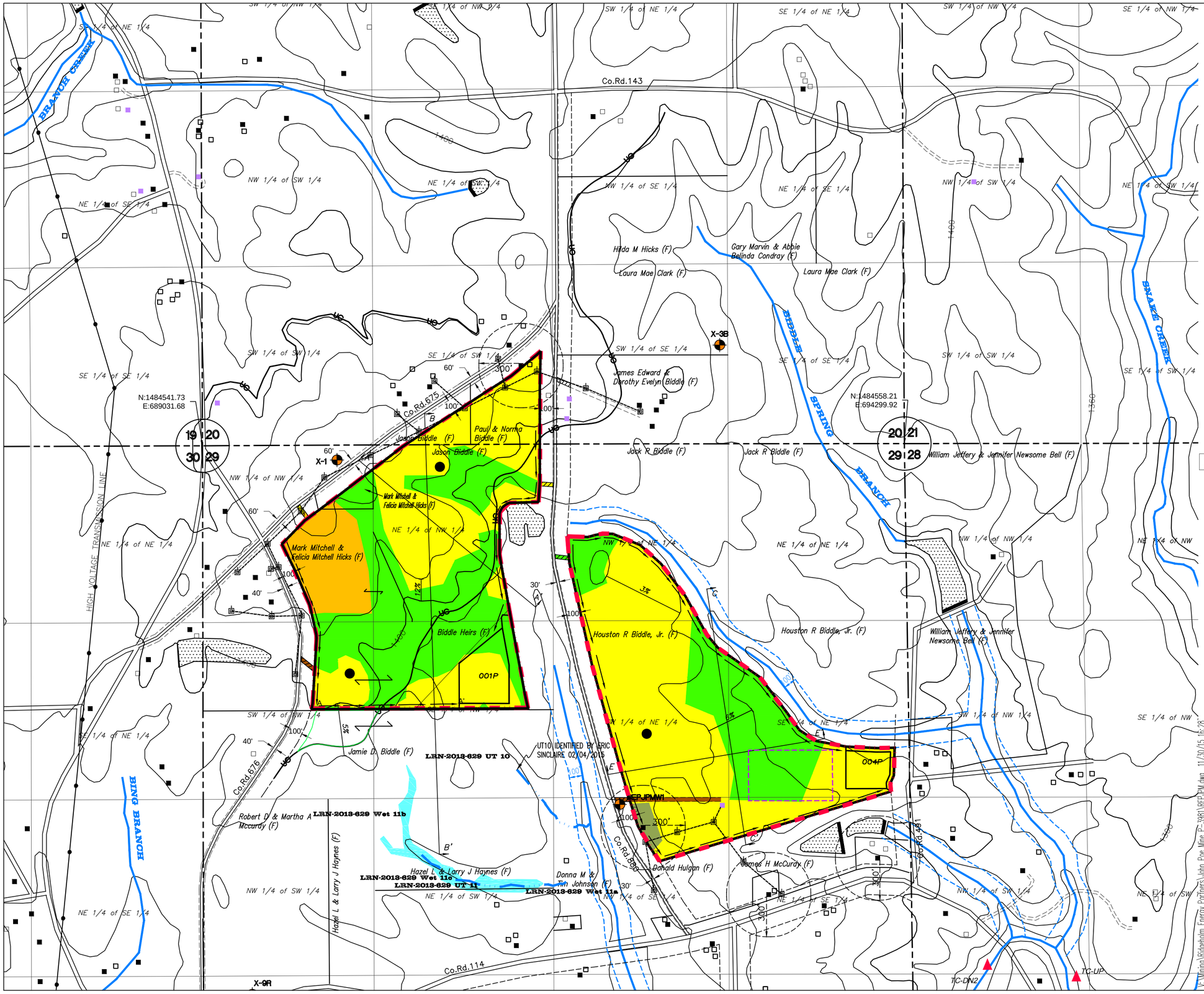

LEGEND

- Permit Boundary
- Previously Surface Mined by Others
- Occupied Dwelling
- Unoccupied Dwelling
- Out Buliding (Barn, Garage, Etc.)
- 700 Surface Contour
- 001P Sediment Basin
- Perennial Stream
- 100' Stream Offset
- Intermittent Stream
- Natural Drainage Course
- County Road (Paved unless otherwise designated)
- County Road Right of Way
- Temporary Spoil Fill No. 1
- Road (Private unless otherwise shown)
- Primary Road
- Ancillary Road
- Impounded Water
- Property Line other than Forty Line
- Land Hook
- 100' Setback from Road
- UC Upper Cliff Coal Outcrop
- Diversion Ditch
- Coal Stockpile, Location Subject to Change

LANDUSE AND CURVE NUMBER INFORMATION

- Unmanaged Timberland, Curve Number 70
- Pasture, Curve Number, 74
- Cropland, Curve Number, 81
- Residential, Curve Number, 74
- Gravel, Curve Number, 95
- Watershed Boundary

PERC ENGINEERING CO., INC.
1606 Hwy. 78 West Jasper, AL 35501/P.O. Box 1712–35502
(205) 384–5553 Office (205) 295–3114 Fax

RIDGEHOLM ENERGY PARTNERS, LLC.
JOHN POE MINE / P-3981
ATTACHMENT III-B-2(a)
Watershed Map

.DWG NAME:	REPJPM Watershed	DATE:	11–30–2015
DRAWN BY:	S.A.E.	SCALE:	1"=500'
APPROVED BY:	L.G.S.	JOB NUMBER:	15–04482–002

Y:\Mining\Ridgeholm Energy Partners\John Poe Mine\P-3981\REPJPM.dwg 11/30/15 16:28

ADEM
Alabama Department of Environmental Management

NATIONAL POLLUTANT DISCHARGE ELIMINATION SYSTEM INDIVIDUAL PERMIT

PERMITTEE: Ridgeholm Energy Partners, LLC
100 Oxmoore Road, Suite 110
Birmingham, AL 35209

FACILITY LOCATION: John Poe Mine
3802 County Road 85
Fort Payne, AL 35968
DeKalb County
T5S, R9E, S20, S29, and S32
T6S, R9E, S5

PERMIT NUMBER: AL0082252

DSN	RECEIVING STREAM	DSN	RECEIVING STREAM
001-1	Unnamed Tributary to Town Creek	002-1	Biddle Spring Branch
003-1	Unnamed Tributary to Biddle Spring Branch	004-1	Unnamed Tributary to Biddle Spring Branch
005-1	Unnamed Tributary to Town Creek	006-1	Unnamed Tributary to Town Creek
007-1	Unnamed Tributary to Town Creek	008-1	Unnamed Tributary to Town Creek
009-1	Town Creek	010-1	Unnamed Tributary to Town Creek

In accordance with and subject to the provisions of the Federal Water Pollution Control Act, as amended, 33 U.S.C. §§1251-1378 (the "FWPCA"), the Alabama Water Pollution Control Act, as amended, Code of Alabama 1975, §§ 22-22-1 to 22-22-14 (the "AWPCA"), the Alabama Environmental Management Act, as amended, Code of Alabama 1975, §§22-22A-1 to 22-22A-16, and rules and regulations adopted thereunder, and subject further to the terms and conditions set forth in this permit, the Permittee is hereby authorized to discharge into the above-named receiving waters.

ISSUANCE DATE: February 6, 2015

EFFECTIVE DATE: February 6, 2015

EXPIRATION DATE: February 5, 2020

Glenda L. Read
Alabama Department of Environmental Management

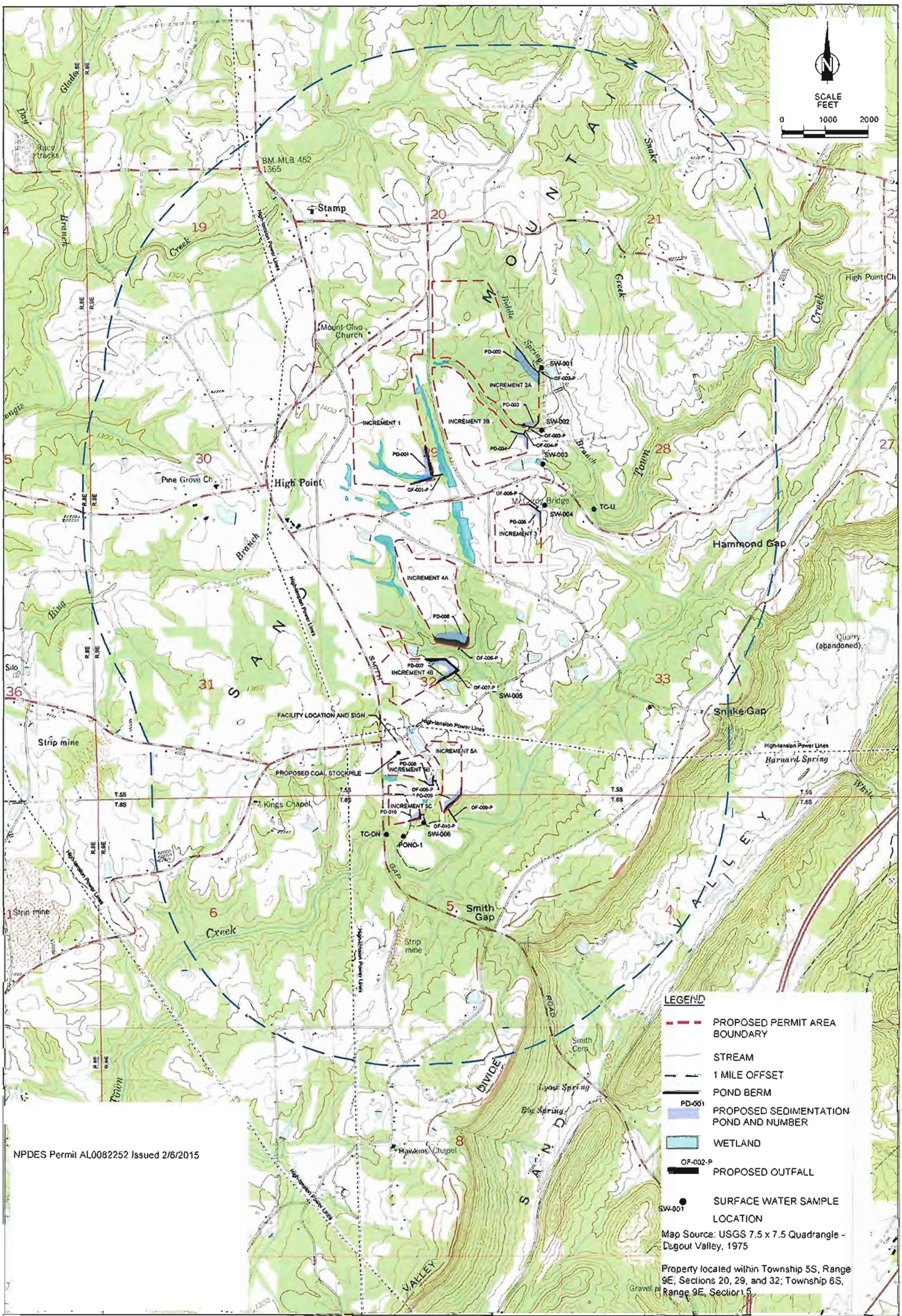

Ridgeholm Energy Partners, LLC
100 Oxmoore Road, Suite 110
Birmingham, Alabama 35209

PROJ. NO: 02.20120185.00

EARTHCON®
EarthCon Consultants Inc.
14005 Walters Rd, Suite 700
Houston, TX 77014

NPDES PERMIT MAP
John Poe Mine
Dekalb County, Alabama

DRAWN:	CHECKED:	DATE:	FIGURE:
JMT	RAO	05/14/14	1

Applicant: Ridgeholm Energy Partners, LLC
Mine Name: John Poe Mine
Permit Number: P-3981

Attachment III-B-2-A

Pond Construction Criteria

The embankment for sediment basins (temporary and permanent) shall be designed and built using the following as minimum criteria:

1. The top of the dam shall be no less than 12 feet wide.

2. See design sheet for maximum and minimum embankment slopes.

3. The foundation and abutments for the impounding structure shall be designed to be stable under all conditions of construction and operation of the impoundments, with a minimum static safety factor of 1.5 for the normal pool with steady seepage saturation conditions, and a seismic safety factor of at least 1.20.

4. The dam shall be constructed with a cutoff trench based upon prudent engineering practices for the site. The cutoff shall be located on the dam centerline and be of sufficient depth to extend into a relatively impervious material from which the core of the dam shall also be constructed.

5. The embankment foundation area shall be cleared of all organic matter, all surfaces sloped to no steeper than lv:lh, and the entire foundation surface scarified.

6. The entire embankment and cutoff trench shall be compacted to 95 percent density, based on standard proctor as outlined in ASTM.

7. The material placed in the embankment shall be free of sod, roots, stones over 6 inches in diameter, and other objectionable materials. The fill material shall be placed and spread over the entire fill area, starting at the lowest point of the foundation, in layers not to exceed 12 inches in thickness. Construction of the fill shall be undertaken only at such times that the moisture content of the fill material will permit satisfactory compaction in accordance with paragraph 5.

8. The pool area of the basin will be cleared of timber and large undergrowth.

9. The primary decant system when consisting of a pipe shall be installed according to Class C pipe installation for embankment bedding.

10. The primary decant system shall be equipped with a device, or constructed, such as to insure that subsurface withdrawal is accomplished to prevent discharge of floating solids. If a channel is used as the primary decant a skimmer shall be installed to prevent floating solids from discharging.

11. A splash pad or riprap may be required under the discharge of the primary decant system where necessary to insure that the discharge does not erode the embankment.

12. The combination primary and secondary decant system shall be designed to safely carry the expected peak flow from a 25 year - 6 hour storm. The entire emergency overflow spillway channel will be a stabilized channel and will be stabilized upon completion of construction as specified within the detailed design plans using prudent engineering measures. These measures may consist of lining the spillway with concrete or a durable rock riprap, or the spillway being constructed in consolidated non-erodible material and planted with a mixture or both annual and perennial grasses, or a combination of any or all of the above.

13. Sediment basins using a single spillway system shall be an open channel of non-erodible construction consisting of concrete, durable rock riprap or its being constructed in consolidated non-erodible material as specified in the detailed design plans.

14. The settled embankment for temporary impoundments shall be a minimum of 1.0 foot above the maximum water elevation for the runoff from a 25 year - 6 hour, or a 10 year - 24 hour precipitation event (whichever has the greatest runoff). The settled embankment for permanent impoundments shall be a minimum of 1.0 foot above the maximum water elevation for the runoff from a 25 year - 6 hour, or a 10 year - 24 hour precipitation event (whichever has the greatest runoff).

15. If basins are built in series, then the combined decant system for each shall be designed to accommodate the entire contributing drainage area.

16. The dam and all disturbed areas shall be seeded with both perennial and annual grasses, fertilized and mulched in order to insure erosion is minimized. Hay bales or riprap may be placed at the toe of the dam immediately upon completion of construction.

17. The constructed height of the dam shall be increased a minimum of 5 percent over the design height to allow for settlement over the life of the embankment.

18. Final graded slopes of the entire permanent water impoundment area shall not exceed 2.5H-1.0V to provide for adequate safety and access for proposed water users.

19. Prior to Phase II bond release, additional data concerning water quality, water quantity, depth, size, configuration, postmining land use, etc., for each proposed permanent water impoundment, shall be submitted to the Regulatory Authority for permanent water impoundment approval.

20. All sediment basins will be inspected for stability, erosion, etc. two (2) times a month until removal of the structure or release of the reclamation bond.

21. The embankment and spillway will be maintained by repairing any damage such as erosion, slope failure or spillway damage until removal of the structure or release of the performance bond.

22. All ponds shall be examined quarterly for structural weakness, instability, erosion, or other hazardous conditions and maintenance performed as necessary. Formal inspections shall be made on an annual basis, including any reports or modifications, in accordance with 880-X-10C-.20[l(j)] of the Alabama Surface Mining Commission Regulations.

23. Sediment will be removed from each pond when the accumulated sediment reaches the sediment storage volume as shown on the detailed design sheet.

24. Upon completion of mining, successful reclamation and effluent standards being met, each sediment basin not remaining as a permanent water impoundment will be dewatered in an environmentally safe manner (such as siphoning, pumping, etc.) and reclaimed to approximate original contours by the following procedure: A permanent diversion channel (designed for a 10 year - 24 hour precipitation event) shall be cut along the outer edge of the basin to re-route drainage around the basin and back through the stabilized spillway to allow reclamation of the sediment basin. The diversion channel shall be designed and grassed as per enclosed information. (See permanent diversion for basin disposal).Upon completion of the diversion channel the back slope of the dam shall be graded to a minimum 3H to 1V slope. The dewatered sediment basin area shall be seeded with some combination of the following: Fescue, bermuda, rye grass, canary grass and willows. After seeding the area shall be mulched. Any additional sediment or embankment material not used to meet original contour, if non-toxic, shall be spread in thin layers within the permit area and vegetated as stated in the approved reclamation plan. All toxic material encountered in the basin disposal shall be buried and covered with 4 feet of non-toxic material and vegetated as stated in the approved reclamation plan.

25. A qualified registered professional engineer or other qualified professional specialist, under the direction of the professional engineer shall conduct regular inspections during construction and upon completion shall inspect each basin for certification purposes.

26. Point source discharge embankments shall be constructed and abutments keyed into desirable material if at all possible. In the event that undesirable material is encountered, addition design and construction criteria shall be submitted prior to certification.

PERC ENGINEERING CO., INC.

Telephone: (205) 384-5553
Facsimile: (205) 295-3114 - Main Building
(205) 295-3115 - Water Lab
Web Address: www.percengineering.com

November 19, 2015

Mr. Michael Bergh
Environmental Engineering Specialist
Mining and Natural Resources Section
Alabama Department of Environmental Management
P.O. Box 301463
Montgomery, AL 36130-1463

RE: Ridgeholm Energy Partners LLC
John Poe Mine
AL0082252

Dear Michael:

Due to the inability of Ridgeholm Energy Partners LLC to lease the Jamie Biddle Property where Outfall 001P is currently Permitted please accept this as our formal request to relocate Outfall 001P to the North approximately 1500' as shown on the attached Map. I have also included the pages in the application to reflect those changes. We have made a request to the ASMC to make this change in their Permit also by deleting the Jamie Biddle Property from their Permit. Please process as necessary. ASMC will want a letter or e-mail from you to confirm your approval.

If you should have questions or require additional information please feel free to call me at 205-295-3127 or e-mail lstephens@percengineering.com

Sincerely,

Leslie G. Stephens, P.E. & P.L.S.
For Ridgeholm Energy Partners LLC

XVII. RECEIVING WATERS

List the requested permit Action for each outfall (issue, reissue, add, delete, move, etc.), Outfall Designation including noting "E" for existing and "P" for proposed, name of receiving water(s), if the stream is included in a TMDL, latitude and longitude (to seconds) of location(s) that run-off enters the receiving water, distance of receiving water from outfall in feet, number of disturbed acres, the number of drainage acres which will drain through each treatment system, outfall, or BMP, and if the outfall discharges to an ADEM listed CWA Section 303(d) waterbody segment at the time of application submittal.

Action	Outfall E/P	Receiving Water	Included in TMD	Latitude	Longitude	Distance to Rec. Water	Disturbed Acres	Drainage Acres	303(d) Segment (Y/N)
Reloc	001P	U.T. to Town Creek	Y	34-34'-32.7"	85-42'-58.9"	290'	75.3	81.4	N

*If a TMDL Compliance Schedule is requested the following should be attached as supporting documentation:
(1) Justification for the requested Compliance Schedule (e.g. time for design and installation of control equipment, etc.); (2) Monitoring results for the pollutant(s) of concern which have not previously been submitted to the Department (sample collection dates, analytical results (mass and concentration), methods utilized, MDL/ML, etc. should be reported as available); (3) Requested interim limitations, if applicable; (4) Date of final compliance with the TMDL limitations; and (5) Any other additional information available to support the requested compliance schedule.

XIX. DISCHARGE STRUCTURE DESCRIPTION AND POLLUTANT SOURCE

If a modified EPA Form 2C is not attached, the applicant is required to detail existing and proposed point source(s) covered by this permit application. Specify outfall number(s) as it appears on the map(s) required by this application [if this application is for a modification to an existing permit do not change the numbering sequence of the permitted outfalls], describe each, e.g. pipe, spillway, channel, tunnel, conduit, well, discrete fissure, or container, and identify the origin of pollutants. The response must be precise for each outfall. If the discharge of pollutants from any outfall is the result of commingling of waste streams from different origins, each origin must be completely described. Please check all responses which describe the discharge origin.

Outfall	Discharge structure Description	Description of Origin Of pollutants	Surface Discharge	Groundwater Discharge	Wet Prep -Other Production Plant	Pumped or Controlled Discharge	Low Volume STP	Other
001P Relo.	Pipe Or Channel	2,9	Yes	No	No	No	None	NA

Origin of Pollutants – typical examples: **(1)** Discharge of drainage from the underground workings of an underground coal mine, **(2)** Discharge of drainage from a coal surface mine, **(3)** Discharge of drainage from a coal preparation plant and associated areas, **(4)** Discharge of process wastewater from a gravel-washing plant, **(5)** Discharge of wastewater from an existing source coal preparation plant, **(6)** Discharge of drainage from a sand and gravel pit, **(7)** Pumped discharge from a limestone quarry, **(8)** Controlled surface mine drainage (pumped or siphoned), **(9)** Discharge of drainage from mine reclamation, **(10) Other**: _____.

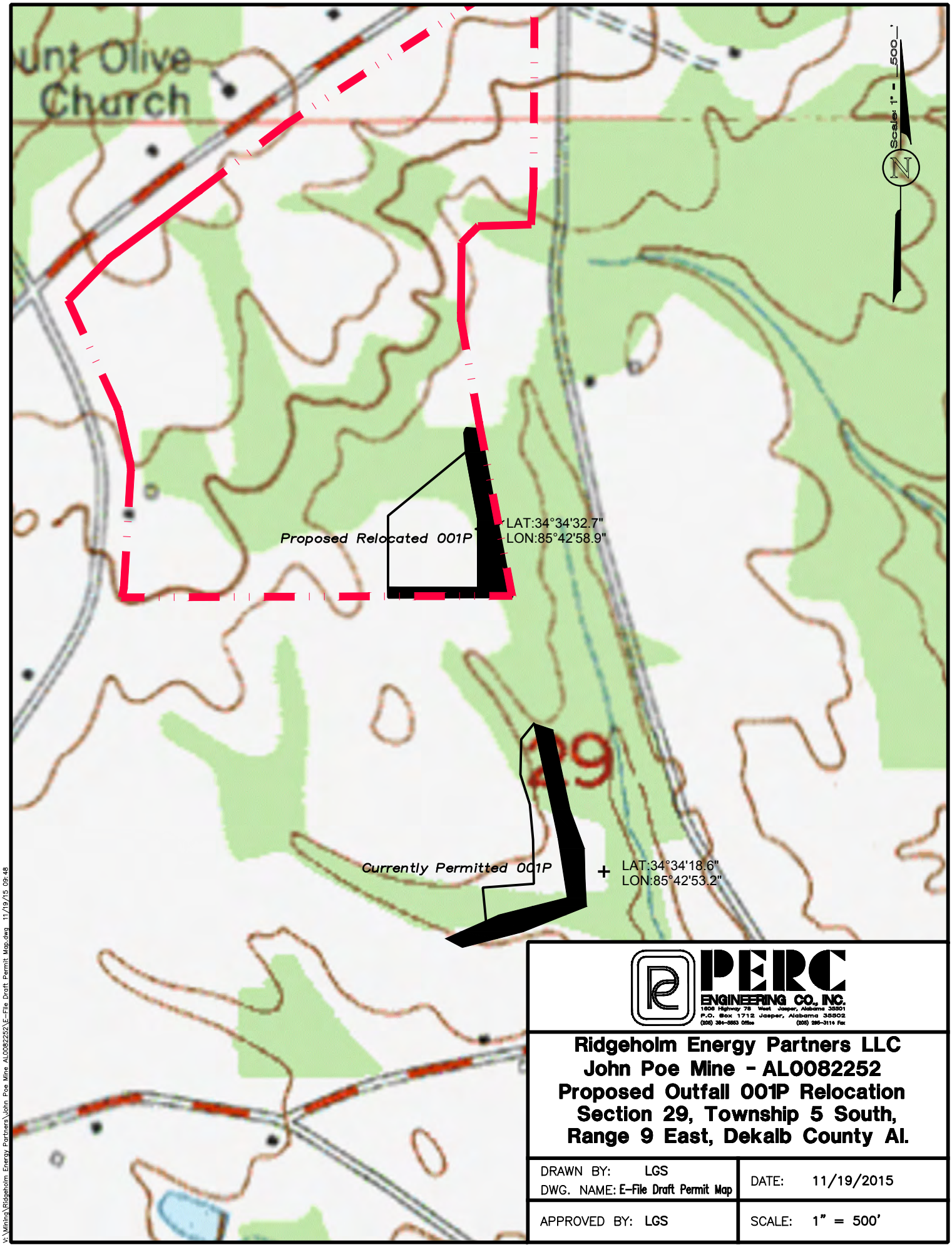

PERC ENGINEERING CO., INC.
1606 Highway 78 West Jasper, Alabama 35501
P.O. Box 1712 Jasper, Alabama 35502
(205) 384-5853 Office (205) 295-3116 Fax

Ridgeholm Energy Partners LLC
John Poe Mine - AL0082252
Proposed Outfall 001P Relocation
Section 29, Township 5 South,
Range 9 East, Dekalb County Al.

DRAWN BY: LGS DWG. NAME: E-File Draft Permit Map	DATE: 11/19/2015
APPROVED BY: LGS	SCALE: 1" = 500'

V:\Mining\Ridgeholm Energy Partners\John Poe Mine AL0082252\E-File Draft Permit Map.dwg 11/19/15 09:48

LANCE R. LEFLEUR
DIRECTOR

ADEM

ROBERT J. BENTLEY
GOVERNOR

Alabama Department of Environmental Management
adem.alabama.gov
1400 Coliseum Blvd. 36110-2400 • Post Office Box 301463
Montgomery, Alabama 36130-1463
(334) 271-7700 • FAX (334) 271-7950

NOV 24 2015

Samuel Magruder
Managing Partner
Ridgeholm Energy Partners, LLC
4339 Cezar Chavez
San Francisco, California 94131

RE: **Outfall 001P Relocation Request**
John Poe Mine
NPDES Permit No. AL0082252
DeKalb County (049)

Dear Mr. Magruder:

The Alabama Department of Environmental Management has received the Outfall Relocation Request letter submitted by PERC Engineering Co., Inc. on behalf of Ridgeholm Energy Partners, LLC. The Department recorded the document as being received, via email, on November 19, 2015.

Outfall	Current Location	New Location
001P	Latitude N 34° 34' 18.6" Longitude W -85° 42' 53.2"	Latitude N 34° 34' 32.7" Longitude W -85° 42' 58.9"

The Department has reviewed the document and has determined that relocation of Outfall 001P does not require a modification of the NPDES Permit. Therefore, the request is approved.

If you have any questions regarding this matter, you may contact Michael T. Bergh at 334-274-4238 or mtbergh@adem.state.al.us.

Sincerely,

Jeffery W. Kitchens, Chief
Stormwater Management Branch
Water Division

JWK/mtb File: BASF/15099

cc: Catherine McNeill, ADEM
Michael T. Bergh, ADEM
Leslie Stephens, PERC

PERC
ENGINEERING CO., INC.

Telephone: (205) 384-5553
Facsimile: (205) 295-3114 - Main Building
(205) 295-3115 - Water Lab
Web Address: www.percengineering.com

November 19, 2015

Mr. Michael Bergh
Environmental Engineering Specialist
Mining and Natural Resources Section
Alabama Department of Environmental Management
P.O. Box 301463
Montgomery, AL 36130-1463

RE: Ridgeholm Energy Partners LLC
John Poe Mine
AL0082252

Dear Michael:

Due to the inability of Ridgeholm Energy Partners LLC to lease the Jamie Biddle Property where Outfall 001P is currently Permitted please accept this as our formal request to relocate Outfall 001P to the North approximately 1500' as shown on the attached Map. I have also included the pages in the application to reflect those changes. We have made a request to the ASMC to make this change in their Permit also by deleting the Jamie Biddle Property from their Permit. Please process as necessary. ASMC will want a letter or e-mail from you to confirm your approval.

If you should have questions or require additional information please feel free to call me at 205-295-3127 or e-mail lstephens@percengineering.com

Sincerely,

Leslie G. Stephens, P.E. & P.L.S.
For Ridgeholm Energy Partners LLC

Bergh, Michael T

From: Leslie Stephens [lstephens@percengineering.com]
Sent: Thursday, November 19, 2015 12:57 PM
To: Bergh, Michael T
Subject: Re: John Poe Mine AL0082252
Attachments: AL0082252 Relocation Request for 001P Reduced.pdf

Michael

Please see attached request as we discussed.

Thank you

Leslie Stephens, P.L.S. & P.E.
PERC Engineering Co., Inc.
P.O. Box 1712
Jasper, Al 35502
Office 205-295-3127
Cell 205-385-3445

On Wed, Sep 30, 2015 at 7:57 AM, Bergh, Michael T <mtbergh@adem.state.al.us> wrote:

Leslie,

If you would, send a formal letter requesting the change with the current lat/long of outfall 001 and the new proposed lat/long for outfall 001, receiving streams, drainage areas, expected discharge flows from the basin if changed, and a map dictating where the old basin/proposed basin are in relation to one another. Additionally, change the permit boundary if necessary for Increment 1 which I assume will approximately be where your note is.

Currently I don't see a problem with moving it based on what I think the new map and information will look like but I just want to double check everything. I think we can do it with a formal letter request rather than a permit mod but I'll reevaluate it all once I get all the info.

Let me know if you have any questions.

Thanks

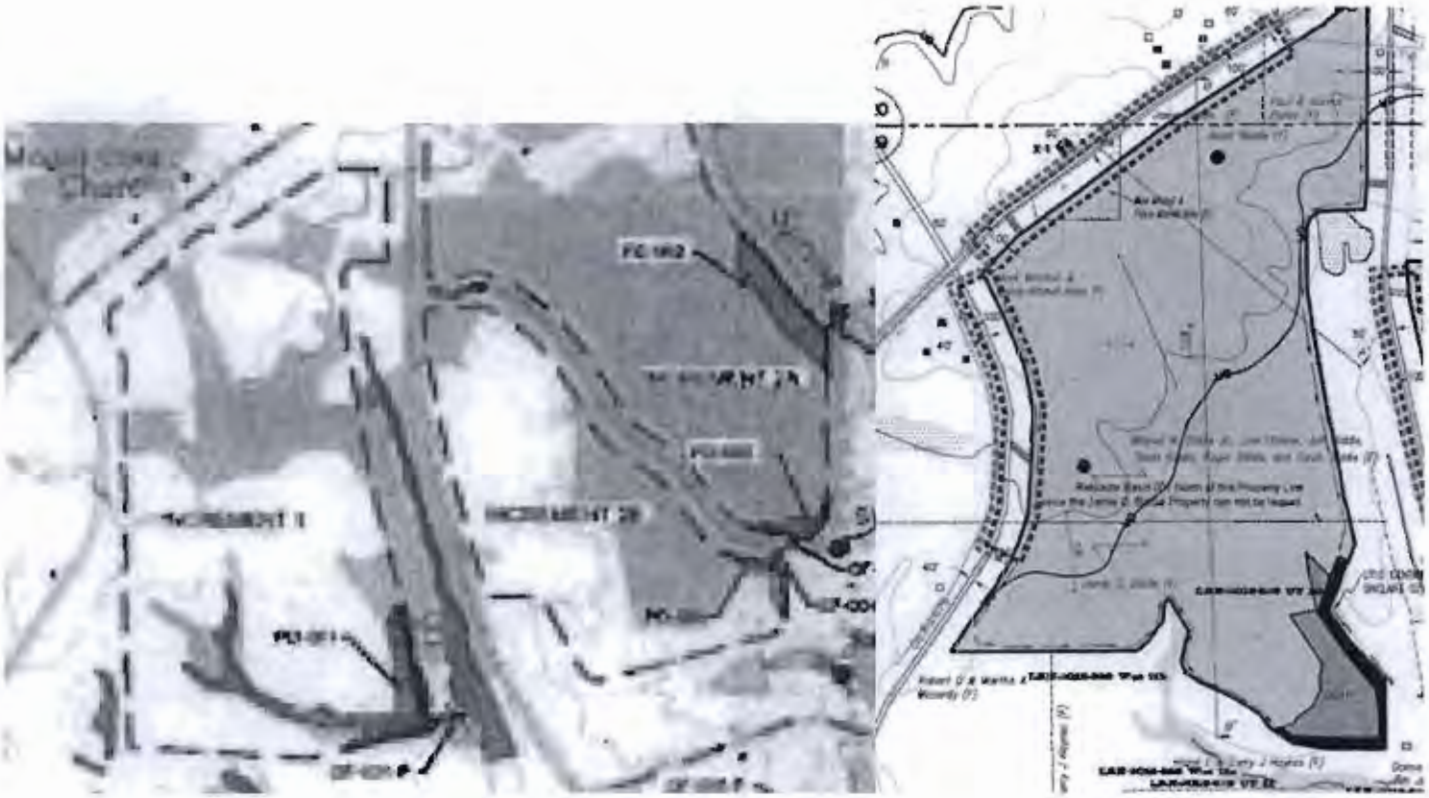

Michael T. Bergh

Environmental Engineering Specialist

Water Division; Stormwater Management Branch

Alabama Department of Environmental Management

Office: (334) 274-4238

adem.alabama.gov

Email: mtbergh@adem.state.al.us

ADEM

Did you know you can submit your DMRs online using our newly enhanced E2 DMR Reporting System? To sign up and learn more, please visit the Department's E2 Reporting System webpage here.

From: Leslie Stephens [mailto:lstephens@percengineering.com]
Sent: Tuesday, September 29, 2015 2:19 PM
To: Bergh, Michael T
Subject: John Poe Mine AL0082252

Michael

I got your message on the phone thought I would send a map for you to look at.

The Jamie D. Bittle property can not be leased so I wanted to see if it was possible to send in new information on Outfall 001P and relocate it North of the property line or would we be required to submit a modification. It is in the SE 1/4 of NW 1/4 of Section 29 See attached ASMC Map.

The receiving stream will be the same and the drainage area will be smaller.

Please tell me what is required the owner wants to know what it will take.

Thank you

Leslie Stephens, P.L.S. & P.E.

PERC Engineering Co., Inc.

P.O. Box 1712

Jasper, Al 35502

Office 205-295-3127

Cell 205-385-3445

HYDROLOGY STUDY FOR
RIDGEHOLM ENERGY PARTNERS, LLC

JOHN POE MINE

P- 3981

DEKALB COUNTY, ALABAMA

BY

PERC ENGINEERING CO., INC.

P.O. BOX 1712

JASPER, ALABAMA 35502

DETAILED DESIGN PLANS

BASIN 001

ATTACHMENT III-B-2(a)

NOVEMBER 18, 2015

PERC ENGINEERING CO., INC.

Telephone: (205) 384-5553
Facsimile: (205) 295-3114 - Main Building
(205) 295-3115 - Water Lab
Web Address: www.percengineering.com

November 18, 2015

Mr. Stephen Miles, P.E.
Alabama Surface Mining Commission
Post Office Box 2390
Jasper, Alabama 35502-2390

RE: Ridgeholm Energy Partners, LLC
John Poe Mine
P-3981

Dear Stephen:

I hereby certify the attached Detailed Design Plans for Basin 001 for the above referenced mine are in accordance with the Regulations of the Alabama Surface Mining Commission as adopted by Act 81-435 of December 18, 1981 and amended to date, and are true and correct to the best of my knowledge, information and belief.

If you have any questions or required additional information, please feel free to call at 205-295-3127 or e-mail lstephens@percengineering.com

Sincerely,
PERC Engineering Co., Inc.

Leslie G. Stephens, P.E. & P.L.S.
AL. REG. NO. 14117-E

ALABAMA PROFESSIONAL ENGINEER AND LAND SURVEYOR REGISTERED No. 14117 LESLIE G. STEPHENS

Pond Construction Criteria

The embankment for sediment basins (temporary and permanent) shall be designed and built using the following as minimum criteria:

1. The top of the dam shall be no less than 12 feet wide.

2. See design sheet for maximum and minimum embankment slopes.

3. The foundation and abutments for the impounding structure shall be designed to be stable under all conditions of construction and operation of the impoundments, with a minimum static safety factor of 1.3 for the normal pool with steady seepage saturation conditions.

4. The dam shall be constructed with a cutoff trench based upon prudent engineering practices for the site. The cutoff shall be located on the dam centerline and be of sufficient depth to extend into a relatively impervious material from which the core of the dam shall also be constructed.

5. The embankment foundation area shall be cleared of all organic matter, all surfaces sloped to no steeper than 1v:1h, and the entire foundation surface scarified.

6. The entire embankment and cutoff trench shall be compacted to 95 percent density, based on standard proctor as outlined in ASTM.

7. The material placed in the embankment shall be free of sod, roots, stones over 6 inches in diameter, and other objectionable materials. The fill material shall be placed and spread over the entire fill area, starting at the lowest point of the foundation, in layers not to exceed 12 inches in thickness. Construction of the fill shall be undertaken only at such times that the moisture content of the fill material will permit satisfactory compaction in accordance with paragraph 5.

8. The pool area of all basins will be cleared of timber and large undergrowth.

9. The primary decant system when consisting of a pipe shall be installed according to Class C pipe installation for embankment bedding.

10. The primary decant system shall be equipped with a device, or constructed, such as to insure that subsurface withdrawal is accomplished to prevent discharge of floating solids. If a channel is used as the primary decant a skimmer shall be installed to prevent floating solids from discharging.

11. A splash pad or riprap may be required under the discharge of the primary decant system where necessary to insure that the discharge does not erode the embankment.

12. The combination primary and secondary decant system shall be designed to safely carry the expected peak flow from a 25 year - 6 hour storm. The entire emergency overflow spillway channel will be a stabilized channel and will be stabilized upon completion of construction as specified within the detailed design plans using prudent engineering measures. These measures may consist of lining the spillway with concrete or a durable rock riprap, or the spillway being constructed in consolidated non-erodible material and planted with a mixture or both annual and perennial grasses, or a combination of any or all of the above.

13. Sediment basins using a single spillway system shall be an open channel of non-erodible construction consisting of concrete, durable rock riprap or its being constructed in consolidated non-erodible material as specified in the detailed design plans.

14. The settled embankment for temporary impoundments shall be a minimum of 1.0 foot above the maximum water elevation for the runoff from a 25 year - 6 hour, or a 10 year - 24 hour precipitation event (whichever has the greatest runoff). The settled embankment for permanent impoundments shall be a minimum of 1.0 foot above the maximum water elevation for the runoff from a 25 year - 6 hour, or a 10 year - 24 hour precipitation event or greater event as specified by the Regulatory Authority.(whichever has the greatest runoff).

15. If basins are built in series, then the combined decant system for each shall be designed to accommodate the entire contributing drainage area.

16. The dam and all disturbed areas shall be seeded with both perennial and annual grasses, fertilized and mulched in order to insure erosion is minimized. Hay bales or riprap may be placed at the toe of the dam immediately upon completion of construction.

17. The constructed height of the dam shall be increased a minimum of 5 percent over the design height to allow for settlement over the life of the embankment.

18. Final graded slopes of the entire permanent water impoundment area shall not exceed 2.5H-1.0V to provide for adequate safety and access for proposed water users.

19. Prior to Phase II bond release, additional data concerning water quality, water quantity, depth, size, configuration, postmining land use, etc., for each proposed permanent water impoundment, shall be submitted to the Regulatory Authority for permanent water impoundment approval.

20. All sediment basins will be inspected for stability, erosion, etc. two (2) times a month until removal of the structure or release of the reclamation bond.

21. The embankment and spillway will be maintained by repairing any damage such as erosion, slope failure or spillway damage until removal of the structure or release of the performance bond.

22. All ponds shall be examined quarterly for structural weakness, instability, erosion, or other hazardous conditions and maintenance performed as necessary. Formal inspections shall be made on an annual basis, including any reports or modifications, in accordance with 880-X-10C-.20[l(j)] of the Alabama Surface Mining Commission Regulations.

23. Sediment will be removed from each pond when the accumulated sediment reaches the sediment storage volume as shown on the detailed design sheet.

24. Upon completion of mining, successful reclamation and effluent standards being met, each sediment basin not remaining as a permanent water impoundment will be dewatered in an environmentally safe manner (such as siphoning, pumping, etc.) and reclaimed to approximate original contours by the following procedure: A permanent diversion channel (designed for a 10 year - 24 hour precipitation event) shall be cut along the outer edge of the basin to re-route drainage around the basin and back through the stabilized spillway to allow reclamation of the sediment basin. The diversion channel shall be designed and grassed as per enclosed information. (See permanent diversion for basin disposal).Upon completion of the diversion channel the back slope of the dam shall be graded to a minimum 3H to 1V slope. The dewatered sediment basin area shall be seeded with some combination of the following: Fescue, Bermuda, rye grass, canary grass and willows. After seeding the area shall be mulched. Any additional sediment or embankment material not used to meet original contour, if non-toxic, shall be spread in thin layers within the permit area and vegetated as stated in the approved reclamation plan. All toxic material encountered in the basin disposal shall be buried and covered with 4 feet of non-toxic material and vegetated as stated in the approved reclamation plan.

25. A qualified registered professional engineer or other qualified professional specialist, under the direction of the professional engineer shall conduct regular inspections during construction and upon completion shall inspect each basin for certification purposes.

26. Point source discharge embankments shall be constructed and abutments keyed into desirable material if at all possible. In the event that undesirable material is encountered, addition design and construction criteria shall be submitted prior to certification.

NOTES

1) The primary spillway of Basin 001, consisting of a 10 foot wide open channel lined with 4 inches of concrete reinforced with 6x6 – W2.9 x W2.9 wire. The channel lining will extend back to the existing drainage course. A 15’ X 20’ X 4” concrete splash pad is located at the end of the Spillway Tail Section which discharges into the drainage course.

2) The normal pool will be located at Elevation 1370.0 which will require the existing ground to be excavated down to Elevation 1363.0 in the area just West of the Spillway and down to 1366.0 up to 1368.0 North and West of the area to be excavated down to the 1363.0 Elevation. These areas are shown on the plan view map located within theses Detailed Design Plans for Basin 001.

3) The tail section of the spillway will be constructed with No. 4 Rebar on 12" centers in the bottom of the tail section. Ant-seep trenches will also be constructed on 20' spacing a minimum of 12" wide and 18" deep with No. 4 Rebar Dowels on 12" centers extending up from 3" above the bottom of the trench to splice into the rebar in the bottom of the spillway tail section. See Detailed cross sections on the Dam Detail sheet later in these Detailed Design Plans.

4) Any coal seam encountered in the construction zone will be removed and stockpiled up slope of the Basin during the Basin construction process.

5) See Diversion A-A’ plans for drainage control along the South Boundary of Increment No. 1. Construction will be completed prior to mining disturbance in the Watershed of the Diversion A-A’.

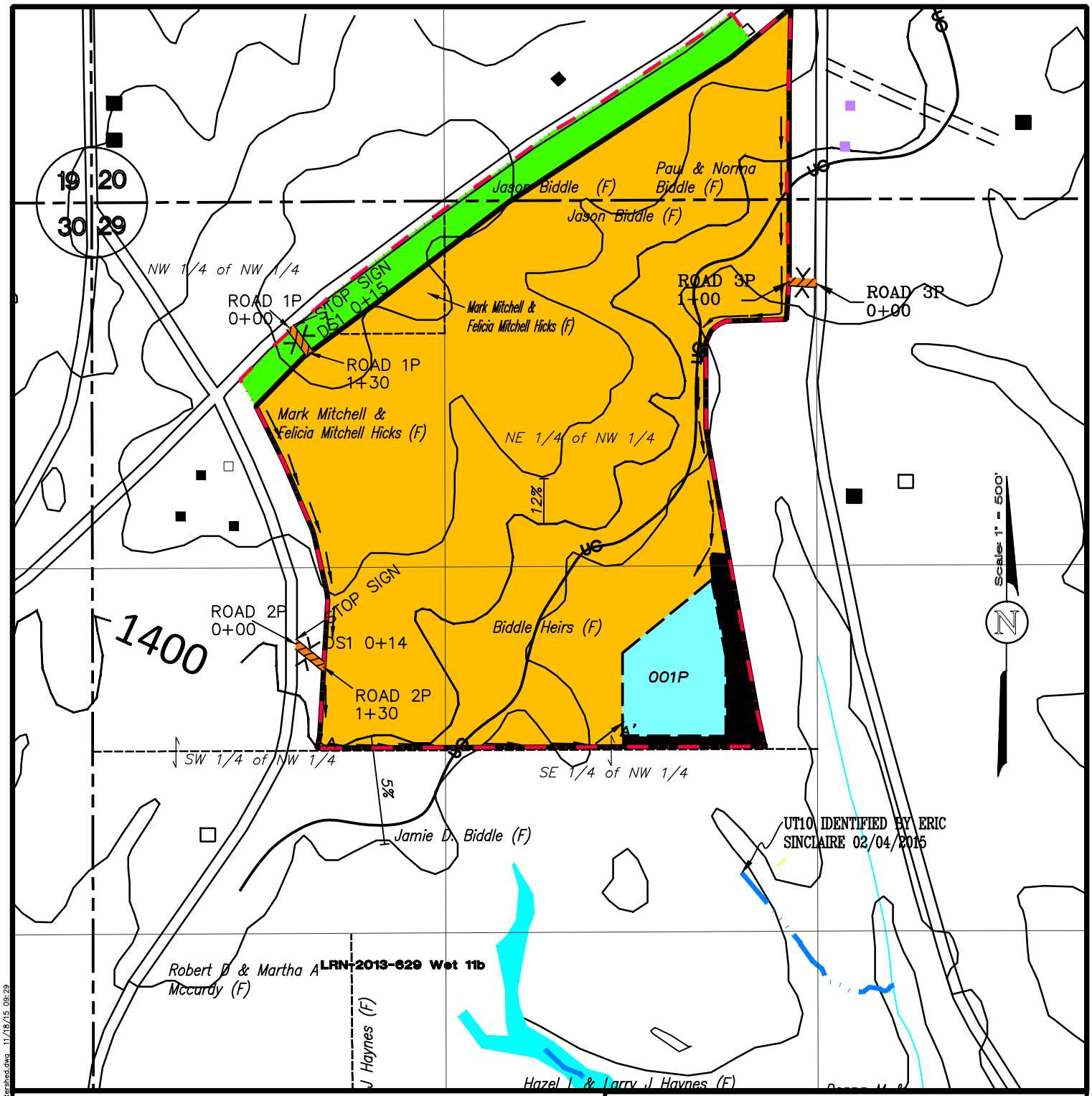

WATERSHED BOUNDARY

DIVERSION DITCH

HIGHWAY RIGHT OF WAY, CURVE NUMBER, 74

GRADED & BARE, CURVE NUMBER, 81

Sediment Basin
Curve Number 100

PERC
ENGINEERING CO., INC.
1606 Highway 78 West Jasper, Alabama 35501
P.O. Box 1712 Jasper, Alabama 35502
(205) 384-5853 Office (205) 295-3116 Fax

Ridgeholm Energy Partners, LLC
John Poe Mine P-3981
Basin 001P Watershed Map
Township 5 South, Range 9 East
Dekalb County, Alabama

DRAWN BY: S.W.L. DWG. NAME: Basin 001 Watershed	DATE: 11/18/15
APPROVED BY: L.G.S.	SCALE: 1"=500'

V:\Mining\Ridgeholm Energy Partners\John Poe Mine P-3981\BASIN 001P\Basin 001 Watershed.dwg 11/18/15 09:29

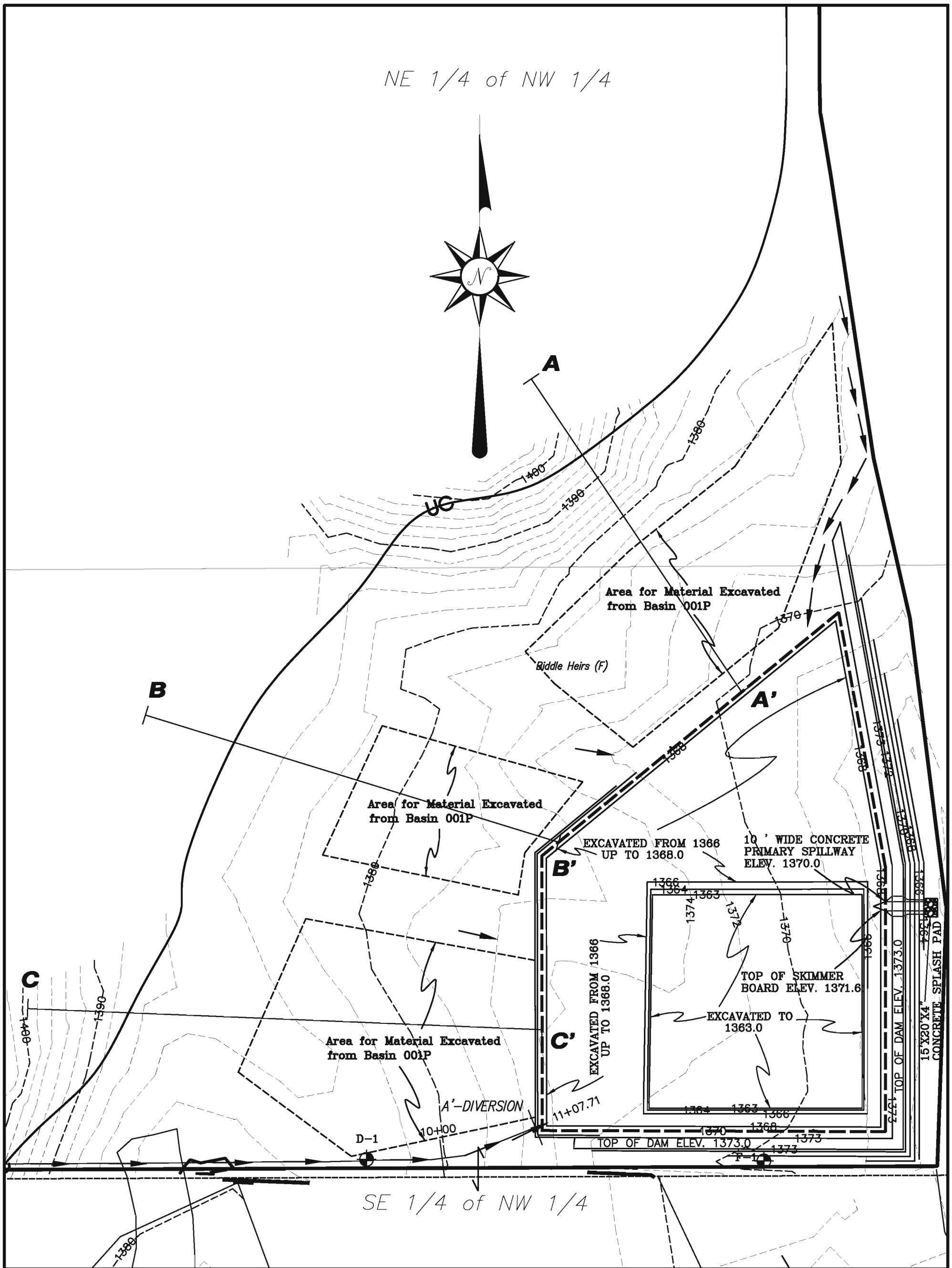

LEGEND

- PERMIT BOUNDARY
- EXISTING 2' CONTOUR INTERVAL
- 1370 EXISTING 10' CONTOUR INTERVAL
- FINISH CONTOUR
- DIVERSION DITCH & MAJOR INFLOW
- NORMAL POOL LEVEL 1370.0
- 100' STREAM SETBACK
- UC UPPER CLIFF COAL SEAM OUTCROP
- F-1 FOUNDATION MATERIAL
- D-1 DAM MATERIAL

PERC ENGINEERING CO., INC.

Ridgeholm Energy Partners, LLC
John Poe Mine P-3981
Basin 001P

DRAWN BY: S.W.L. DWG. NAME: Basin 001 Plan View	DATE: 11/18/2015
APPROVED BY: L.G.S.	SCALE: 1"=100'

V:\Mining\Ridgeholm Energy Partners\John Poe Mine P-3981\BASIN 001P\Basin 001 Plan View.dwg 11/25/15 17:18

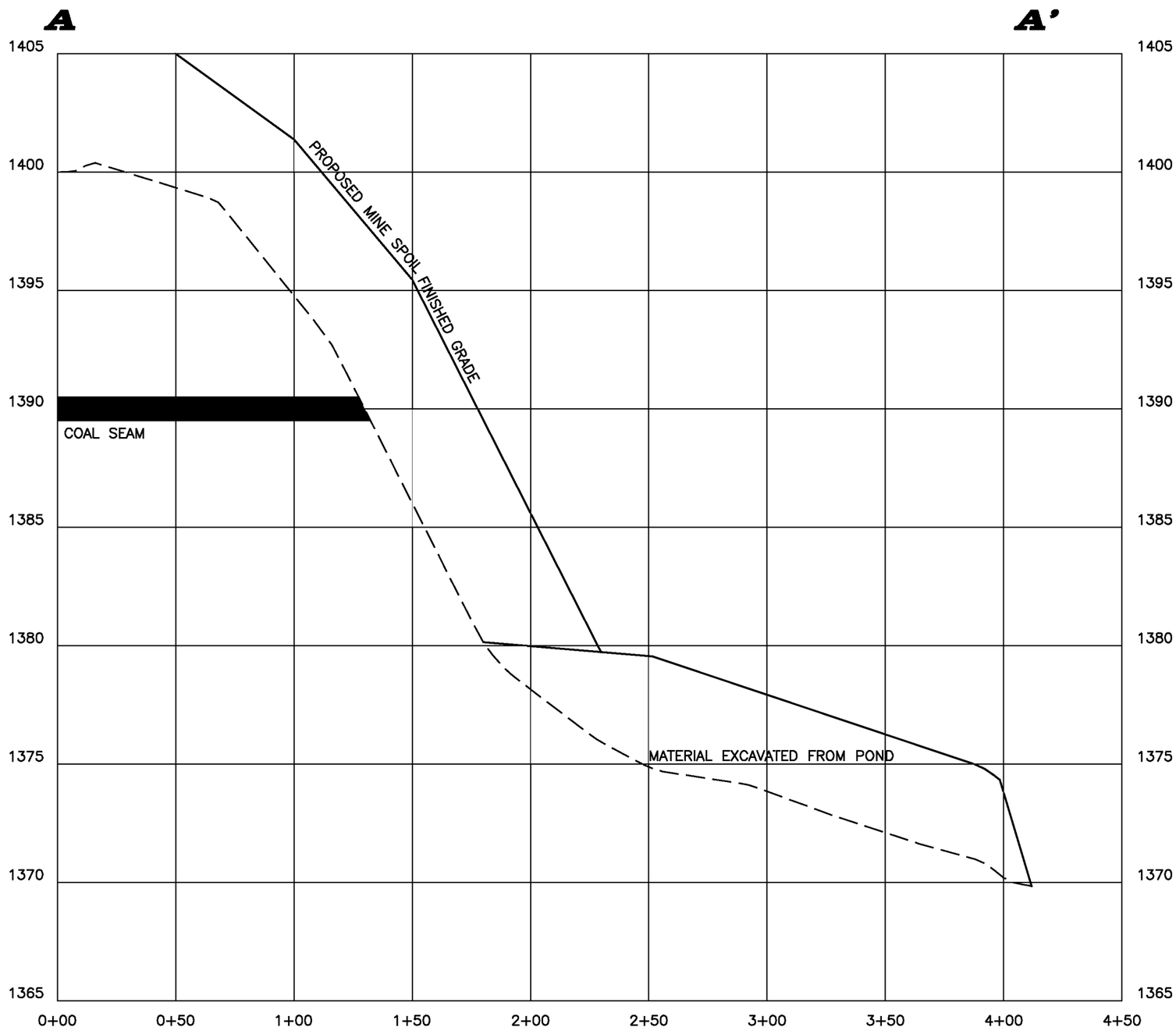

SCALE
Horizontal: 1"=50'
Vertical: 1"=5'

LEGEND
EXISTING GROUND

PERC
ENGINEERING CO., INC.
1608 Hwy. 78 West Jasper, AL 35501/P.O. Box 1712-35502
(205) 384-5553 Office (205) 295-3114 Fax

Ridgeholm Energy Partners, LLC
John Poe Mine P-3981
Basin 001P
Cross Section A-A'

.DWG NAME:	Basin 001 xsec	DATE:	11-25-15
DRAWN BY:	S.A.E.	SCALE:	AS SHOWN
APPROVED BY:	L.G.S.	JOB NUMBER:	15-04482-010

V:\Mining\Ridgeholm Energy Partners\John Poe Mine P-3981\BASIN 001P\Basin 001 xsec.dwg 12/02/15 14:57

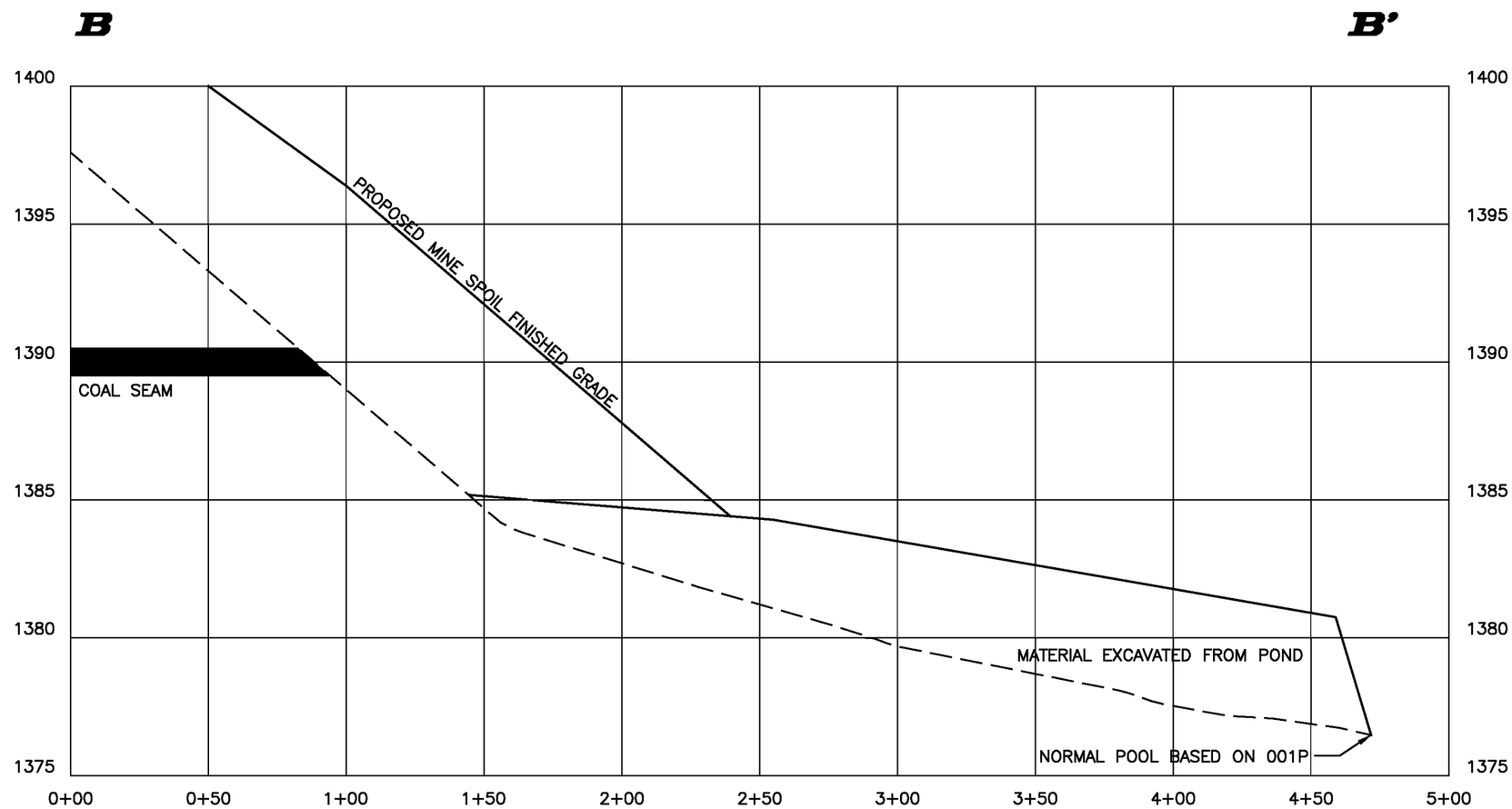

SCALE

Horizontal: 1"=50'
Vertical: 1"=5'

LEGEND

— — — — EXISTING GROUND

W:\Mining\Ridgeholm Energy Partners\John Poe Mine P-3981\BASIN 001P\Basin 001 xsec.dwg 12/02/15 14:57

PERC
ENGINEERING CO., INC.
1606 Hwy. 78 West Jasper, AL 35501/P.O. Box 1712-35502
(205) 384-3553 Office (205) 295-3114 Fax

Ridgeholm Energy Partners, LLC
John Poe Mine P-3981
Basin 001P
Cross Section B-B'

.DWG NAME:	Basin 001 xsec	DATE:	11-25-15
DRAWN BY:	S.A.E.	SCALE:	AS SHOWN
APPROVED BY:	L.G.S.	JOB NUMBER:	15-04482-010

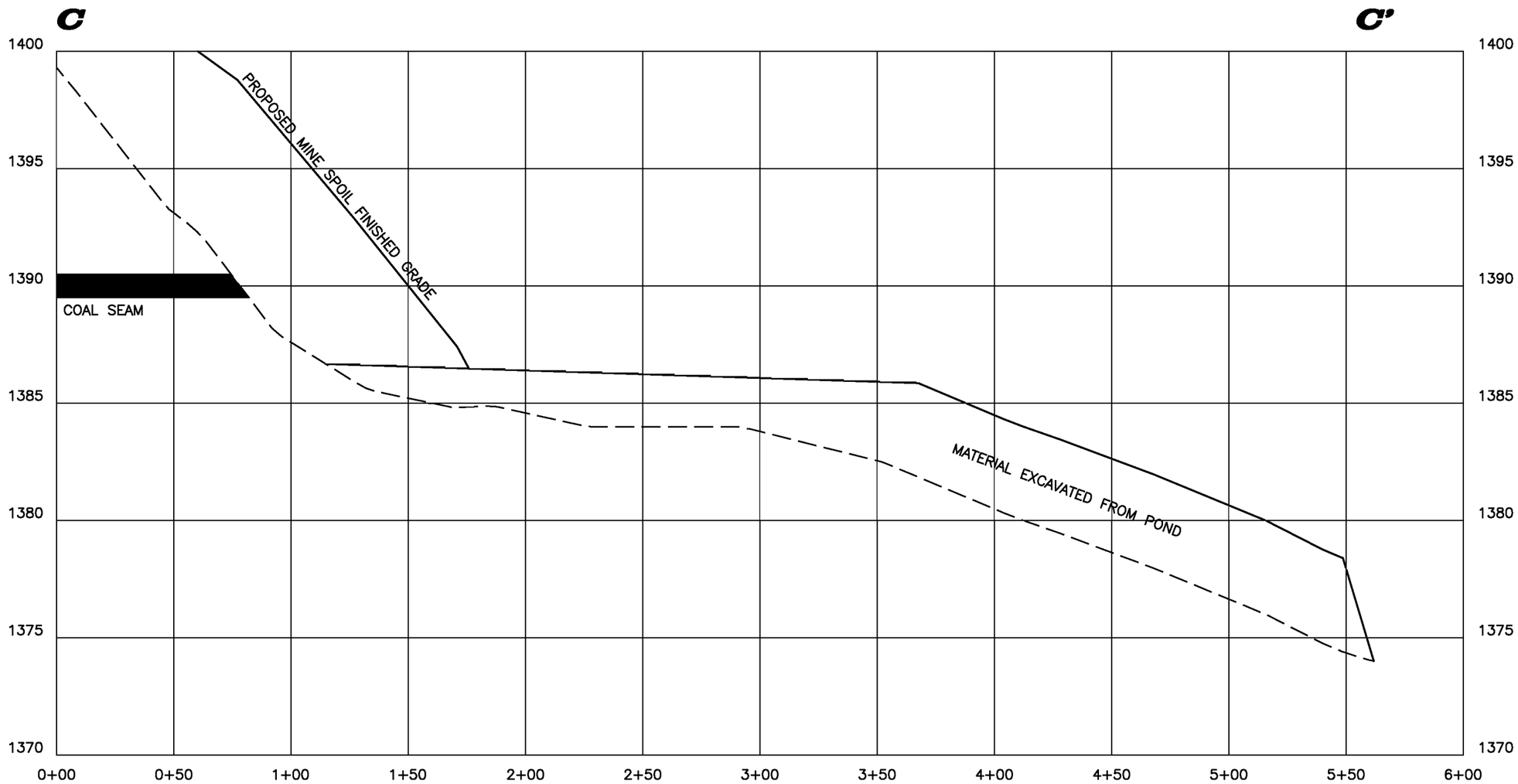

SCALE

Horizontal: 1"=50'
Vertical: 1"=5'

LEGEND

— — — — EXISTING GROUND

PERC
ENGINEERING CO., INC.
1608 Hwy. 78 West Jasper, AL 35501/P.O. Box 1712–35502
(205) 384–5353 Office (205) 295–3114 Fax

Ridgeholm Energy Partners, LLC
John Poe Mine P-3981
Basin 001P
Cross Section C-C'

.DWG NAME:	Basin 001 xsec	DATE:	11–25–15
DRAWN BY:	S.A.E.	SCALE:	AS SHOWN
APPROVED BY:	L.G.S.	JOB NUMBER:	15–04482–010

H:\Mining\Ridgeholm Energy Partners\John Poe Mine P-3981\BASIN 001P\basin 001 xsec.dwg 12/02/15 14:57

Skimmer Board Elev. 1371.6
Spillway Elev. 1370.0
Q Out 69.22 C.F.S.
V Out 2.68 FT/S

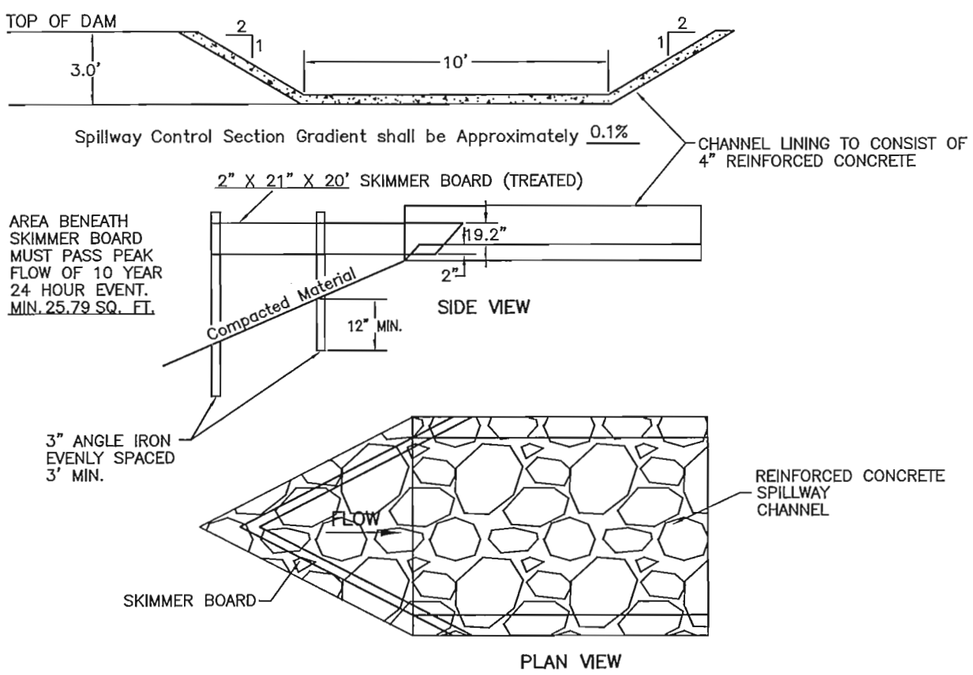

SKIMMER BOARD DETAIL

Spillway Tail Section Gradient shall be Approximately 40%

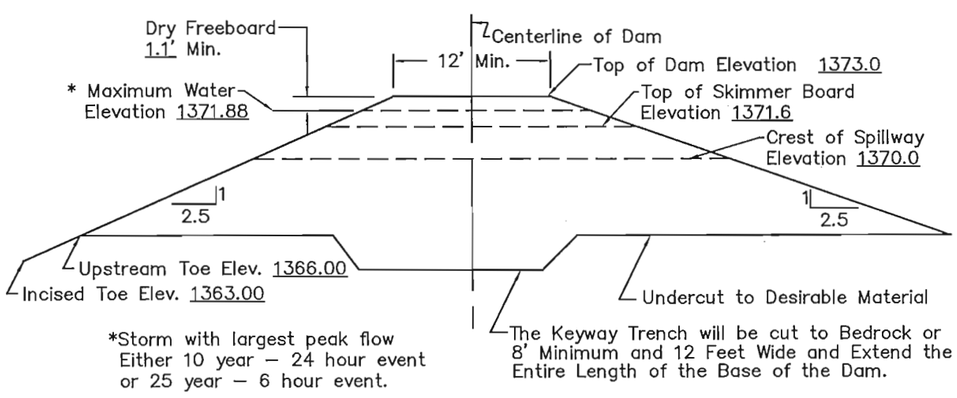

*Storm with largest peak flow Either 10 year – 24 hour event or 25 year – 6 hour event.

Typical Cross Section Along Spillway

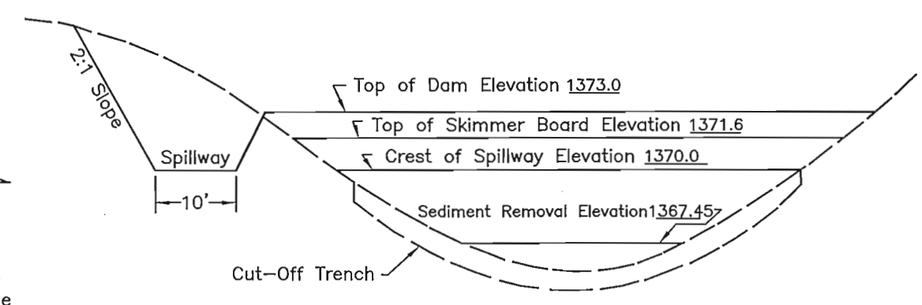

Typical Profile Looking Downstream

Notes:

1. The sediment shall be removed from the basin when the accumulated sediment reaches the sediment storage volume.
2. Outer slopes of embankment shall be grassed.
3. Fill material shall be placed in 12" lifts and compacted to 95% of standard proctor.
4. The surface beneath the embankment shall be stripped of undesirable material.
5. Upon completion of mining, reclamation and maintenance of water quality standards the pond will be de–watered and reclaimed.
6. See the attached pond construction criteria.
7. See the attached drawings and specifications for diversions.
8. Elevations are based on assumed datum.
9. Channel lining within the control section of the spillway channel will extend to the maximum water elevation.

Stage vs. Storage Curve

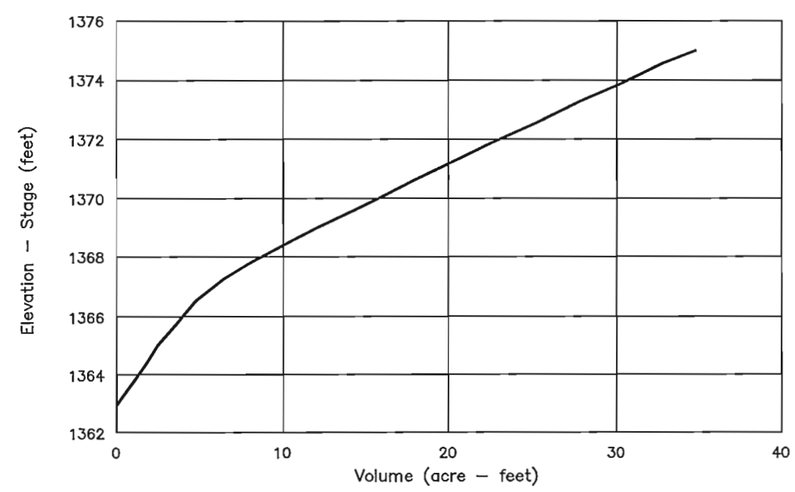

Storage Computation

Elevation (feet)	Area (acres)	Avg. Area (acres)	Interval (feet)	Storage (ac.–ft.)	Acc. Storage (ac.–ft.)
1363.00	1.235				0.000
		1.267	1.0	1.266	
1364.00	1.298				1.266
		1.354	2.0	2.707	
1366.00	1.409				3.973
		2.467	2.0	4.775	
1368.00	3.525				8.748
		3.585	2.0	7.169	
1370.00	3.645				15.930
		3.733	3.0	11.198	
1373.00	3.821				27.115
		3.911	2.0	7.821	
1375.00	4.000				34.936

Key Basin Parameters

Drainage Area	81.4 Acres
Disturbed Area	75.3 Acres
Sediment Storage	7.0 Ac. Ft.
Detention Storage	8.93 Ac. Ft.
Permanent Pool Capacity	15.93 Ac. Ft.
Total Basin Capacity	21.91 Ac. Ft.
Peak Inflow	166.83 C.F.S.
Peak Outflow	69.22 C.F.S.

LESLIE G. STEPHENS
ALABAMA
REGISTERED
No. 14117
LAND SURVEYOR AND ENGINEER

11/30/2015
Leslie G. Stephens, P.E., P.L.S. Date
AL Registration. #14117–E

PERC ENGINEERING CO., INC.

Ridgeholm Energy Partners, LLC
John Poe Mine P-3981
Basin 001P

DRAWN BY: S.W.L DWG. NAME: WBFT2B1DTM–R3–111815	DATE: 11/30/2015
APPROVED BY: L.G.S.	SCALE: NONE

S:\Mining\Ridgeholm Energy Partners\John Poe Mine P-3981\BASIN 001P\RHEP-PM001DOCERT.dwg 11/30/15 13:44

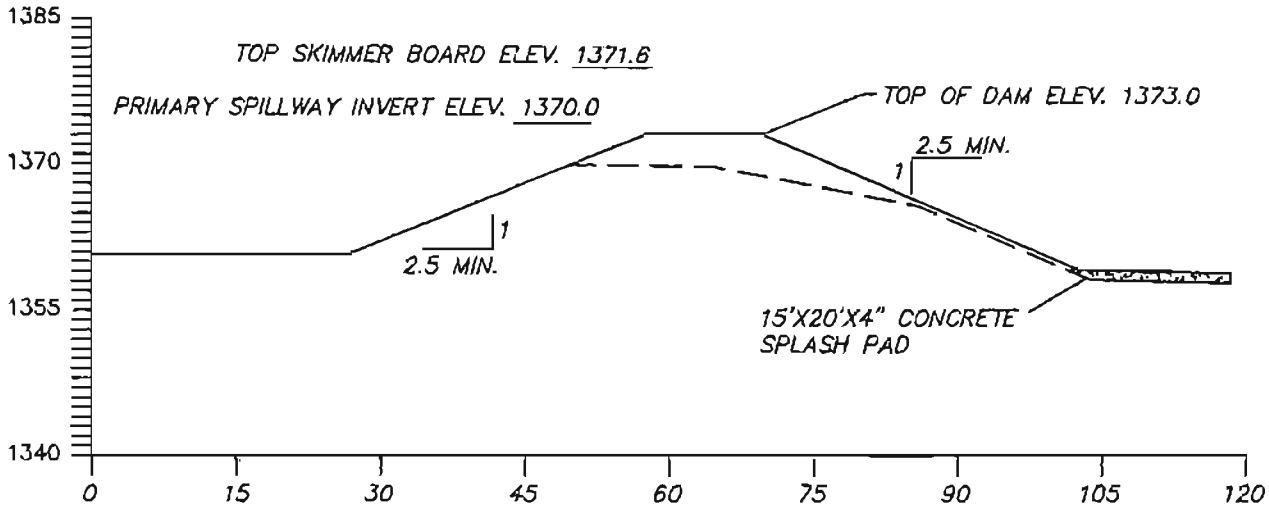

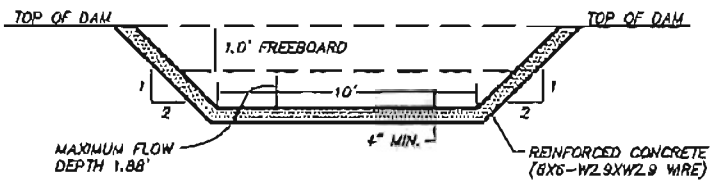

SPILLWAY CONTROL SECTION TYPICAL

N.T.S.

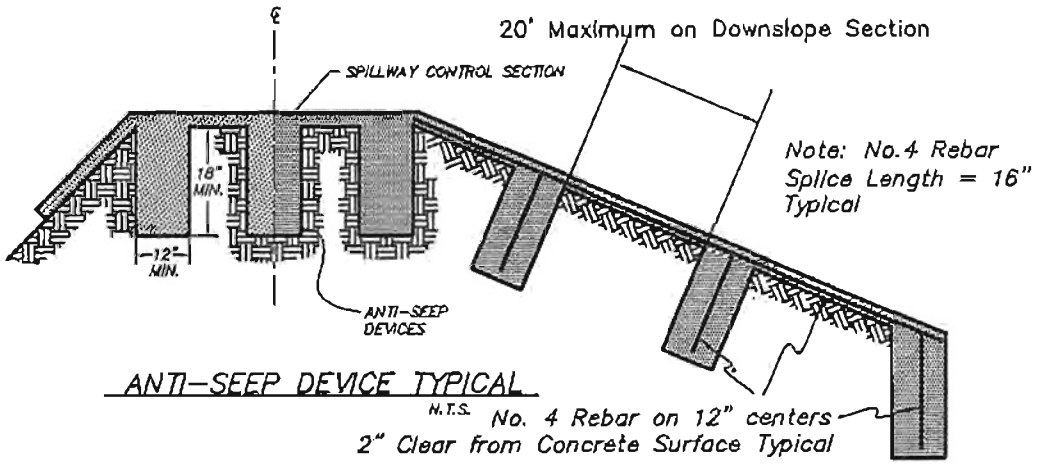

ANTI-SEEP DEVICE TYPICAL

N.T.S.

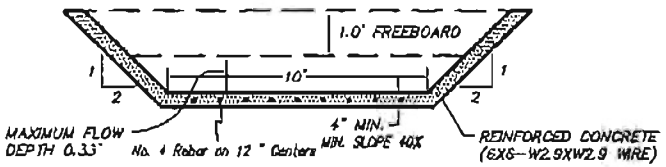

SPILLWAY TAIL SECTION TYPICAL

N.T.S.

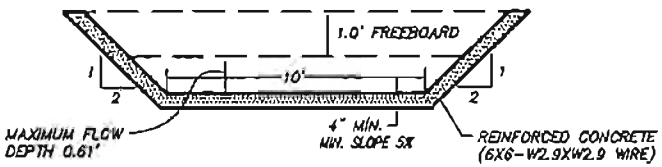

SPILLWAY INTERMEDIATE SECTION TYPICAL

N.T.S.

PERC ENGINEERING CO. INC.

Ridgeholm Energy Partners, LLC
John Poe Mine P-3981
Basin 001P
Dam Details

DRAWN BY: S.W.L DWG. NAME: RHEPJPM00100-2	DATE: 11/18/2015
APPROVED BY: L.O.S.	SCALE: AS NOTED

Ridgeholm Energy Partners LLC John Poe Mine P-3981 Basin 001 Spillway Control Section

Material: Concrete, Rubble

Trapezoidal Channel

Bottom Width (ft)	Left Sideslope Ratio	Right Sideslope Ratio	Slope (%)	Manning's n	Freeboard Depth (ft)	Freeboard % of Depth	Freeboard Mult. x (VxD)
10.00	2.0:1	2.0:1	0.1	0.0220	1.00		

	w/o Freeboard	w/ Freeboard
Design Discharge:	69.22 cfs	
Depth:	1.88 ft	2.88 ft
Top Width:	17.50 ft	21.50 ft
Velocity:	2.68 fps	
X-Section Area:	25.79 sq ft	
Hydraulic Radius:	1.403 ft	
Froude Number:	0.39	

Ridgeholm Energy Partners LLC John Poe Mine P-3981 Basin 001 Spillway Intermediate Section

Material: Concrete, Rubble

Trapezoidal Channel

Bottom Width (ft)	Left Sideslope Ratio	Right Sideslope Ratio	Slope (%)	Manning's n	Freeboard Depth (ft)	Freeboard % of Depth	Freeboard Mult. x (VxD)
10.00	2.0:1	2.0:1	5.0	0.0220	1.00		

	w/o Freeboard	w/ Freeboard
Design Discharge:	69.22 cfs	
Depth:	0.61 ft	1.61 ft
Top Width:	12.45 ft	16.45 ft
Velocity:	10.05 fps	
X-Section Area:	6.89 sq ft	
Hydraulic Radius:	0.541 ft	
Froude Number:	2.38	

Ridgeholm Energy Partners LLC John Poe Mine P-3981 Basin 001 Spillway Tail Section

Material: Concrete, Rubble

Trapezoidal Channel

Bottom Width (ft)	Left Sideslope Ratio	Right Sideslope Ratio	Slope (%)	Manning's n	Freeboard Depth (ft)	Freeboard % of Depth	Freeboard Mult. x (VxD)
10.00	2.0:1	2.0:1	40.0	0.0220	1.00		

	w/o Freeboard	w/ Freeboard
Design Discharge:	69.22 cfs	
Depth:	0.33 ft	1.33 ft
Top Width:	11.33 ft	15.33 ft
Velocity:	19.55 fps	
X-Section Area:	3.54 sq ft	
Hydraulic Radius:	0.308 ft	
Froude Number:	6.16	

Ridgeholm Energy Partners, LLC
John Poe Mine
P- 3981
Basin 001
Hydrology & Sedimentology
10 Yr. - 24 Hr. Event

Copyright 1998 -2010 Pamela L Schwab

Ridgeholm Energy Partners, LLC

John Poe Mine

P-3981

Basin 001P

5.4 Inches, 10 Year - 24 Hour,

DRN 58

LGS

PERC ENGINEERING CO., INC.
P. O. BOX 1712
1606 HIGHWAY 78 WEST
JASPER ALABAMA 35502

Phone: 205-384-5553
Email: LSTEPHENS@PERCENGINEERING.COM

General Information

Storm Information:

Storm Type:	DRN58
Design Storm:	10 yr - 24 hr
Rainfall Depth:	5.400 inches

Particle Size Distribution:

Size (mm)	Topsoil	Spoil
3.0000	100.000%	100.000%
2.0000	99.440%	98.340%
1.0000	98.910%	91.210%
0.5000	98.540%	84.460%
0.3000	97.720%	79.680%
0.2000	84.230%	75.660%
0.1000	53.450%	64.990%
0.0500	32.070%	51.090%
0.0300	22.130%	42.930%
0.0100	13.020%	1.640%
0.0050	8.460%	0.000%
0.0030	7.160%	0.000%
0.0010	0.000%	0.000%
0.0001	0.000%	0.000%

Structure Networking:

Type	Stru #	(flows into)	Stru #	Musk. K (hrs)	Musk. X	Description
Pond	#1	==>	End	0.000	0.000	Basin 001P

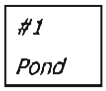

Structure Summary:

		Immediate Contributing Area (ac)	Total Contributing Area (ac)	Peak Discharge (cfs)	Total Runoff Volume (ac-ft)	Sediment (tons)	Peak Sediment Conc. (mg/l)	Peak Settleable Conc. (ml/l)	24VW (ml/l)
#1	In	81.400	81.400	86.92	22.29	314.2	19,227	14.83	7.98
	Out			64.83	22.10	10.0	984	0.40	0.15

Particle Size Distribution(s) at Each Structure

Structure #1:

Size (mm)	In	Out
3.0000	100.000%	100.000%
2.0000	100.000%	100.000%
1.0000	94.153%	100.000%
0.5000	87.191%	100.000%
0.3000	82.261%	100.000%
0.2000	78.103%	100.000%
0.1000	67.072%	100.000%
0.0500	52.718%	100.000%
0.0300	44.294%	100.000%
0.0100	1.703%	53.681%
0.0050	0.007%	0.232%
0.0030	0.006%	0.197%
0.0010	0.000%	0.000%
0.0001	0.000%	0.000%

Structure Detail:

Structure #1 (Pond)

Basin 001P

Pond Inputs:

Initial Pool Elev:	1,370.00 ft
Initial Pool:	8.93 ac-ft
*Sediment Storage:	7.00 ac-ft
Dead Space:	20.00 %

**Sediment capacity was entered by user*

Emergency Spillway

Spillway Elev	Crest Length (ft)	Left Sideslope	Right Sideslope	Bottom Width (ft)
1,370.00	12.00	2.00:1	2.00:1	10.00

Pond Results:

Peak Elevation:	1,371.57 ft
H'graph Detention Time:	2.59 hrs
Pond Model:	CSTRS
Dewater Time:	0.98 days
Trap Efficiency:	96.83 %

Dewatering time is calculated from peak stage to lowest spillway

Elevation-Capacity-Discharge Table

Elevation	Area (ac)	Capacity (ac-ft)	Discharge (cfs)	Dewater Time (hrs)	
1,367.45	2.846	0.000	0.000		Top of Sed. Storage
1,367.50	2.907	0.156	0.000		
1,368.00	3.525	1.761	0.000		
1,368.50	3.555	3.531	0.000		
1,369.00	3.585	5.316	0.000		
1,369.50	3.615	7.116	0.000		
1,370.00	3.645	8.931	0.000		Spillway #1
1,370.50	3.674	10.761	2.032	10.90*	
1,371.00	3.703	12.605	27.918	11.10	
1,371.50	3.732	14.464	59.514	1.35	
1,371.57	3.736	14.709	64.833	0.15	Peak Stage
1,372.00	3.762	16.338	100.201		

Elevation	Area (ac)	Capacity (ac-ft)	Discharge (cfs)	Dewater Time (hrs)
1,372.50	3.791	18.226	150.727	
1,373.00	3.821	20.129	211.367	
1,373.50	3.865	22.051	282.455	
1,374.00	3.910	23.994	364.353	
1,374.50	3.955	25.961	457.432	
1,375.00	4.000	27.949	562.063	

**Designates time(s) to dewater have been extrapolated beyond the 50 hour hydrograph limit.*

Detailed Discharge Table

Elevation (ft)	Emergency Spillway (cfs)	Combined Total Discharge (cfs)
1,367.45	0.000	0.000
1,367.50	0.000	0.000
1,368.00	0.000	0.000
1,368.50	0.000	0.000
1,369.00	0.000	0.000
1,369.50	0.000	0.000
1,370.00	0.000	0.000
1,370.50	2.032	2.032
1,371.00	27.918	27.918
1,371.50	59.514	59.514
1,372.00	100.201	100.201
1,372.50	150.727	150.727
1,373.00	211.367	211.367
1,373.50	282.455	282.455
1,374.00	364.353	364.353
1,374.50	457.432	457.432
1,375.00	562.063	562.063

Subwatershed Hydrology Detail:

Stru #	SWS #	SWS Area (ac)	Time of Conc (hrs)	Musk K (hrs)	Musk X	Curve Number	UHS	Peak Discharge (cfs)	Runoff Volume (ac-ft)
#1	1	6.100	0.070	0.183	0.345	74.000	M	5.84	1.364
	2	71.300	0.132	0.000	0.000	81.000	F	76.27	19.128
	3	4.000	0.045	0.000	0.000	100.000	F	5.66	1.798
	Σ	**81.400**						**86.92**	**22.290**

Subwatershed Sedimentology Detail:

Stru #	SWS #	Soil K	L (ft)	S (%)	C	P	PS #	Sediment (tons)	Peak Sediment Conc. (mg/l)	Peak Settleable Conc (ml/l)	24VW (ml/l)
#1	1	0.240	200.00	2.50	0.0100	1.0000	1	0.3	261	0.18	0.10
	2	0.240	200.00	1.60	0.9000	1.0000	2	314.0	21,168	16.33	9.26
	3	0.001	200.00	0.10	0.0010	1.0000	1	0.0	0	0.00	0.00
	Σ							**314.2**	**19,227**	**14.83**	**7.98**

Subwatershed Time of Concentration Details:

Stru #	SWS #	Land Flow Condition	Slope (%)	Vert. Dist. (ft)	Horiz. Dist. (ft)	Velocity (fps)	Time (hrs)
#1	1	5. Nearly bare and untilled, and alluvial valley fans	2.50	5.00	200.00	1.580	0.035
		8. Large gullies, diversions, and low flowing streams	2.50	15.00	600.00	4.740	0.035
			0.00	0.00	0.00	0.000	0.000
#1	**1**	**Time of Concentration:**					**0.070**
#1	2	5. Nearly bare and untilled, and alluvial valley fans	8.00	16.00	200.00	2.820	0.019
		8. Large gullies, diversions, and low flowing streams	1.82	30.00	1,650.00	4.040	0.113
#1	**2**	**Time of Concentration:**					**0.132**
#1	3	3. Short grass pasture	1.33	2.00	150.00	0.920	0.045
#1	**3**	**Time of Concentration:**					**0.045**

Subwatershed Muskingum Routing Details:

Stru #	SWS #	Land Flow Condition	Slope (%)	Vert. Dist. (ft)	Horiz. Dist. (ft)	Velocity (fps)	Time (hrs)
#1	1	8. Large gullies, diversions, and low flowing streams	1.60	40.00	2,500.15	3.790	0.183
#1	**1**	**Muskingum K:**					**0.183**

Ridgeholm Energy Partners, LLC
John Poe Mine
P-3981
Basin 001
Hydrology & Sedimentology
25 Yr. - 6 Hr. Event

Ridgeholm Energy Partners, LLC

John Poe Mine

P-3981

Basin 001P

4.5 Inches, 25 Year - 24 Hour,

SCS 6 HOUR

LGS

PERC ENGINEERING CO., INC.
P. O. BOX 1712
1606 HIGHWAY 78 WEST
JASPER ALABAMA 35502

Phone: 205-384-5553
Email: LSTEPHENS@PERCENGINEERING.COM

General Information

Storm Information:

Storm Type:	Rainfall Event

Accumulated Time (hrs)	Accumulated Depth (in)
0.00	0.0000
0.50	0.1580
1.00	0.3600
1.50	0.6080
2.00	1.0350
2.50	2.7000
3.00	3.1500
3.50	3.5100
4.00	3.7580
4.50	3.9830
5.00	4.1630
5.50	4.3430
6.00	4.5000

Peak 30-minute Intensity: 3.33 in/hr

Particle Size Distribution:

Size (mm)	Topsoil	Spoil
3.0000	100.000%	100.000%
2.0000	99.440%	98.340%
1.0000	98.910%	91.210%
0.5000	98.540%	84.460%
0.3000	97.720%	79.680%
0.2000	84.230%	75.660%
0.1000	53.450%	64.990%
0.0500	32.070%	51.090%
0.0300	22.130%	42.930%
0.0100	13.020%	1.640%
0.0050	8.460%	0.000%
0.0030	7.160%	0.000%
0.0010	0.000%	0.000%

Size (mm)	Topsoil	Spoil
0.0001	0.000%	0.000%

Structure Networking:

Type	Stru #	(flows into)	Stru #	Musk. K (hrs)	Musk. X	Description
Pond	#1	==>	End	0.000	0.000	Basin 001P

#1
Pond

Structure Summary:

		Immediate Contributing Area (ac)	Total Contributing Area (ac)	Peak Discharge (cfs)	Total Runoff Volume (ac-ft)	Sediment (tons)	Peak Sediment Conc. (mg/l)	Peak Settleable Conc. (ml/l)	24VW (ml/l)
#1	In	81.400	81.400	166.83	17.08	396.6	29,222	22.60	13.10
	Out			69.22	17.04	19.1	1,854	0.96	0.45

Particle Size Distribution(s) at Each Structure

Structure #1:

Size (mm)	In	Out
3.0000	100.000%	100.000%
2.0000	100.000%	100.000%
1.0000	98.597%	100.000%
0.5000	91.307%	100.000%
0.3000	86.144%	100.000%
0.2000	81.793%	100.000%
0.1000	70.241%	100.000%
0.0500	55.210%	100.000%
0.0300	46.388%	100.000%
0.0100	1.783%	37.067%
0.0050	0.007%	0.152%
0.0030	0.006%	0.129%
0.0010	0.000%	0.000%
0.0001	0.000%	0.000%

Structure Detail:

Structure #1 (Pond)

Basin 001P

Pond Inputs:

Initial Pool Elev:	1,370.00 ft
Initial Pool:	8.93 ac-ft
*Sediment Storage:	7.00 ac-ft
Dead Space:	20.00 %

**Sediment capacity was entered by user*

Emergency Spillway

Spillway Elev	Crest Length (ft)	Left Sideslope	Right Sideslope	Bottom Width (ft)
1,370.00	12.00	2.00:1	2.00:1	10.00

Pond Results:

Peak Elevation:	1,371.62 ft
H'graph Detention Time:	2.40 hrs
Pond Model:	CSTRS
Dewater Time:	0.69 days
Trap Efficiency:	95.19 %

Dewatering time is calculated from peak stage to lowest spillway

Elevation-Capacity-Discharge Table

Elevation	Area (ac)	Capacity (ac-ft)	Discharge (cfs)	Dewater Time (hrs)	
1,367.45	2.846	0.000	0.000		Top of Sed. Storage
1,367.50	2.907	0.156	0.000		
1,368.00	3.525	1.761	0.000		
1,368.50	3.555	3.531	0.000		
1,369.00	3.585	5.316	0.000		
1,369.50	3.615	7.116	0.000		
1,370.00	3.645	8.931	0.000		Spillway #1
1,370.50	3.674	10.761	2.032	10.90*	
1,371.00	3.703	12.605	27.918	2.80	
1,371.50	3.732	14.464	59.514	2.25	
1,371.62	3.740	14.911	69.219	0.50	Peak Stage
1,372.00	3.762	16.338	100.201		

Elevation	Area (ac)	Capacity (ac-ft)	Discharge (cfs)	Dewater Time (hrs)
1,372.50	3.791	18.226	150.727	
1,373.00	3.821	20.129	211.367	
1,373.50	3.865	22.051	282.455	
1,374.00	3.910	23.994	364.353	
1,374.50	3.955	25.961	457.432	
1,375.00	4.000	27.949	562.063	

**Designates time(s) to dewater have been extrapolated beyond the 50 hour hydrograph limit.*

Detailed Discharge Table

Elevation (ft)	Emergency Spillway (cfs)	Combined Total Discharge (cfs)
1,367.45	0.000	0.000
1,367.50	0.000	0.000
1,368.00	0.000	0.000
1,368.50	0.000	0.000
1,369.00	0.000	0.000
1,369.50	0.000	0.000
1,370.00	0.000	0.000
1,370.50	2.032	2.032
1,371.00	27.918	27.918
1,371.50	59.514	59.514
1,372.00	100.201	100.201
1,372.50	150.727	150.727
1,373.00	211.367	211.367
1,373.50	282.455	282.455
1,374.00	364.353	364.353
1,374.50	457.432	457.432
1,375.00	562.063	562.063

Subwatershed Hydrology Detail:

Stru #	SWS #	SWS Area (ac)	Time of Conc (hrs)	Musk K (hrs)	Musk X	Curve Number	UHS	Peak Discharge (cfs)	Runoff Volume (ac-ft)
#1	1	6.100	0.070	0.183	0.345	74.000	M	11.90	0.996
	2	71.300	0.132	0.000	0.000	81.000	F	151.53	14.587
	3	4.000	0.045	0.000	0.000	100.000	F	13.43	1.495
	Σ	**81.400**						**166.83**	**17.078**

Subwatershed Sedimentology Detail:

Stru #	SWS #	Soil K	L (ft)	S (%)	C	P	PS #	Sediment (tons)	Peak Sediment Conc. (mg/l)	Peak Settleable Conc (ml/l)	24VW (ml/l)
#1	1	0.240	200.00	2.50	0.0100	1.0000	1	0.3	414	0.28	0.17
	2	0.240	200.00	1.60	0.9000	1.0000	2	396.2	31,840	24.62	15.30
	3	0.001	200.00	0.10	0.0010	1.0000	1	0.0	0	0.00	0.00
	Σ							**396.6**	**29,222**	**22.60**	**13.10**

Subwatershed Time of Concentration Details:

Stru #	SWS #	Land Flow Condition	Slope (%)	Vert. Dist. (ft)	Horiz. Dist. (ft)	Velocity (fps)	Time (hrs)
#1	1	5. Nearly bare and untilled, and alluvial valley fans	2.50	5.00	200.00	1.580	0.035
		8. Large gullies, diversions, and low flowing streams	2.50	15.00	600.00	4.740	0.035
			0.00	0.00	0.00	0.000	0.000
#1	**1**	**Time of Concentration:**					**0.070**
#1	2	5. Nearly bare and untilled, and alluvial valley fans	8.00	16.00	200.00	2.820	0.019
		8. Large gullies, diversions, and low flowing streams	1.82	30.00	1,650.00	4.040	0.113
#1	**2**	**Time of Concentration:**					**0.132**
#1	3	3. Short grass pasture	1.33	2.00	150.00	0.920	0.045
#1	**3**	**Time of Concentration:**					**0.045**

Subwatershed Muskingum Routing Details:

Stru #	SWS #	Land Flow Condition	Slope (%)	Vert. Dist. (ft)	Horiz. Dist. (ft)	Velocity (fps)	Time (hrs)
#1	1	8. Large gullies, diversions, and low flowing streams	1.60	40.00	2,500.15	3.790	0.183
#1	**1**	**Muskingum K:**					**0.183**

Ridgeholm Energy Partners, LLC
John Poe Mine
P- 3981
Basin 001
Soil Classification

LIQUID AND PLASTIC LIMITS TEST REPORT

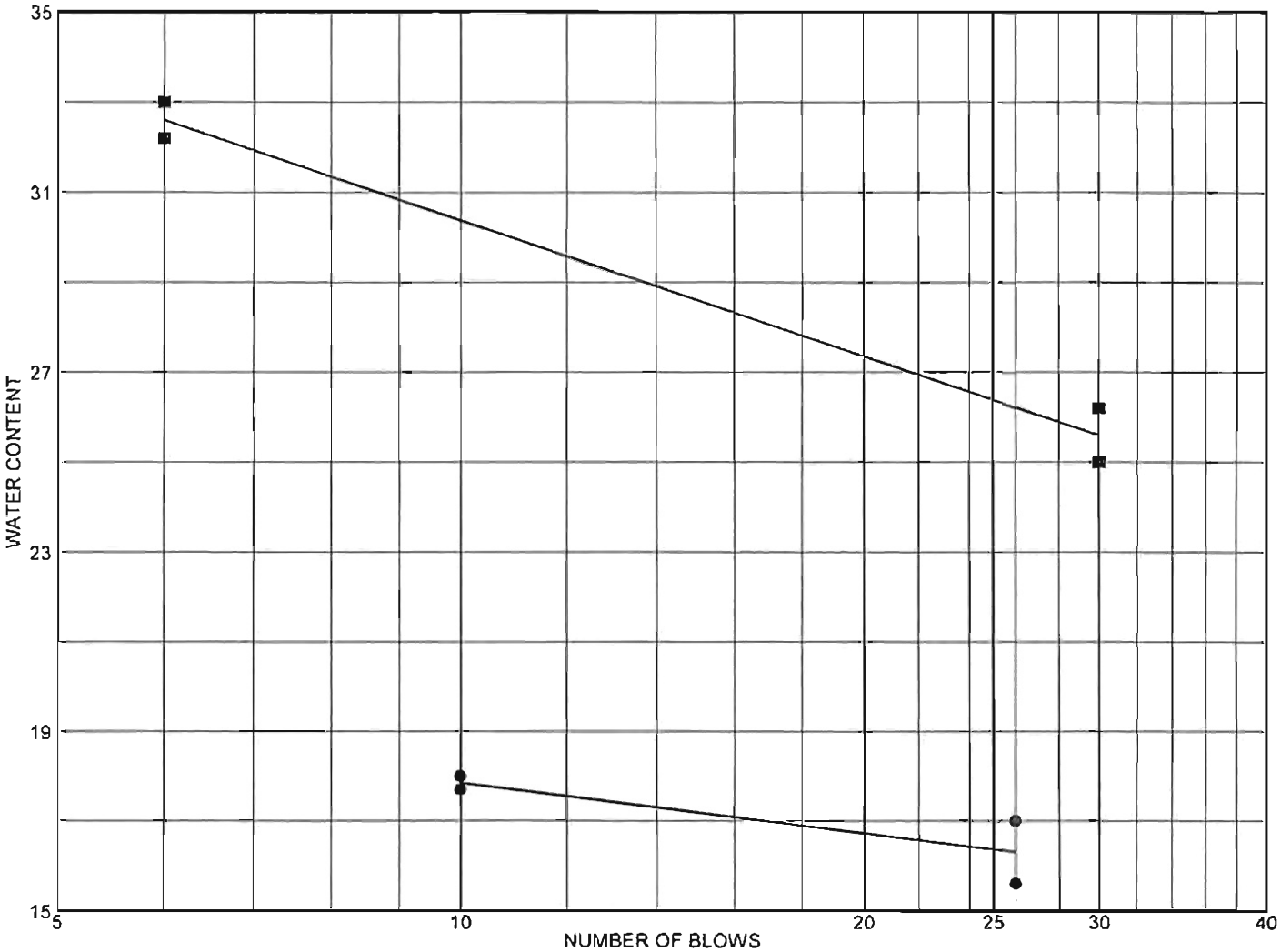

	MATERIAL DESCRIPTION	LL	PL	PI	%<#40	%<#200	USCS
●	Dam Material SM silty sand	16	14	2	92.35	38.77	SM
■	Foundation Material SM Silty sand with gravel	26	22	4	74.75	44.88	SM

Project No. **Client:** Ridgeholm Energy Partners, LLC

Project: Basin 001

Basin 001

● **Location:** John Poc Mine

■ **Source:**

Remarks:

●

■

PERC ENGINEERING CO., INC.

Jasper, Alabama

Figure 11/12/2015

COMPACTION TEST REPORT

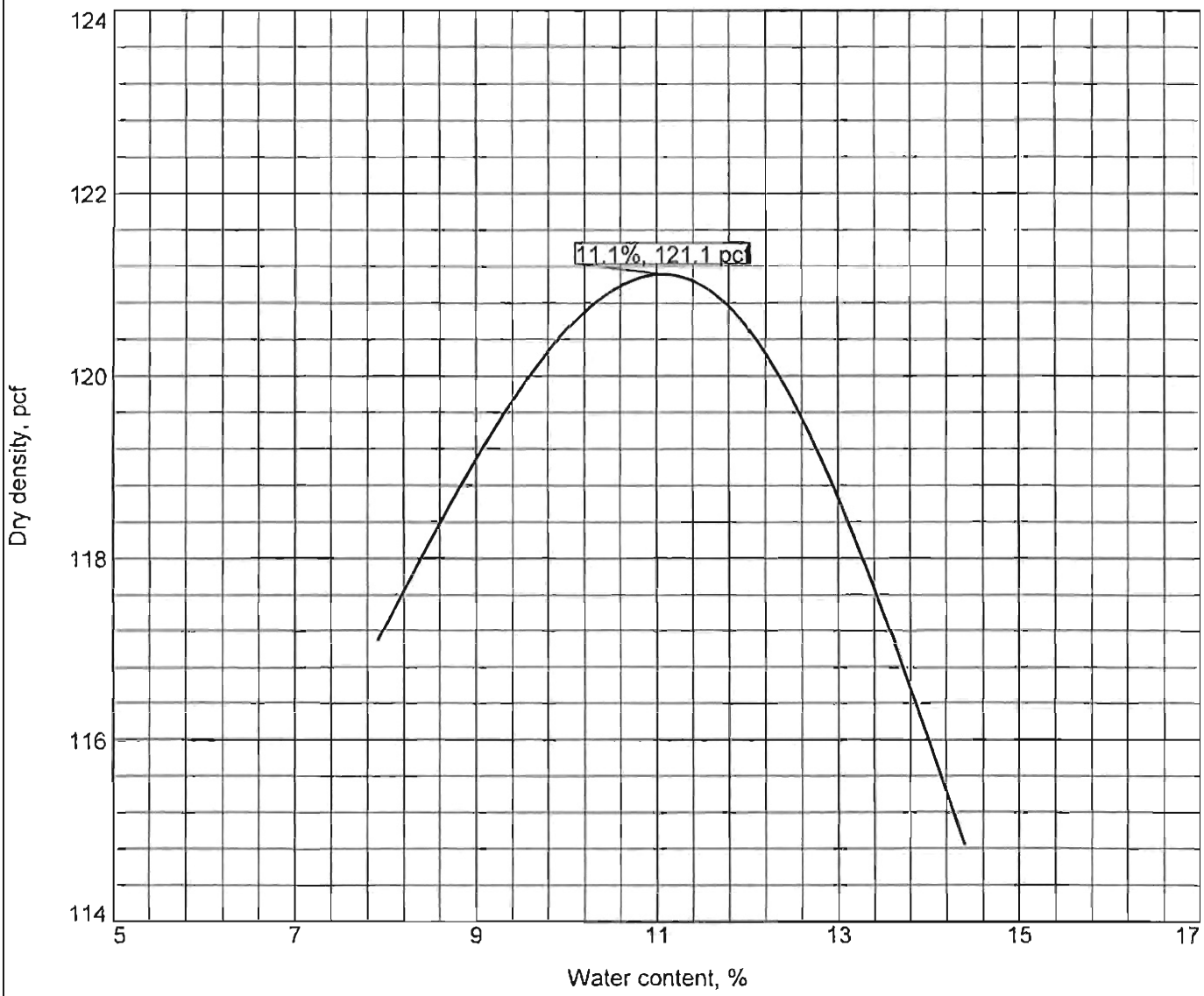

Test specification: ASTM D 698-91 Procedure B Standard

Elev/ Depth	Classification		Nat. Moist.	Sp.G.	LL	PI	% > 3/8 In.	% < No.200
	USCS	AASHTO						
	SM				16	2		38.77

TEST RESULTS	MATERIAL DESCRIPTION
Maximum dry density = 121.1 pcf Optimum moisture = 11.1 %	Dam Material SM silty sand

Project No. **Client:** Ridgeholm Energy Partners, LLC

Project: Basin 001

o **Location:** John Poe Mine

Remarks:

PERC ENGINEERING CO., INC.

Jasper, Alabama

Figure 11/12/2015

Ridgeholm Energy Partners, LLC
John Poe Mine
P- 3981
Basin 001
Stability Analysis

Ridgeholm Energy Partners, LLC
John Poc Mine
P-3981

STABILITY ANALYSIS DATA

METHODOLOGY

The static loading stability analyses were performed using the Simplified Bishop Method. The computer program used was the REAME Slope Stability Program as developed by Dr. Yang H. Huang, P.E. of the University of Kentucky.

SOIL CLASSIFICATION UNITS

The soil type (soil classification) to be used in the construction of the embankment structure of Basin 001(SM and the soil type (soil classification) of the material between the proposed embankment and stiff base of Basin 001(SM) were sampled and analyzed by PERC Engineering Co., Inc. The soil properties used in the stability analysis (SM) type soils, were taken from the U.S. Department of the Interior Bureau of Reclamation Design of Small Dams.*

SOIL PROPERTIES

	UNIFIED CLASS	COHESION (PSF)	ANGLE OF INT. FRICTION	DESIGN DENSITY (PCF)
Foundation Basin 001	SM	273.6	33.0	132.1
Dam Material Basin 001	SM	273.6	33.0	132.1

*United States Department of Interior Bureau of Reclamation Design of Small Dams page 137.

STABILITY ANALYSIS DATA

(Continued)

DESIGN DATA

1) Design Density = 95% of the standard proctor maximum density.
2) Embankment top width: 12.0'.
3) Freeboard minimum = 10% of structure (from top of embankment to normal pool level).
4) Safety factors for embankments with 2.5H:1V slopes, front and back.
5) Basin 001 design height = 7 ft.*
6) DMIN = 0.00
7) All design heights are measured from the top of the embankment to the toe of the upstream slope.
8) * Indicates Basin 001 incised 3 ft.

SAFETY FACTORS

BASIN NUMBER	STATIC SAFETY FACTOR
Basin 001	3.14

FOUNDATIONS AND ABUTMENTS

The foundation and abutments area will be inspected for visible structural deficiencies after clearing and grubbing, and if found they will be treated using sound engineering practices.

JPBASIN0

REAME (Rotational Equilibrium Analysis of Multilayered Embankments)
Implemented on the 16-bit Microcomputers C. F. Hains, Jr. and D. M. Hains
2301 22nd Ave.
Northport, AL 35476
(205)-339-6536

RIDGEHOLM ENERGY PARTNERS JOHN POE MINE BASIN 001

Number of cases to be analyzed 1

Case Number 1

Number of boundary lines= 4
Number of points on boundary lines are: 2 2 3
7

On boundary line no. 1 Point no. and coordinates are:
1 131.973 21.640 2 500.000 .000

On boundary line no. 2 Point no. and coordinates are:
1 200.000 21.640 2 255.100 18.400

On boundary line no. 3 Point no. and coordinates are:
1 131.973 25.640 2 200.000 21.640 3 210.000 25.640

On boundary line no. 4 Point no. and coordinates are:
1 131.973 25.640 2 210.000 25.640 3 217.500 28.640
4 229.500 28.640 5 251.661 19.776
6 255.100 18.400 7 500.000 4.000

Line no. and slope of each segment are:
1 -.059
2 -.059
3 -.059 .400
4 .000 .400 .000 -.400 -.400 -.059

No. of radius control zones= 1 Plot or no plot= 1 No. of seepage cases= 1

Total no. of lines at bottom of radius control zones is: 1

For rad. cont. zone no. 1 Radius decrement= .000 No. of Circles= 5 Id no. for first circle=, 1
Line no.= 1 Begin pt. no.= 1 End pt. no.= 2

Soil no.	Cohesion	F. angle	Unit wt.
1	273.600	33.000	132.100
2	273.600	33.000	132.100
3	.000	.000	62.400

Seismic coefficient= .000 Min. depth of tallest slice= .000
Unit weight of water= 62.400

```
     The factors of safety are determined by the SIMPLIFIED BISHOP method

     NSPG= 1  NSRCH= 0  No. of slices= 10  No. of add. radii= 2

     No. of points on water table for each case=   6

     Under seepage condition 1point no. and            coordinates of water
table are:
    1   131.973    25.640    2   210.000    25.640    3   229.330    23.468
4   251.661    19.776    5   255.100    18.400
    6   500.000     4.000

 point1=(   231.000,    50.000) point2=(   231.000,    30.000) point3=(
256.000,    30.000) NJ=    2 NI=    2
     Automatic search will follow after grid with XINC=    10.000 and YINC=
10.000

 At point (   231.000,    50.000) under seepage    1,the radius and the
corresponding factor of safety are:
         34.124     7.687         31.582     7.916         29.039     8.547
     26.497    10.029         23.955    15.614
     Lowest factor of safety=     7.687 and occurs at radius  =     34.124


 At point (   231.000,    40.000) under seepage    1,the radius and the
corresponding factor of safety are:
         24.141     6.992         21.605     7.137         19.068     7.697
     16.532     9.224         13.995    13.317
     Lowest factor of safety=     6.992 and occurs at radius  =     24.141


 ****WARNING AT NEXT CENTER**** When radius is     4.288
 center of circle lies below ground line or circle does not intercept ground
line properly, or the circle cuts the slope
 very slightly, so a large factor of safety is assigned.

 At point (   231.000,    30.000) under seepage    1,the radius and the
corresponding factor of safety are:
         14.158     7.687         11.691     8.097          9.223     8.928
      6.755    10.015          4.288**********
     Lowest factor of safety=     7.687 and occurs at radius  =     14.158


 At point (   243.500,    50.000) under seepage    1,the radius and the
corresponding factor of safety are:
         34.858     3.403         32.892     3.573         30.927     3.992
     28.962     4.779         26.997     6.496
     Lowest factor of safety=     3.403 and occurs at radius  =     34.858


 At point (   243.500,    40.000) under seepage    1,the radius and the
corresponding factor of safety are:
         24.875     3.244         23.049     3.411         21.224     3.773
     19.398     4.527         17.572     6.749
     Lowest factor of safety=     3.244 and occurs at radius  =     24.875


 At point (   243.500,    30.000) under seepage    1,the radius and the
corresponding factor of safety are:
         14.892     3.629         13.206     3.856         11.520     4.369
      9.834     5.344          8.148     7.833
     Lowest factor of safety=     3.629 and occurs at radius  =     14.892
```

```
 At point (   256.000,    50.000) under seepage    1,the radius and the
corresponding factor of safety are:
         35.591     3.734         34.408     4.031         33.224     4.591
     32.041     5.663         30.857     8.840
     Lowest factor of safety=     3.734 and occurs at radius  =     35.591


 At point (   256.000,    40.000) under seepage    1,the radius and the
corresponding factor of safety are:
         25.609     4.250         24.565     4.636         23.521     5.294
     22.477     6.617         21.433     9.659
     Lowest factor of safety=     4.250 and occurs at radius  =     25.609


 At point (   256.000,    30.000) under seepage    1,the radius and the
corresponding factor of safety are:
         15.626     5.424         14.721     5.896         13.817     6.698
     12.913     8.402         12.009    13.461
     Lowest factor of safety=     5.424 and occurs at radius  =     15.626



 For piezometric line No.    1

 At point (   243.500,    40.000) ,RADIUS    24.875
     the minimum factor of safety is      3.244


 At point (   243.500,    40.000) under seepage    1,the radius and the
corresponding factor of safety are:
         24.875     3.244         23.049     3.411         21.224     3.773
     19.398     4.527         17.572     6.749
     Lowest factor of safety=     3.244 and occurs at radius  =     24.875


 At point (   253.500,    40.000) under seepage    1,the radius and the
corresponding factor of safety are:
         25.462     3.692         24.262     3.962         23.061     4.430
     21.861     5.329         20.661     8.828
     Lowest factor of safety=     3.692 and occurs at radius  =     25.462


 At point (   233.500,    40.000) under seepage    1,the radius and the
corresponding factor of safety are:
         24.288     5.397         21.839     5.581         19.390     6.104
     16.941     7.127         14.492     9.382
     Lowest factor of safety=     5.397 and occurs at radius  =     24.288


 At point (   243.500,    50.000) under seepage    1,the radius and the
corresponding factor of safety are:
         34.858     3.403         32.892     3.573         30.927     3.992
     28.962     4.779         26.997     6.496
     Lowest factor of safety=     3.403 and occurs at radius  =     34.858


 At point (   243.500,    30.000) under seepage    1,the radius and the
corresponding factor of safety are:
         14.892     3.629         13.206     3.856         11.520     4.369
```

```
 9.834     5.344          8.148     7.833
Lowest factor of safety=     3.629 and occurs at radius  =     14.892


At point (   246.000,    40.000) under seepage    1,the radius and the
corresponding factor of safety are:
        25.022     3.141         23.352     3.246         21.683     3.642
    20.014     4.601         18.345     7.135
    Lowest factor of safety=     3.141 and occurs at radius  =     25.022


At point (   248.500,    40.000) under seepage    1,the radius and the
corresponding factor of safety are:
        25.168     3.145         23.655     3.295         22.142     3.677
    20.630     4.719         19.117     7.613
    Lowest factor of safety=     3.145 and occurs at radius  =     25.168


At point (   246.000,    42.500) under seepage    1,the radius and the
corresponding factor of safety are:
        27.517     3.155         25.813     3.253         24.109     3.622
    22.405     4.493         20.701     6.973
    Lowest factor of safety=     3.155 and occurs at radius  =     27.517


At point (   246.000,    37.500) under seepage    1,the radius and the
corresponding factor of safety are:
        22.526     3.140         20.892     3.279         19.257     3.724
    17.623     4.714         15.988     7.319
    Lowest factor of safety=     3.140 and occurs at radius  =     22.526


At point (   246.000,    35.000) under seepage    1,the radius and the
corresponding factor of safety are:
        20.030     3.177         18.431     3.383         16.831     3.849
    15.232     4.857         13.632     7.538
    Lowest factor of safety=     3.177 and occurs at radius  =     20.030


At point (   248.500,    37.500) under seepage    1,the radius and the
corresponding factor of safety are:
        22.673     3.198         21.195     3.360         19.717     3.768
    18.239     4.823         16.761     7.811
    Lowest factor of safety=     3.198 and occurs at radius  =     22.673


At point (   243.500,    37.500) under seepage    1,the radius and the
corresponding factor of safety are:
        22.379     3.242         20.588     3.423         18.798     3.779
    17.007     4.623         15.216     6.927
    Lowest factor of safety=     3.242 and occurs at radius  =     22.379



For piezometric line No.    1

At point (   246.000,    37.500) ,RADIUS    22.526
    the minimum factor of safety is      3.140


1
```

JPBASIN0

Cross section in distorted scale. Numerals indicate boundary line no.
If there area more than 10 bound. lines, alphabets will then be used. P indicates
Piezometric line. If a portion of Piezometric line coincides with
the ground or another boundary line, only the ground or boundary
line will be shown. X indicates intersection of two boundary
lines. * indicates failure surface.
The minimum factor of safety is 3.140

```
3.600E+01 X+++++++++X+++++++++X+++++++++X+++++++++X+++++++++X
          +                                                 +
          +                                                 +
          +                                                 +
          +                                                 +
3.200E+01 X         +         +         +         +         X
          +                                                 +
          +                                                 +
          +                                                 +
          +           444                                   +
2.800E+01 X         +         +         +         +         X
          +                                                 +
          +                                                 +
          +XX44444444X                                      +
          +  33       P  4                                  +
2.400E+01 X    33   +  P*     +         +         +         X
          +      33     P                                   +
          +        3                                        +
          +11       X2   P                                  +
          +  11       22                                    +
2.000E+01 X    11   +   224   +         +         +         X
          +      1        2                                 +
          +       11       X4                               +
          +         11   *   44                             +
          +           11       44                           +
1.600E+01 X         +   1     +  4      +         +         X
          +              11       44                        +
          +                11       44                      +
          +                  11       44                    +
          +                    1        4                   +
1.200E+01 X         +         + 11      +44       +         X
          +                       11       44               +
          +                         11       4              +
          +                           1       44            +
          +                            11       44           +
8.000E+00 X         +         +         +11       44        X
          +                                 11       4       +
          +                                   1       44     +
          +                                    11       44   +
          +                                      11       4  +
4.000E+00 X         +         +         +         11      4 X
          +                                          1       +
          +                                           11     +
          +                                             11   +
          +                                               1  +
 .000E+00 X+++++++++X+++++++++X+++++++++X+++++++++X+++++++1+X
          +                                                 +
          +                                                 +
          +                                                 +
          +                                                 +
-4.000E+00 X+++++++++X+++++++++X+++++++++X+++++++++X+++++++++X
0         1.20E+02  2.00E+02  2.80E+02  3.60E+02  4.40E+02  5.20E+02
```

3. Diversions. (780.29,816.43, 816.44)

Are diversions of overland flow or stream channel diversions proposed?
(X) Yes ( ) No
If yes, complete the following:

(a) Is the diversion to be permanent?
( ) Yes (X) No

(b) Describe in detail the proposed diversion and include plans, maps and cross-sections which comply with 816.43 and 816.44.
See Attachment III-B-3 for Detailed Design Plans of Diversion A-A' and the Permit Map for its location.
Temporary diversions required for the John Poe Mine are shown on the permit and watershed location maps and a typical section of proposed diversions is included in this application and described in the design and construction guidelines for diversions as prepared for Ridgeholm Energy Partners, LLC

Should the need for diversions other than those shown become evident, they will be constructed under the same Guidelines within the area permitted and bonded.

After all mining and reclamation activities are complete the diversions will be reclaimed and revegetated.

See Attachment III-B.-3. for referenced Guidelines.

See Attachment III-B.-2.(a) for Watershed Map.

(c) If diversions are temporary, enclose plans for removal, including a timetable and plans for restoration of vegetation, channel characteristics, etc.

See Attachment III-B.-3.

(d) Enclose approvals of other government agencies, where required.

None required.

Applicant: Ridgeholm Energy Partners, LLC
Mine Name: John Poe Mine
Permit Number: P-3981

Attachment III-B-3

SPECIFICATIONS FOR DIVERSION CHANNELS AND DIVERSION BERMS

1. Temporary diversions shall be constructed to pass safely the peak runoff from a 2-year, 6-hour precipitation event.

2. To protect fills and property and to avoid danger to public health and safety, permanent diversions shall be constructed to pass safely the peak runoff from a 10-year, 6-hour precipitation event. Permanent diversions shall be constructed with gently sloping banks that are stabilized by vegetation.

3. Diversions shall be designed, constructed, and maintained in a manner which prevents additional contributions of suspended solids to stream flow and to runoff outside the permit area, to the extent possible, using the best technology currently available. Appropriate sediment control measures for these diversions may include, but not be limited to, maintenance of appropriate gradients, channel lining, revegetation, roughness structures, and detention basins.

4. No diversion shall be located so as to increase the potential for land slides and no diversion shall be constructed on existing land slides.

5. When no longer needed, each temporary diversion shall be removed and the affected land regraded, topsoiled, and revegetated in accordance with Rules 880-X-10C-.10, 880-X-10C-.11, 880-X-10C-.52 - 880-X-10C-.58, 880-X-10C-.60, and 880-X-10C-.62.

6. Channel linings, when slopes are between 1-3 percent shall consist of both perennial and annual grasses and when slopes are greater than 3 percent, shall consist of riprap or be cut into non-erodible material.

7. Freeboard shall provide protection for transition of flows and for critical areas such as swales and curves along the entire channel length.

8. Energy dissipators shall be installed, when necessary, at discharge points where natural streams and exit velocity of the diversion ditch flow is greater than that of the receiving stream.

9. Excess excavated material not necessary for diversion channel geometry or regrading of the channel shall be disposed of in accordance with Rule 880-X-10C-.36.

10. Topsoil removed from the diversion excavations shall be handled in accordance with Rule 880-X-10C-.07 through 880-X-10C-.11.

11. Diversions shall not be constructed or operated to divert water into underground mines.

12. The embankment or berm foundation area shall be cleared of all organic matter, all surfaces sloped to no steeper than lv:lh and the entire foundation surface scarified.

13. The entire embankment or berm shall be compacted to 95% density, based on standard proctor as outlined in ASTM.

14. The material placed in the berm shall be free of sod, roots, stones over 6 inches in diameter, and other objectionable materials. The fill material shall be placed and spread over the entire fill area, starting at the lowest point of the foundation, in layers not to exceed 12 inches in thickness. Construction of the fill shall be undertaken only at such times as the moisture content of the fill material will permit satisfactory compaction in accordance with paragraph 13.

15. The berm and all disturbed areas shall be seeded with both perennial and annual grasses in order to insure that erosion is minimized. Hay bales or riprap may be placed at the toe of the berm immediately upon completion of construction.

16. All berms shall be examined quarterly for structural weakness, instability, erosion, or other hazardous conditions and maintenance performed as necessary. 4. Disposal of excess spoil. (780.35, 816.71)

Y:\CMO\REP\ .dwg 06/12/06 17:24

Ridgeholm Energy Partners, LLC
John Poe Mine
P-3981

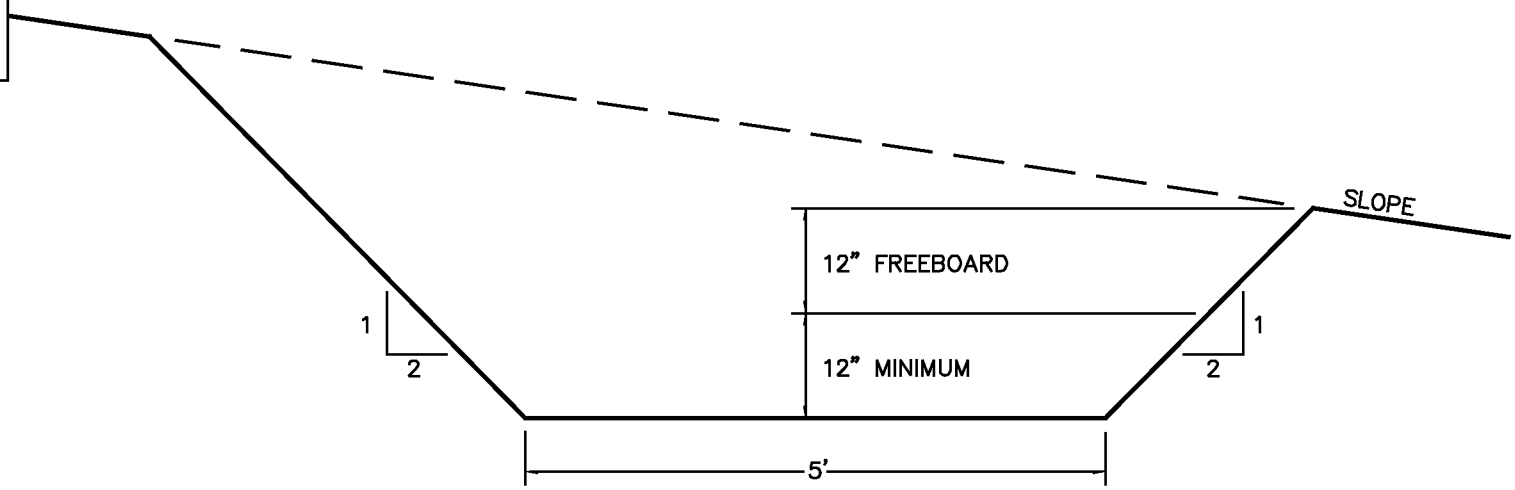

DIVERSION DITCH

TYPICAL DIVERSION CROSS-SECTION
NO SCALE
CHANNEL LINING TO CONSIST OF A MIXTURE OF FESCUE AND BERMUDA GRASS

ATTACHMENT III-B-3
DIVERSION CROSS-SECTION

ATTACHMENT III-B-3
DIVERSION/BERM CROSS SECTION
Ridgeholm Energy Partners, LLC
John Poe Mine
P-3981

DIVERSION/BERM DETAIL

DIVERSION A–A'

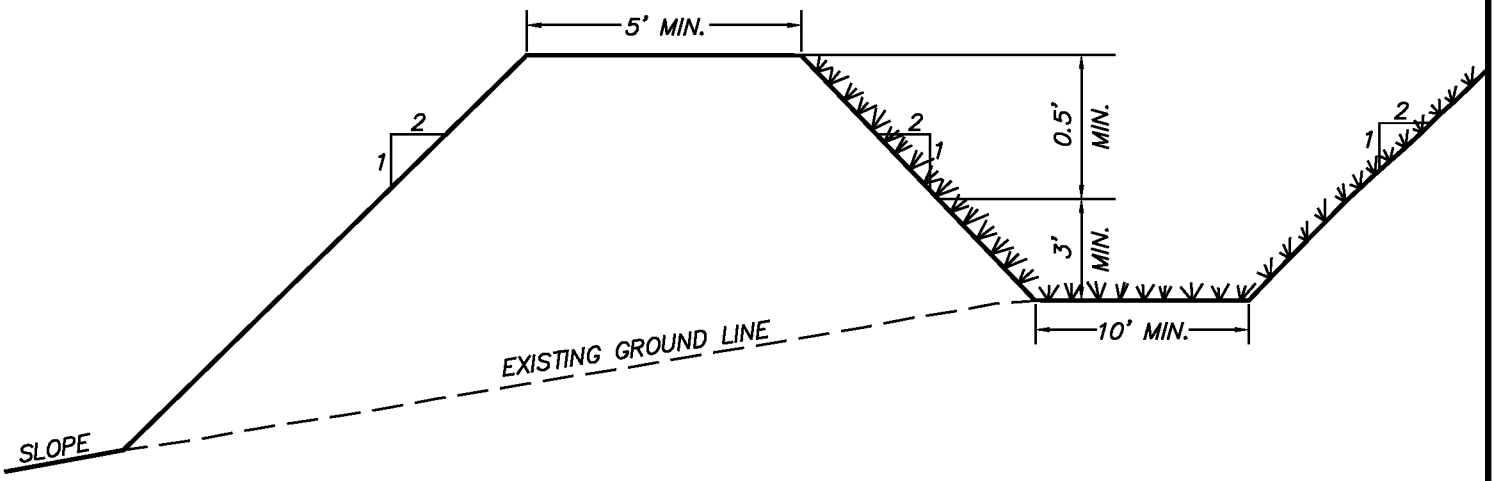

TYPICAL DIVERSION/BERM CROSS SECTION

CHANNEL LINING TO CONSIST OF A MIXTURE OF BERMUDA AND FESCUE GRASSES

Note: The berm material is to consist of a clay material. The Material will be placed in 6 inch lifts and compacted to 95% of the standard proctor density. The standard proctor density will be determined prior to the placement of the material.

PERC ENGINEERING CO., INC.
1606 Highway 78 West Jasper, Alabama 35501
P.O. Box 1712 Jasper, Alabama 35502
(205) 384-5553 Office (205) 384-9491 Fax

Typical Diversion Berm Detail

DRAWN BY: J.J.H. DWG. NAME: BRMTYP1	DATE: 1–23–97
APPROVED BY: S.R.I.	SCALE: NONE

A:\JJH\SRI\BRMTYP1 01/23/97 07:55

HYDROLOGY STUDY FOR
RIDGEHOLM ENERGY PARTNERS, LLC

JOHN POE MINE

P-3981

DEKALB COUNTY, ALABAMA

BY

PERC ENGINEERING CO., INC.

P.O. BOX 1712

JASPER, ALABAMA 35502

DETAILED DESIGN PLANS

DIVERSION A-A'

ATTACHMENT III-B-3

November 25, 2015

PERC
ENGINEERING CO., INC.

Telephone: (205) 384-5553
Facsimile: (205) 295-3114 - Main Building
(205) 295-3115 - Water Lab
Web Address: www.percengineering.com

November 25, 2015

Mr. Stephen Miles, P.E.
Alabama Surface Mining Commission
Post Office Box 2390
Jasper, Alabama 35502-2390

RE: Ridgeholm Energy Partners, LLC
John Poe Mine
P-3981

Dear Stephen:

I hereby certify the attached detailed design plans for Diversion Ditch A-A' for the above referenced location are in accordance with the Regulations of the Alabama Surface Mining Commission as adopted by Act 81-435 of December 18, 1981 and amended to date, and are true and correct to the best of my knowledge and belief.

If you have any questions or required additional information, please feel free to call me at 295-3127 or e-mail lstephens@percengineering.com

Sincerely,
PERC Engineering Co., Inc.

Leslie G. Stephens, P.E., P.L.S.
Alabama Registration No. 14117-E

P.O. Box 1712 • Jasper, Alabama 35502 • 1606 Highway 78 West • Jasper, Alabama 35501

Attachment III-B-3

SPECIFICATIONS FOR DIVERSION CHANNELS AND DIVERSION BERMS

1. Temporary diversions shall be constructed to pass safely the peak runoff from a 2-year, 6-hour precipitation event.

2. To protect fills and property and to avoid danger to public health and safety, permanent diversions shall be constructed to pass safely the peak runoff from a 10-year, 6-hour precipitation event. Permanent diversions shall be constructed with gently sloping banks that are stabilized by vegetation.

3. Diversions shall be designed, constructed, and maintained in a manner which prevents additional contributions of suspended solids to stream flow and to runoff outside the permit area, to the extent possible, using the best technology currently available. Appropriate sediment control measures for these diversions may include, but not be limited to, maintenance of appropriate gradients, channel lining, revegetation, roughness structures, and detention basins.

4. No diversion shall be located so as to increase the potential for land slides and no diversion shall be constructed on existing land slides.

5. When no longer needed, each temporary diversion shall be removed and the affected land regraded, topsoiled, and revegetated in accordance with Rules 880-X-10C-.10, 880-X-10C-.11, 880-X-10C-.52 - 880-X-10C-.58, 880-X-10C-.60, and 880-X-10C-.62.

6. Channel linings, when slopes are between 1-3 percent shall consist of both perennial and annual grasses and when slopes are greater than 3 percent, shall consist of riprap or be cut into non-erodible material.

7. Freeboard shall provide protection for transition of flows and for critical areas such as swales and curves along the entire channel length.

8. Energy dissipators shall be installed, when necessary, at discharge points where natural streams and exit velocity of the diversion ditch flow is greater than that of the receiving stream.

9. Excess excavated material not necessary for diversion channel geometry or regrading of the channel shall be disposed of in accordance with Rule 880-X-10C-.36.

10. Topsoil removed from the diversion excavations shall be handled in accordance with Rule 880-X-10C-.07 through 880-X-10C-.11.

11. Diversions shall not be constructed or operated to divert water into underground mines.

12. The embankment or berm foundation area shall be cleared of all organic matter, all surfaces sloped to no steeper than lv:lh and the entire foundation surface scarified.

13. The entire embankment or berm shall be compacted to 95% density, based on standard proctor as outlined in ASTM.

14. The material placed in the berm shall be free of sod, roots, stones over 6 inches in diameter, and other objectionable materials. The fill material shall be placed and spread over the entire fill area, starting at the lowest point of the foundation, in layers not to exceed 12 inches in thickness. Construction of the fill shall be undertaken only at such times as the moisture content of the fill material will permit satisfactory compaction in accordance with paragraph 13.

15. The berm and all disturbed areas shall be seeded with both perennial and annual grasses in order to insure that erosion is minimized. Hay bales or riprap may be placed at the toe of the berm immediately upon completion of construction.

16. All berms shall be examined quarterly for structural weakness, instability, erosion, or other hazardous conditions and maintenance performed as necessary.

Notes

Station	% Slope	Channel Bottom Minimum Width	Channel Depth with 0.5' Freeboard	Channel Lining
0+00 to 3+58	0.51	10'	2.3'	Grass Mixture
3+58 to4+38	7.48	10'	1.3'	Bermuda Grass
4+38 to 5+63	15.30	10'	1.14'	Bermuda Grass
5+63 to 6+38	6.99	10'	1.3'	Bermuda Grass
6+38 to 7+00	3.90	10'	1.7'	Bermuda Grass
7+00 to 10+77	0.59	10'	2.8'	Grass Mixture

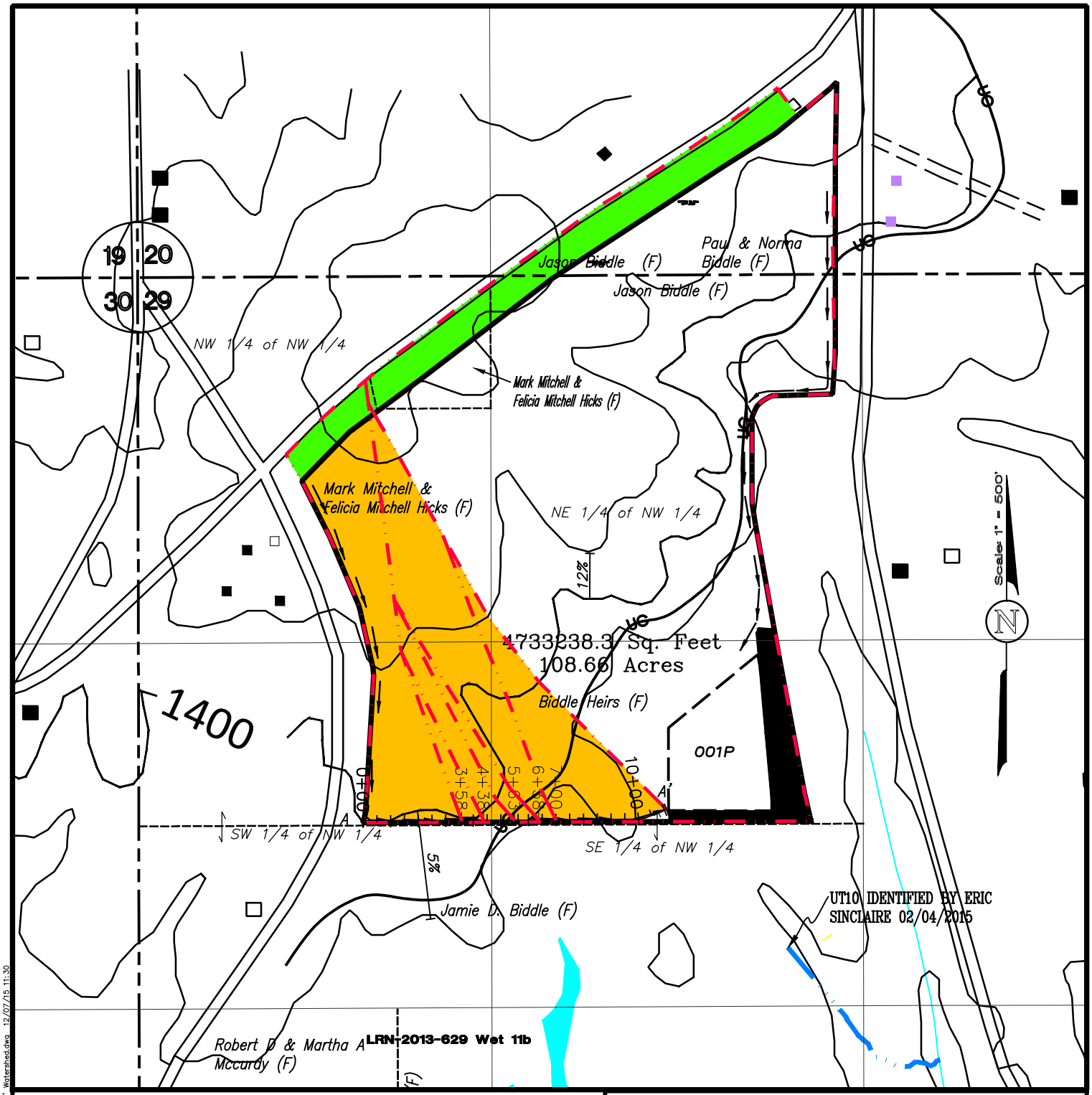

WATERSHED BOUNDARY

DIVERSION DITCH

HIGHWAY RIGHT OF WAY, CURVE NUMBER, 74

GRADED & BARE, CURVE NUMBER, 81

UPPER CLIFF COAL SEAM OUTCROP

PERC ENGINEERING CO., INC.
1606 Highway 78 West Jasper, Alabama 35501
P.O. Box 1712 Jasper, Alabama 35502
(205) 384-5853 Office (205) 295-3116 Fax

Ridgeholm Energy Partners, LLC
John Poe Mine P-3981
Diversion A-A' Watershed Map
Township 5 South, Range 9 East
Dekalb County, Alabama

DRAWN BY: S.W.L. DWG. NAME: DiversionA-A' Watershed	DATE: 12/07/15
APPROVED BY: L.G.S.	SCALE: 1"=500'

V:\Mining\Ridgeholm Energy Partners\John Poe Mine P-3981\BASIN 001P\Diversion A-A' Watershed.dwg 12/07/15 11:30

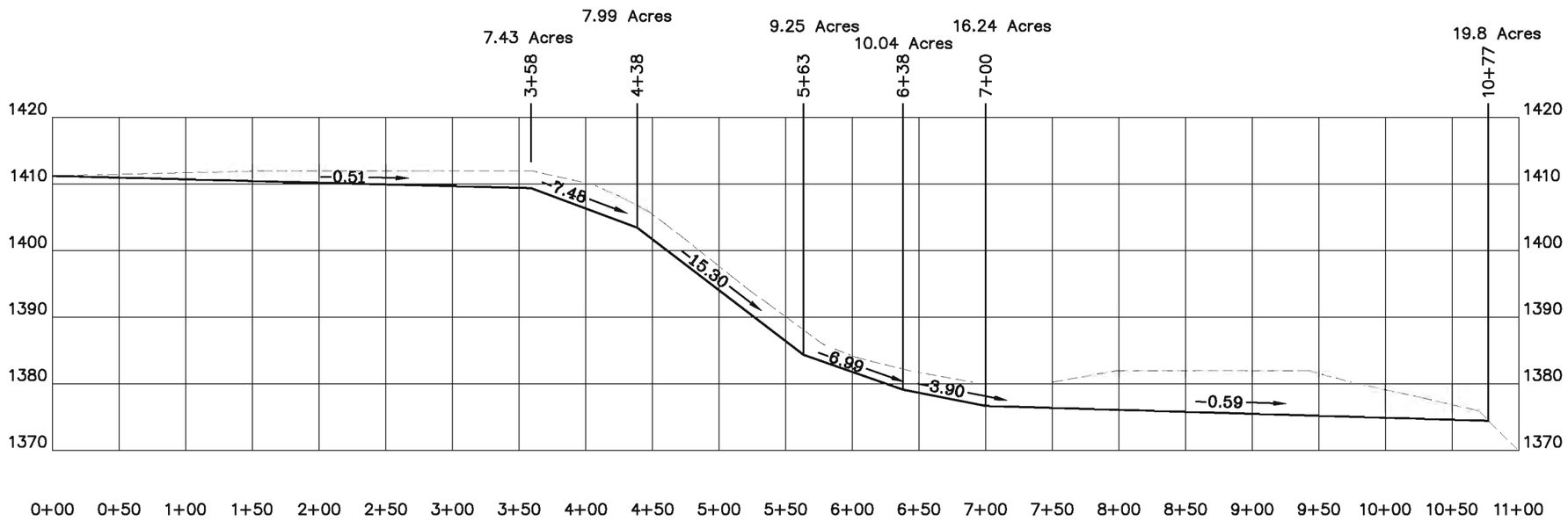

HORZ. SCALE 1" = 50'
VERT. SCALE 1" = 10'

LEGEND

- - - - - - - - - - EXISTING GROUND SURFACE

———————— PROPOSED FLOWLINE OF DIVERSION DITCH

PERC ENGINEERING CO., INC.

RIDGEHOLM ENERGY PARTNERS LLC
JOHN POE MINE
P-3981
DIVERSION A-A' PROFILE

DRAWN BY: L.G.S. DWG. NAME: DIVERSION A-A'	DATE: 12/01/2015
APPROVED BY: L.G.S.	SCALE: AS NOTED

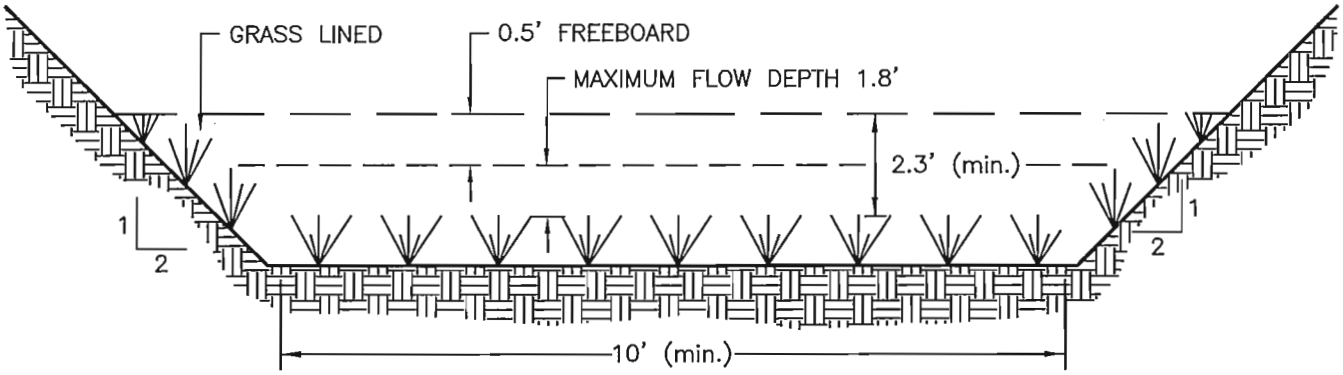

GRASS LINING TO CONSIST OF GRASS MIXTURE.

CUT SECTION

0+00 to 3+58

PERC ENGINEERING CO., INC.
1606 Highway 78 West Jasper, Alabama 35501
P.O. Box 1712 Jasper, Alabama 35502
(205) 384-3553 Office (205) 384-9491 Fax

RIDGEHOLM ENERGY PARTNERS, LLC
JOHN POE MINE
P-3981
DIVERSION A-A'
(0+00 TO 3+58)

DRAWN BY: L.G.S. DWG. NAME: RHJPDIVAA'	DATE: 12/07/2015
APPROVED BY: L.G.S.	SCALE: NONE

x:\Mining\Ridgeholm Energy Partners\John Poe Mine P-3981\Diversion A-A'\RHJPDIVAA'.dwg 12/07/15 10:13

Copyright 1998 -2010 Pamela J. Schwab

Ridgeholm Energy Partners LLC
John Poe Mine
P-3981
Diversion A-A'
0+00 to 3+58

4.0 Inch, 10 Year-6 Hour

NRCS Type II

LGS

PERC ENGINEERING CO., INC.
P. O. BOX 1712
1606 HIGHWAY 78 WEST
JASPER ALABAMA 35502

Phone: 205-384-5553
Email: LSTEPHENS@PERCENGINEERING.COM

General Information

Storm Information:

Storm Type:	NRCS Type II
Design Storm:	10 yr - 6 hr
Rainfall Depth:	4.000 inches

Structure Networking:

Type	Stru #	(flows into)	Stru #	Musk. K (hrs)	Musk. X	Description
Channel	#1	==>	End	0.000	0.000	Diversion A-A' 0+00 to 3+58

#1
Chan'l

Structure Summary:

	Immediate Contributing Area (ac)	Total Contributing Area (ac)	Peak Discharge (cfs)	Total Runoff Volume (ac-ft)
#1	7.430	7.430	23.25	1.27

Structure Detail:

Structure #1 (Vegetated Channel)

Diversion A-A' 0+00 to 3+58

Trapezoidal Vegetated Channel Inputs:

Material: Grass mixture

Bottom Width (ft)	Left Sideslope Ratio	Right Sideslope Ratio	Slope (%)	Retardance Classes	Freeboard Depth (ft)	Freeboard % of Depth	Freeboard Mult. x (VxD)	Limiting Velocity (fps)
10.00	2.0:1	2.0:1	0.5	D, B	0.50			5.0

Vegetated Channel Results:

	Stability Class D w/o Freeboard	Stability Class D w/ Freeboard	Capacity Class B w/o Freeboard	Capacity Class B w/ Freeboard
Design Discharge:	23.25 cfs		23.25 cfs	
Depth:	1.02 ft	1.52 ft	1.76 ft	2.26 ft
Top Width:	14.10 ft	16.10 ft	17.04 ft	19.04 ft
Velocity:	1.88 fps		0.98 fps	
X-Section Area:	12.35 sq ft		23.78 sq ft	
Hydraulic Radius:	0.847 ft		1.331 ft	
Froude Number:	0.35		0.15	
Roughness Coefficient:	0.0506		0.1316	

Subwatershed Hydrology Detail:

Stru #	SWS #	SWS Area (ac)	Time of Conc (hrs)	Musk K (hrs)	Musk X	Curve Number	UHS	Peak Discharge (cfs)	Runoff Volume (ac-ft)
#1	1	6.430	0.109	0.000	0.000	81.000	F	20.89	1.133
	2	1.000	0.020	0.095	0.378	74.000	M	2.64	0.132
	Σ	**7.430**						**23.25**	**1.265**

Subwatershed Time of Concentration Details:

Stru #	SWS #	Land Flow Condition	Slope (%)	Vert. Dist. (ft)	Horiz. Dist. (ft)	Velocity (fps)	Time (hrs)
#1	1	5. Nearly bare and untilled, and alluvial valley fans	2.00	2.00	100.00	1.410	0.019
		8. Large gullies, diversions, and low flowing streams	2.69	43.00	1,600.00	4.910	0.090
#1	**1**	**Time of Concentration:**					**0.109**
#1	2	3. Short grass pasture	3.00	3.00	100.00	1.380	0.020
#1	**2**	**Time of Concentration:**					**0.020**

Subwatershed Muskingum Routing Details:

Stru #	SWS #	Land Flow Condition	Slope (%)	Vert. Dist. (ft)	Horiz. Dist. (ft)	Velocity (fps)	Time (hrs)
#1	2	8. Large gullies, diversions, and low flowing streams	3.06	55.00	1,800.00	5.240	0.095
#1	**2**	**Muskingum K:**					**0.095**

Subwatershed Hydrology Detail:

Stru #	SWS #	SWS Area (ac)	Time of Conc (hrs)	Musk K (hrs)	Musk X	Curve Number	UHS	Peak Discharge (cfs)	Runoff Volume (ac-ft)
#1	1	18.800	0.102	0.000	0.000	81.000	F	61.09	3.312
	2	1.000	0.020	0.095	0.378	74.000	M	2.64	0.132
	Σ	**19.800**						**63.44**	**3.444**

Subwatershed Time of Concentration Details:

Stru #	SWS #	Land Flow Condition	Slope (%)	Vert. Dist. (ft)	Horiz. Dist. (ft)	Velocity (fps)	Time (hrs)
#1	1	5. Nearly bare and untilled, and alluvial valley fans	2.00	2.00	100.00	1.410	0.019
		8. Large gullies, diversions, and low flowing streams	3.53	60.00	1,700.00	5.630	0.083
#1	**1**	**Time of Concentration:**					**0.102**
#1	2	3. Short grass pasture	3.00	3.00	100.00	1.380	0.020
#1	**2**	**Time of Concentration:**					**0.020**

Subwatershed Muskingum Routing Details:

Stru #	SWS #	Land Flow Condition	Slope (%)	Vert. Dist. (ft)	Horiz. Dist. (ft)	Velocity (fps)	Time (hrs)
#1	2	8. Large gullies, diversions, and low flowing streams	3.06	55.00	1,800.00	5.240	0.095
#1	**2**	**Muskingum K:**					**0.095**

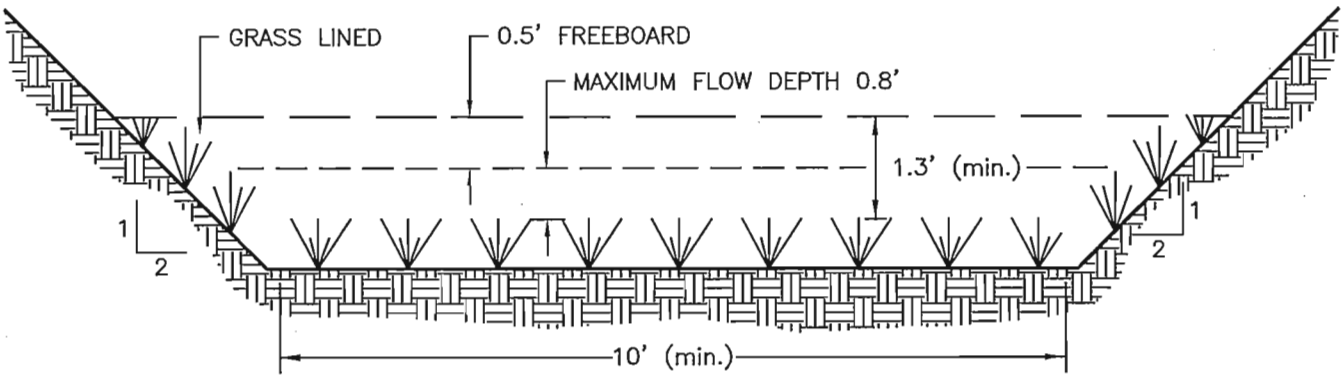

GRASS LINING TO CONSIST OF BERMUDA GRASS.

CUT SECTION

3+58 to 4+38

PERC ENGINEERING CO., INC.
1606 Highway 78 West Jasper, Alabama 35501
P.O. Box 1712 Jasper, Alabama 35502
(205) 384-5553 Office (205) 384-9491 Fax

RIDGEHOLM ENERGY PARTNERS, LLC
JOHN POE MINE
P-3981
DIVERSION A-A'
(3+58 to 4+38)

DRAWN BY:	L.G.S.	DATE:	12/07/2015
DWG. NAME:	RHJPDIVAA'		
APPROVED BY:	L.G.S.	SCALE:	NONE

V:\Mining\Ridgeholm Energy Partners\John Poe Mine P-3981\Diversion A-A'\RHJPDIVAA'.dwg 12/07/15 10:47

Copyright 1998 -2010 Pamela L Schwab

Ridgeholm Energy Partners LLC
John Poe Mine
P-3981
Diversion A-A'
3+58 to 4+38

4.0 Inch, 10 Year-6 Hour

NRCS Type II

LGS

PERC ENGINEERING CO., INC.
P. O. BOX 1712
1606 HIGHWAY 78 WEST
JASPER ALABAMA 35502

Phone: 205-384-5553
Email: LSTEPHENS@PERCENGINEERING.COM

General Information

Storm Information:

Storm Type:	NRCS Type II
Design Storm:	10 yr - 6 hr
Rainfall Depth:	4.000 inches

Structure Networking:

Type	Stru #	(flows into)	Stru #	Musk. K (hrs)	Musk. X	Description
Channel	#1	==>	End	0.000	0.000	Diversion A-A' 3+58 to 4+38

#1
Chan'l

Structure Summary:

	Immediate Contributing Area (ac)	Total Contributing Area (ac)	Peak Discharge (cfs)	Total Runoff Volume (ac-ft)
#1	7.990	7.990	25.07	1.36

Structure Detail:

Structure #1 (Vegetated Channel)

Diversion A-A' 3+58 to 4+38

Trapezoidal Vegetated Channel Inputs:

Material: Bermuda grass

Bottom Width (ft)	Left Sideslope Ratio	Right Sideslope Ratio	Slope (%)	Retardance Classes	Freeboard Depth (ft)	Freeboard % of Depth	Freeboard Mult. x (VxD)	Limiting Velocity (fps)
10.00	2.0:1	2.0:1	7.5	D, B	0.50			7.0

Vegetated Channel Results:

	Stability Class D w/o Freeboard	Stability Class D w/ Freeboard	Capacity Class B w/o Freeboard	Capacity Class B w/ Freeboard
Design Discharge:	25.07 cfs		25.07 cfs	
Depth:	0.47 ft	0.97 ft	0.77 ft	1.27 ft
Top Width:	11.87 ft	13.87 ft	13.07 ft	15.07 ft
Velocity:	4.91 fps		2.83 fps	
X-Section Area:	5.11 sq ft		8.85 sq ft	
Hydraulic Radius:	0.422 ft		0.659 ft	
Froude Number:	1.32		0.61	
Roughness Coefficient:	0.0467		0.1089	

Subwatershed Hydrology Detail:

Stru #	SWS #	SWS Area (ac)	Time of Conc (hrs)	Musk K (hrs)	Musk X	Curve Number	UHS	Peak Discharge (cfs)	Runoff Volume (ac-ft)
#1	1	6.990	0.105	0.000	0.000	81.000	F	22.71	1.231
	2	1.000	0.020	0.095	0.378	74.000	M	2.64	0.132
	Σ	**7.990**						**25.07**	**1.364**

Subwatershed Time of Concentration Details:

Stru #	SWS #	Land Flow Condition	Slope (%)	Vert. Dist. (ft)	Horiz. Dist. (ft)	Velocity (fps)	Time (hrs)
#1	1	5. Nearly bare and untilled, and alluvial valley fans	2.00	2.00	100.00	1.410	0.019
		8. Large gullies, diversions, and low flowing streams	2.77	43.00	1,550.00	4.990	0.086
#1	**1**	**Time of Concentration:**					**0.105**
#1	2	3. Short grass pasture	3.00	3.00	100.00	1.380	0.020
#1	**2**	**Time of Concentration:**					**0.020**

Subwatershed Muskingum Routing Details:

Stru #	SWS #	Land Flow Condition	Slope (%)	Vert. Dist. (ft)	Horiz. Dist. (ft)	Velocity (fps)	Time (hrs)
#1	2	8. Large gullies, diversions, and low flowing streams	3.06	55.00	1,800.00	5.240	0.095
#1	**2**	**Muskingum K:**					**0.095**

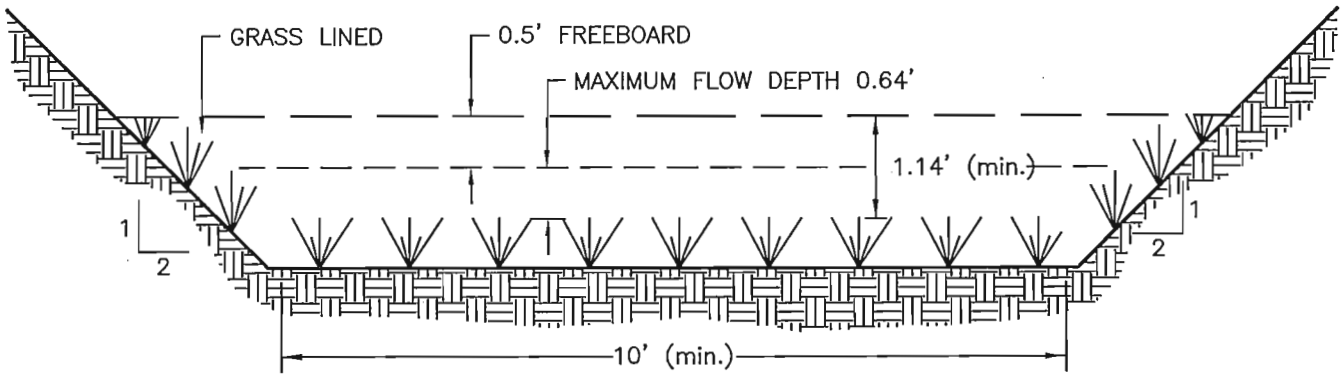

GRASS LINING TO CONSIST OF BERMUDA GRASS.

CUT SECTION

4+38 to 5+63

PERC ENGINEERING CO., INC.
1906 Highway 78 West Jasper, Alabama 35501
P.O. Box 1712 Jasper, Alabama 35502
(205) 384-5553 Office (205) 384-9491 Fax

RIDGEHOLM ENERGY PARTNERS, LLC
JOHN POE MINE
P-3981
DIVERSION A-A'
(4+38 TO 5+63)

DRAWN BY:	L.G.S.	DATE:	12/07/2015
DWG. NAME:	RHJPDIVAA'		
APPROVED BY:	L.G.S.	SCALE:	NONE

V:\Mining\Ridgeholm Energy Partners\John Poe Mine P-3981\Diversion A-A'\RHJPDIVAA'.dwg 12/07/15 11:53

Copyright 1998 -2010 Pamela L Schwab

Ridgeholm Energy Partners LLC
John Poe Mine
P-3981
Diversion A-A'
4+38 to 5+63

4.0 Inch, 10 Year-6 Hour

NRCS Type II

LGS

PERC ENGINEERING CO., INC.
P. O. BOX 1712
1606 HIGHWAY 78 WEST
JASPER ALABAMA 35502

Phone: 205-384-5553
Email: LSTEPHENS@PERCENGINEERING.COM

General Information

Storm Information:

Storm Type:	NRCS Type II
Design Storm:	10 yr - 6 hr
Rainfall Depth:	4.000 inches

Structure Networking:

Type	Stru #	(flows into)	Stru #	Musk. K (hrs)	Musk. X	Description
Channel	#1	==>	End	0.000	0.000	Diversion A-A' 4+38 to 5+63

#1
Chan'l

Structure Summary:

	Immediate Contributing Area (ac)	Total Contributing Area (ac)	Peak Discharge (cfs)	Total Runoff Volume (ac-ft)
#1	9.250	9.250	29.16	1.59

Structure Detail:

Structure #1 (Vegetated Channel)

Diversion A-A' 4+38 to 5+63

Trapezoidal Vegetated Channel Inputs:

Material: Bermuda grass

Bottom Width (ft)	Left Sideslope Ratio	Right Sideslope Ratio	Slope (%)	Retardance Classes	Freeboard Depth (ft)	Freeboard % of Depth	Freeboard Mult. x (VxD)	Limiting Velocity (fps)
10.00	2.0:1	2.0:1	15.3	C, B	0.50			6.0

Vegetated Channel Results:

	Stability Class C w/o Freeboard	Stability Class C w/ Freeboard	Capacity Class B w/o Freeboard	Capacity Class B w/ Freeboard
Design Discharge:	29.16 cfs		29.16 cfs	
Depth:	0.47 ft	0.97 ft	0.64 ft	1.14 ft
Top Width:	11.90 ft	13.90 ft	12.56 ft	14.56 ft
Velocity:	5.62 fps		4.03 fps	
X-Section Area:	5.19 sq ft		7.23 sq ft	
Hydraulic Radius:	0.428 ft		0.562 ft	
Froude Number:	1.50		0.94	
Roughness Coefficient:	0.0587		0.0983	

Subwatershed Hydrology Detail:

Stru #	SWS #	SWS Area (ac)	Time of Conc (hrs)	Musk K (hrs)	Musk X	Curve Number	UHS	Peak Discharge (cfs)	Runoff Volume (ac-ft)
#1	1	8.250	0.084	0.000	0.000	81.000	F	26.81	1.453
	2	1.000	0.020	0.095	0.378	74.000	M	2.64	0.132
	Σ	**9.250**						**29.16**	**1.586**

Subwatershed Time of Concentration Details:

Stru #	SWS #	Land Flow Condition	Slope (%)	Vert. Dist. (ft)	Horiz. Dist. (ft)	Velocity (fps)	Time (hrs)
#1	1	5. Nearly bare and untilled, and alluvial valley fans	2.00	2.00	100.00	1.410	0.019
		8. Large gullies, diversions, and low flowing streams	3.93	55.00	1,400.02	5.940	0.065
#1	**1**	**Time of Concentration:**					**0.084**
#1	2	3. Short grass pasture	3.00	3.00	100.00	1.380	0.020
#1	**2**	**Time of Concentration:**					**0.020**

Subwatershed Muskingum Routing Details:

Stru #	SWS #	Land Flow Condition	Slope (%)	Vert. Dist. (ft)	Horiz. Dist. (ft)	Velocity (fps)	Time (hrs)
#1	2	8. Large gullies, diversions, and low flowing streams	3.06	55.00	1,800.00	5.240	0.095
#1	**2**	**Muskingum K:**					**0.095**

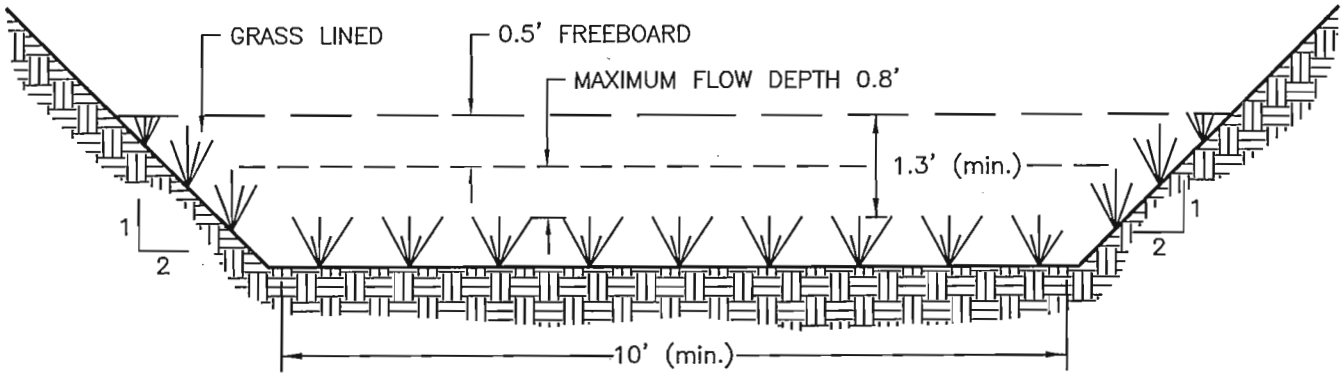

GRASS LINING TO CONSIST OF BERMUDA GRASS.

CUT SECTION

5+63 to 6+38

PERC ENGINEERING CO., INC.
1806 Highway 78 West Jasper, Alabama 35501
P.O. Box 1712 Jasper, Alabama 35502
(205) 384-5553 Office (205) 384-9491 Fax

RIDGEHOLM ENERGY PARTNERS, LLC
JOHN POE MINE
P-3981
DIVERSION A-A'
(5+63 to 6+38)

DRAWN BY: L.G.S. DWG. NAME: RHJPDIVAA'	DATE: 12/07/2015
APPROVED BY: L.G.S.	SCALE: NONE

V:\Mining\Ridgeholm Energy Partners\John Poe Mine P-3981\Diversion A-A'\RHJPDIVAA'.dwg 12/07/15 11:08

Copyright 1998 -2010 Pamela L Schwab

Ridgeholm Energy Partners LLC

John Poe Mine

P-3981

Diversion A-A'

5+63 TO 6+38

4.0 Inch, 10 Year-6 Hour

NRCS Type II

LGS

PERC ENGINEERING CO., INC.
P. O. BOX 1712
1606 HIGHWAY 78 WEST
JASPER ALABAMA 35502

Phone: 205-384-5553
Email: LSTEPHENS@PERCENGINEERING.COM

General Information

Storm Information:

Storm Type:	NRCS Type II
Design Storm:	10 yr - 6 hr
Rainfall Depth:	4.000 inches

Structure Networking:

Type	Stru #	(flows into)	Stru #	Musk. K (hrs)	Musk. X	Description
Channel	#1	==>	End	0.000	0.000	Diversion A-A' 5+63 to 6+38

#1
Chan'l

Structure Summary:

	Immediate Contributing Area (ac)	Total Contributing Area (ac)	Peak Discharge (cfs)	Total Runoff Volume (ac-ft)
#1	10.040	10.040	31.73	1.72

Structure Detail:

Structure #1 (Vegetated Channel)

Diversion A-A' 5+63 to 6+38

Trapezoidal Vegetated Channel Inputs:

Material: Bermuda grass

Bottom Width (ft)	Left Sideslope Ratio	Right Sideslope Ratio	Slope (%)	Retardance Classes	Freeboard Depth (ft)	Freeboard % of Depth	Freeboard Mult. x (VxD)	Limiting Velocity (fps)
10.00	2.0:1	2.0:1	7.0	D, B	0.50			7.0

Vegetated Channel Results:

	Stability Class D w/o Freeboard	Stability Class D w/ Freeboard	Capacity Class B w/o Freeboard	Capacity Class B w/ Freeboard
Design Discharge:	31.73 cfs		31.73 cfs	
Depth:	0.53 ft	1.03 ft	0.84 ft	1.34 ft
Top Width:	12.11 ft	14.11 ft	13.36 ft	15.36 ft
Velocity:	5.45 fps		3.23 fps	
X-Section Area:	5.83 sq ft		9.82 sq ft	
Hydraulic Radius:	0.471 ft		0.714 ft	
Froude Number:	1.38		0.66	
Roughness Coefficient:	0.0437		0.0974	

Subwatershed Hydrology Detail:

Stru #	SWS #	SWS Area (ac)	Time of Conc (hrs)	Musk K (hrs)	Musk X	Curve Number	UHS	Peak Discharge (cfs)	Runoff Volume (ac-ft)
#1	1	9.040	0.094	0.000	0.000	81.000	F	29.37	1.592
	2	1.000	0.020	0.095	0.378	74.000	M	2.64	0.132
	Σ	**10.040**						**31.73**	**1.725**

Subwatershed Time of Concentration Details:

Stru #	SWS #	Land Flow Condition	Slope (%)	Vert. Dist. (ft)	Horiz. Dist. (ft)	Velocity (fps)	Time (hrs)
#1	1	5. Nearly bare and untilled, and alluvial valley fans	2.00	2.00	100.00	1.410	0.019
		8. Large gullies, diversions, and low flowing streams	3.88	62.00	1,600.00	5.900	0.075
#1	**1**	**Time of Concentration:**					**0.094**
#1	2	3. Short grass pasture	3.00	3.00	100.00	1.380	0.020
#1	**2**	**Time of Concentration:**					**0.020**

Subwatershed Muskingum Routing Details:

Stru #	SWS #	Land Flow Condition	Slope (%)	Vert. Dist. (ft)	Horiz. Dist. (ft)	Velocity (fps)	Time (hrs)
#1	2	8. Large gullies, diversions, and low flowing streams	3.06	55.00	1,800.00	5.240	0.095
#1	**2**	**Muskingum K:**					**0.095**

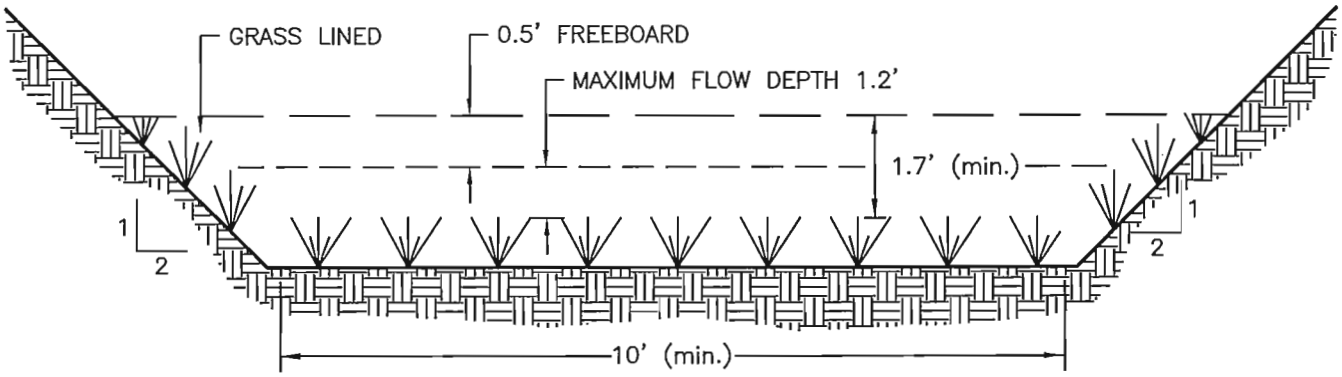

GRASS LINING TO CONSIST OF BERMUDA GRASS.

CUT SECTION

6+38 TO 7+00

PERC ENGINEERING CO., INC.
1808 Highway 78 West Jasper, Alabama 35501
P.O. Box 1712 Jasper, Alabama 35502
(205) 384-3553 Office (205) 384-9491 Fax

RIDGEHOLM ENERGY PARTNERS, LLC
JOHN POE MINE
P-3981
DIVERSION A-A'
(6+38 TO 7+00)

DRAWN BY: L.G.S. DWG. NAME: RHJPDIVAA'	DATE: 12/07/2015
APPROVED BY: L.G.S.	SCALE: NONE

V:\Mining\Ridgeholm Energy Partners\John Poe Mine P-3981\Diversion A-A'\RHJPDIVAA'.dwg 12/07/15 11:08

Copyright 1998 -2010 Pamela L Schwab

Ridgeholm Energy Partners LLC

John Poe Mine

P-3981

Diversion A-A'

6+38 TO 7+00

4.0 Inch, 10 Year-6 Hour

NRCS Type II

LGS

PERC ENGINEERING CO., INC.
P. O. BOX 1712
1606 HIGHWAY 78 WEST
JASPER ALABAMA 35502

Phone: 205-384-5553
Email: LSTEPHENS@PERCENGINEERING.COM

General Information

Storm Information:

Storm Type:	NRCS Type II
Design Storm:	10 yr - 6 hr
Rainfall Depth:	4.000 inches

Structure Networking:

Type	Stru #	(flows into)	Stru #	Musk. K (hrs)	Musk. X	Description
Channel	#1	==>	End	0.000	0.000	Diversion A-A' 6+38 to 7+00

#1
Chan'l

Structure Summary:

	Immediate Contributing Area (ac)	Total Contributing Area (ac)	Peak Discharge (cfs)	Total Runoff Volume (ac-ft)
#1	16.240	16.240	51.87	2.82

Structure Detail:

Structure #1 (Vegetated Channel)

Diversion A-A' 6+38 to 7+00

Trapezoidal Vegetated Channel Inputs:

Material: Bermuda grass

Bottom Width (ft)	Left Sideslope Ratio	Right Sideslope Ratio	Slope (%)	Retardance Classes	Freeboard Depth (ft)	Freeboard % of Depth	Freeboard Mult. x (VxD)	Limiting Velocity (fps)
10.00	2.0:1	2.0:1	3.9	D, B	0.50			8.0

Vegetated Channel Results:

	Stability Class D w/o Freeboard	Stability Class D w/ Freeboard	Capacity Class B w/o Freeboard	Capacity Class B w/ Freeboard
Design Discharge:	51.87 cfs		51.87 cfs	
Depth:	0.77 ft	1.27 ft	1.17 ft	1.67 ft
Top Width:	13.10 ft	15.10 ft	14.69 ft	16.69 ft
Velocity:	5.80 fps		3.58 fps	
X-Section Area:	8.95 sq ft		14.48 sq ft	
Hydraulic Radius:	0.665 ft		0.950 ft	
Froude Number:	1.24		0.64	
Roughness Coefficient:	0.0386		0.0794	

Subwatershed Hydrology Detail:

Stru #	SWS #	SWS Area (ac)	Time of Conc (hrs)	Musk K (hrs)	Musk X	Curve Number	UHS	Peak Discharge (cfs)	Runoff Volume (ac-ft)
#1	1	15.240	0.091	0.000	0.000	81.000	F	49.52	2.685
	2	1.000	0.020	0.095	0.378	74.000	M	2.64	0.132
	Σ	**16.240**						**51.87**	**2.817**

Subwatershed Time of Concentration Details:

Stru #	SWS #	Land Flow Condition	Slope (%)	Vert. Dist. (ft)	Horiz. Dist. (ft)	Velocity (fps)	Time (hrs)
#1	1	5. Nearly bare and untilled, and alluvial valley fans	2.00	2.00	100.00	1.410	0.019
		8. Large gullies, diversions, and low flowing streams	4.13	66.00	1,599.99	6.090	0.072
#1	**1**	**Time of Concentration:**					**0.091**
#1	2	3. Short grass pasture	3.00	3.00	100.00	1.380	0.020
#1	**2**	**Time of Concentration:**					**0.020**

Subwatershed Muskingum Routing Details:

Stru #	SWS #	Land Flow Condition	Slope (%)	Vert. Dist. (ft)	Horiz. Dist. (ft)	Velocity (fps)	Time (hrs)
#1	2	8. Large gullies, diversions, and low flowing streams	3.06	55.00	1,800.00	5.240	0.095
#1	**2**	**Muskingum K:**					**0.095**

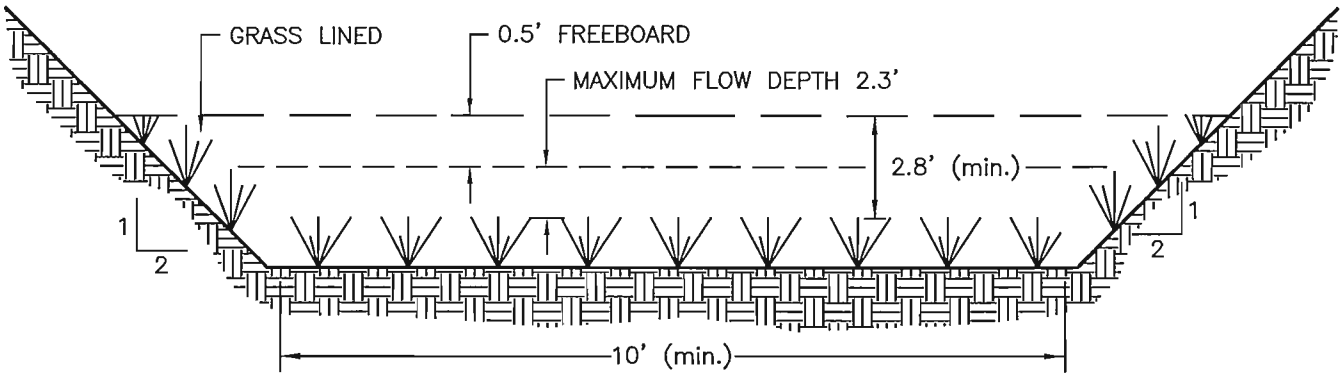

GRASS LINING TO CONSIST OF GRASS MIXTURE.

CUT SECTION

7+00 to 10+77

PERC ENGINEERING CO., INC.
1606 Highway 78 West Jasper, Alabama 35501
P.O. Box 1712 Jasper, Alabama 35502
(205) 384-5553 Office (205) 384-9191 Fax

RIDGEHOLM ENERGY PARTNERS, LLC
JOHN POE MINE
P-3981
DIVERSION A-A'
(7+00 TO 10+77)

DRAWN BY: L.G.S. DWG. NAME: RHJPDIVAA'	DATE: 12/07/2015
APPROVED BY: L.G.S.	SCALE: NONE

V:\Mining\Ridgeholm Energy Partners\John Poe Mine P-3981\Diversion A-A'\RHJPDIVAA'.dwg 12/07/15 12:01

Copyright 1998 -2010 Pamela L Schwab

Ridgeholm Energy Partners LLC

John Poe Mine

P-3981

Diversion A-A'

7+00 to 10+77

4.0 Inch, 10 Year-6 Hour

NRCS Type II

LGS

PERC ENGINEERING CO., INC.
P. O. BOX 1712
1606 HIGHWAY 78 WEST
JASPER ALABAMA 35502

Phone: 205-384-5553
Email: LSTEPHENS@PERCENGINEERING.COM

General Information

Storm Information:

Storm Type:	NRCS Type II
Design Storm:	10 yr - 6 hr
Rainfall Depth:	4.000 inches

Structure Networking:

Type	Stru #	(flows into)	Stru #	Musk. K (hrs)	Musk. X	Description
Channel	#1	==>	End	0.000	0.000	Diversion A-A' 7+00 to 10+77

#1
Chan'l

Structure Summary:

	Immediate Contributing Area (ac)	Total Contributing Area (ac)	Peak Discharge (cfs)	Total Runoff Volume (ac-ft)
#1	19.800	19.800	63.44	3.44

Structure Detail:

Structure #1 (Vegetated Channel)

Diversion A-A' 7+00 to 10+77

Trapezoidal Vegetated Channel Inputs:

Material: Grass mixture

Bottom Width (ft)	Left Sideslope Ratio	Right Sideslope Ratio	Slope (%)	Retardance Classes	Freeboard Depth (ft)	Freeboard % of Depth	Freeboard Mult. x (VxD)	Limiting Velocity (fps)
10.00	2.0:1	2.0:1	0.6	D, B	0.50			5.0

Vegetated Channel Results:

	Stability Class D w/o Freeboard	Stability Class D w/ Freeboard	Capacity Class B w/o Freeboard	Capacity Class B w/ Freeboard
Design Discharge:	63.44 cfs		63.44 cfs	
Depth:	1.50 ft	2.00 ft	2.27 ft	2.77 ft
Top Width:	15.98 ft	17.98 ft	19.08 ft	21.08 ft
Velocity:	3.26 fps		1.92 fps	
X-Section Area:	19.44 sq ft		33.01 sq ft	
Hydraulic Radius:	1.165 ft		1.638 ft	
Froude Number:	0.52		0.26	
Roughness Coefficient:	0.0388		0.0827	

Subwatershed Hydrology Detail:

Stru #	SWS #	SWS Area (ac)	Time of Conc (hrs)	Musk K (hrs)	Musk X	Curve Number	UHS	Peak Discharge (cfs)	Runoff Volume (ac-ft)
#1	1	18.800	0.102	0.000	0.000	81.000	F	61.09	3.312
	2	1.000	0.020	0.095	0.378	74.000	M	2.64	0.132
	Σ	**19.800**						**63.44**	**3.444**

Subwatershed Time of Concentration Details:

Stru #	SWS #	Land Flow Condition	Slope (%)	Vert. Dist. (ft)	Horiz. Dist. (ft)	Velocity (fps)	Time (hrs)
#1	1	5. Nearly bare and untilled, and alluvial valley fans	2.00	2.00	100.00	1.410	0.019
		8. Large gullies, diversions, and low flowing streams	3.53	60.00	1,700.00	5.630	0.083
#1	**1**	**Time of Concentration:**					**0.102**
#1	2	3. Short grass pasture	3.00	3.00	100.00	1.380	0.020
#1	**2**	**Time of Concentration:**					**0.020**

Subwatershed Muskingum Routing Details:

Stru #	SWS #	Land Flow Condition	Slope (%)	Vert. Dist. (ft)	Horiz. Dist. (ft)	Velocity (fps)	Time (hrs)
#1	2	8. Large gullies, diversions, and low flowing streams	3.06	55.00	1,800.00	5.240	0.095
#1	**2**	**Muskingum K:**					**0.095**

Applicant: Ridgeholm Energy Partners, LLC
Mine Name: John Poe Mine
Permit Number: P-3981

4. Disposal of excess spoil. (780.35, 816.71)

Are excess spoil fills proposed?

(XX) Yes ( ) No

If yes, complete the following: See Attachment III-B-4

(a) Show on a map the location of all proposed fills and provide cross-sections of the proposed site and the design of the disposal structures.

(b) Include the results of the geotechnical investigation showing:

(1) A description of physical characteristics of bedrock and geological conditions in the disposal area; and

(2) A determination of possible adverse affects from subsidence due to past, present or future underground mining.

(3) Location of springs, seeps, or other ground water observed or anticipated in the disposal area.

(4) A technical description of the rock to be used in construction of rock chimney cores or rock drainage blankets, if applicable.

(5) Results of stability analyses including strength parameters, pore pressures and long term seepage conditions; and

(6) Engineering design assumptions, calculations, and any alternatives considered.

(c) Describe the construction, operation, maintenance and removal (if applicable) of the structure.

(d) Include a surface water drainage and control plan for the fill.

(e) Are rock-toe buttresses or keyway cuts to be used?

( ) Yes (XX) No

If yes, describe or show:

(1) The number, location and depth of test borings or test pits used in describing subsurface conditions; and

(2) Engineering specifications used in the design

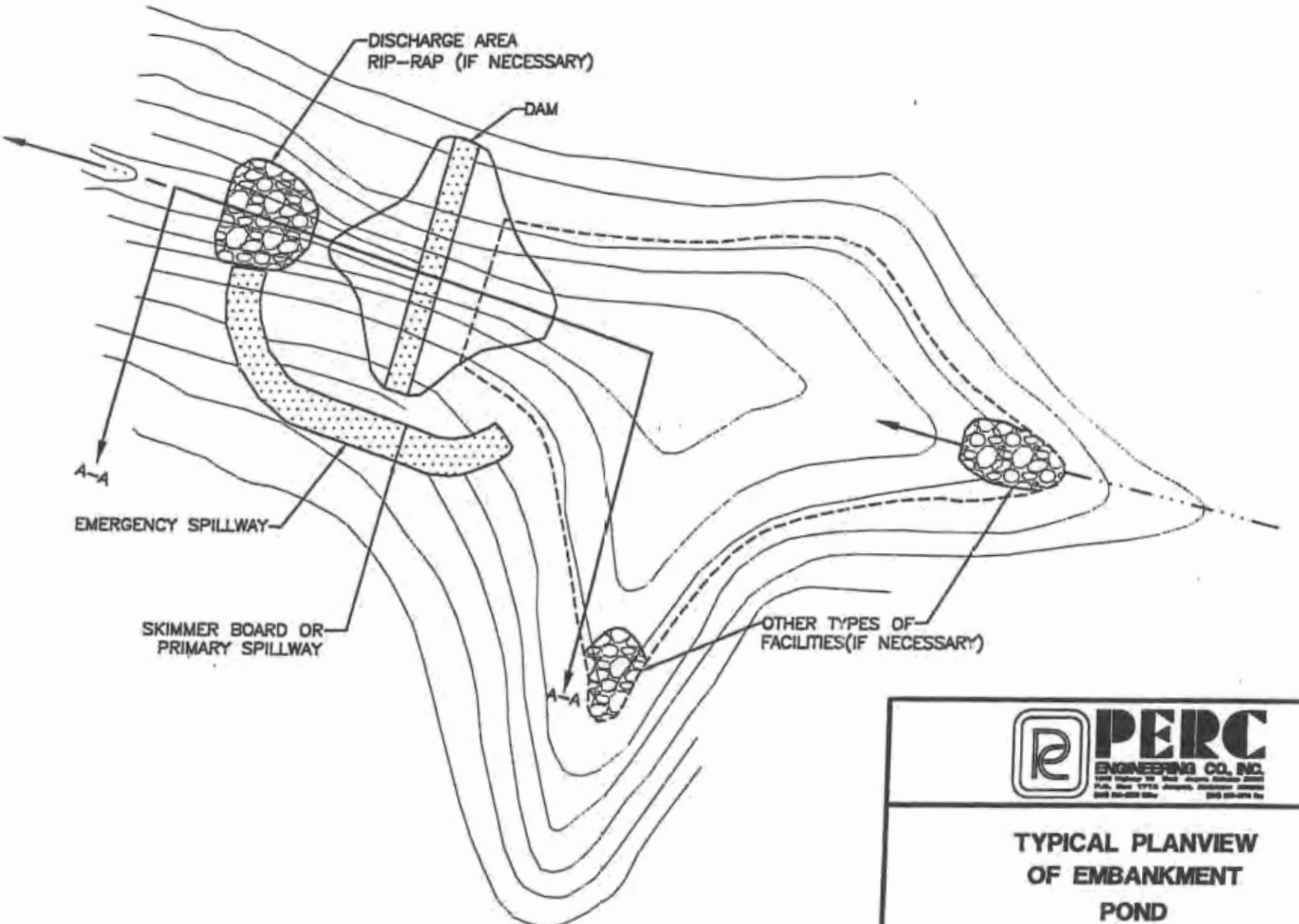

PLANVIEW OF EMBANKMENT POND

PERC ENGINEERING CO. INC.

TYPICAL PLANVIEW OF EMBANKMENT POND

DRAWN BY: P.T.O. DWG. NAME: TYPICALS	DATE: 8-10-05
APPROVED BY: W.K.M.	SCALE: NONE

ATTACHMENT III-B-2-A

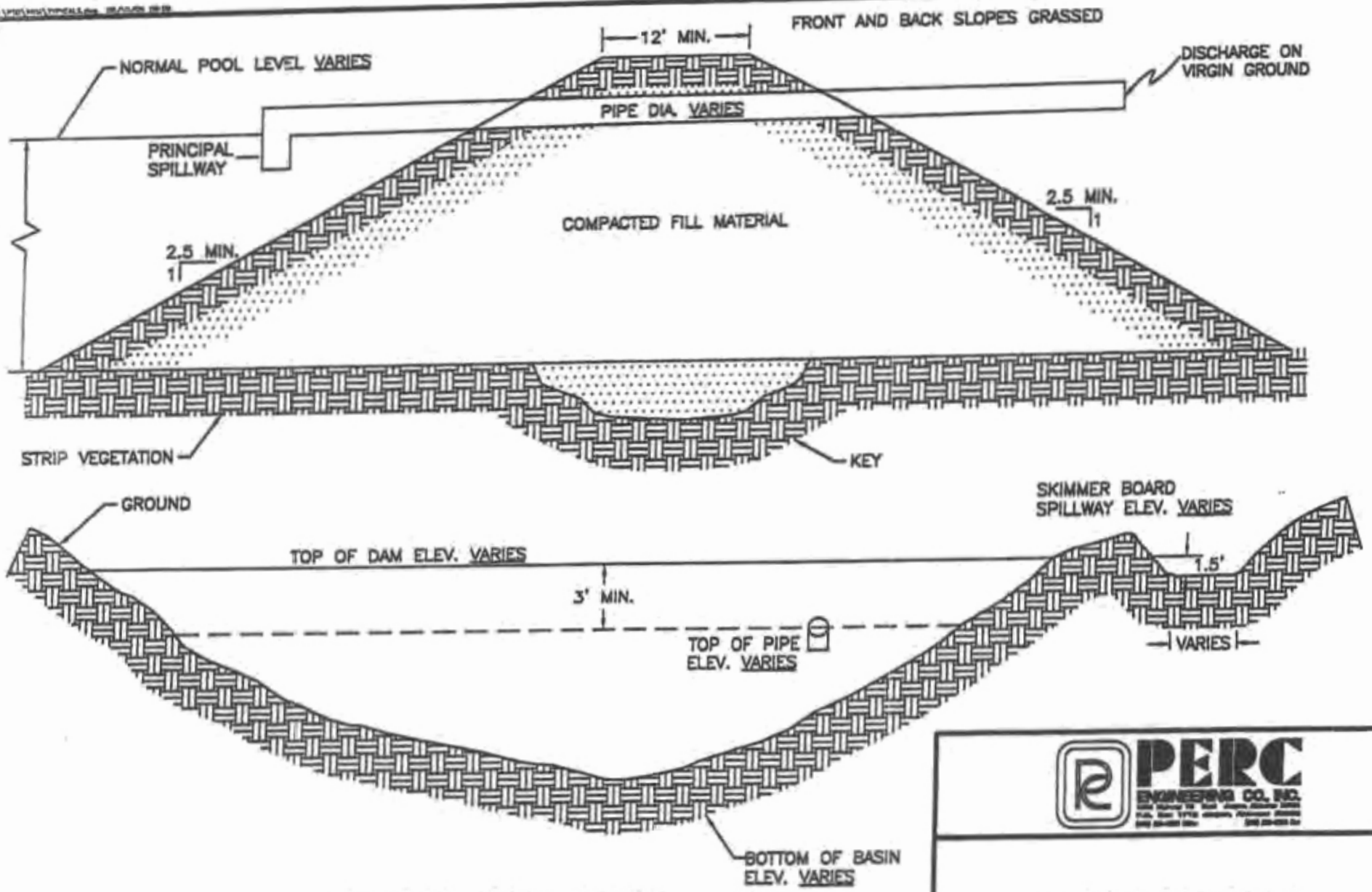

TYPICAL DAM DETAIL
NO SCALE

PERC ENGINEERING CO. INC.

TYPICAL DAM DETAIL

DRAWN BY: P.T.O. DWG. NAME: TYPICALS	DATE: 8-10-05
APPROVED BY: W.K.M.	SCALE: NONE

ATTACHMENT III-B-2-A

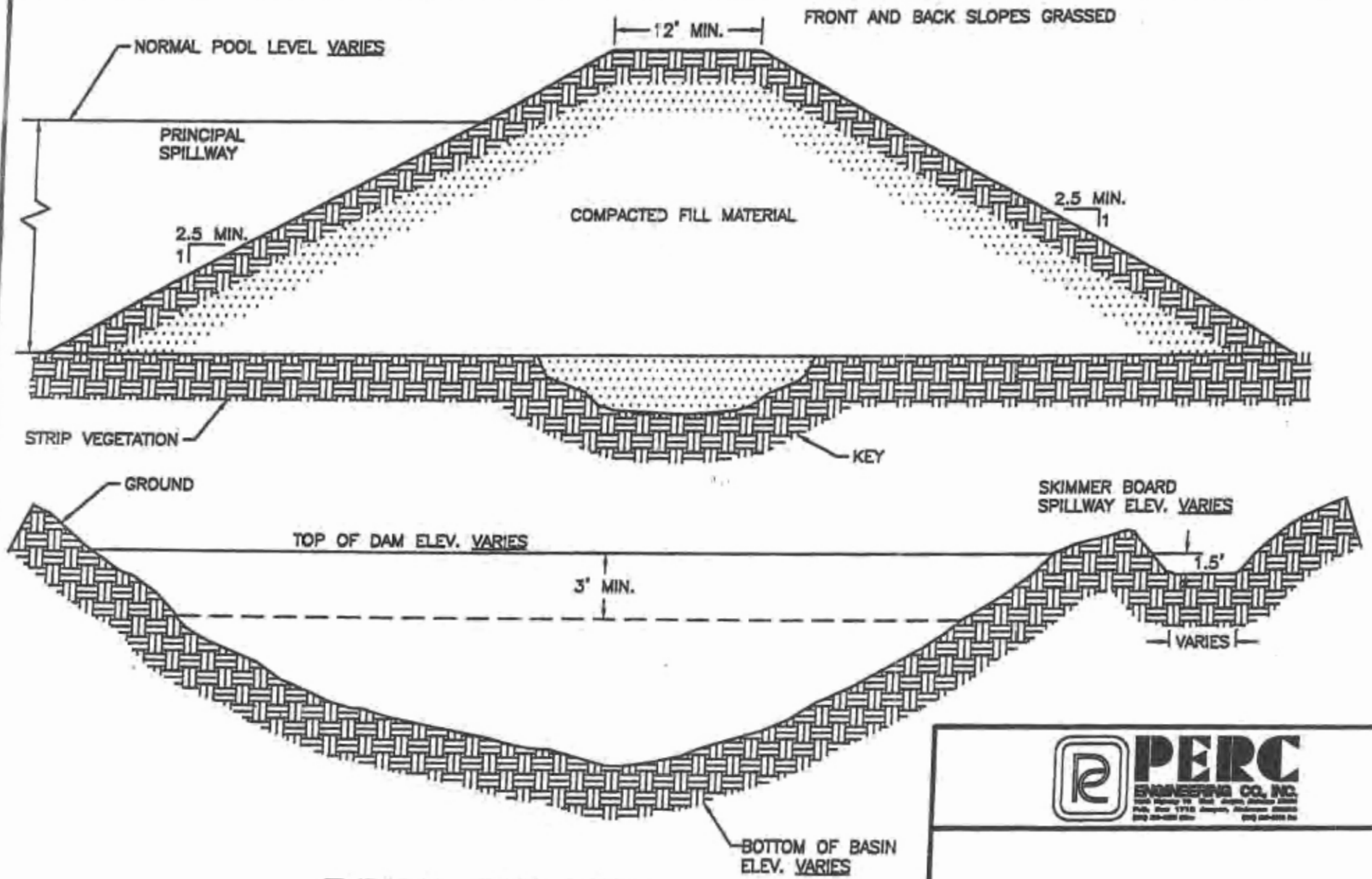

TYPICAL DAM DETAIL
NO SCALE

PERC ENGINEERING CO., INC.

TYPICAL DAM DETAIL

DRAWN BY: P.T.O. DWG. NAME: TYPICALS	DATE: 8-10-05
APPROVED BY: W.K.M.	SCALE: NONE

ATTACHMENT III-B-2-A

Applicant: Ridgeholm Energy Partners, LLC
Mine Name: John Poe Mine
Permit Number: P-3981

Attachment III-B-4

SPECIFICATIONS FOR TEMPORARY DISPOSAL OF SPOIL

Spoil material taken from the construction of Basin 004P Phase I and Phase II in John Poe Mine Increment No. 2 initial pits and any subsequent pits that are necessary to ensure the safe and efficient operation for Increment No. 2 will be stored within Temporary Spoil Disposal Area No.1 The disposal area plans shall be designed and certified by a qualified registered professional engineer and subsequently submitted to the Regulatory Authority for approval.

Due to the spoil material being placed within the fills being large cobble sized stones and the disposal areas being free of springs, groundwater seeps, and natural drainage courses, no underdrain systems are required.

All topsoil, vegetative and organic material will be removed from the disposal area prior to the transportation of any fill material. The topsoil will be stored onsite in stockpiles, to be redistributed over the disposal area prior to revegetation.

Spoil material taken from the initial cuts will be transported to the disposal area via mobile equipment in a controlled and safe manner. The spoil material will be spread in horizontal lifts not to exceed four (4) feet thick and compacted to 90% of the standard proctor as outlined in the ASTM, as to ensure stability of the area. No combustible material will be allowed to be stored in the disposal area. With the acid-base count of the material at this mine site, no acid or toxic forming material is expected. However, should any such material be encountered, it will be placed as near the center of the fill as possible and encapsulated with three feet of compacted clay.

Analysis of the foundation and fill materials will be performed by a qualified laboratory and the results will be utilized in the stability analysis in the detailed Temporary spoil disposal plans. The slopes of the fill area will be designed to have a 1.5 minimum static safety factor.

The fill will be inspected by a qualified registered professional engineer or other qualified professional specialist under the direct supervision of the professional engineer. Inspections will be made at least quarterly and during the times of removal of topsoil, vegetative, and organic materials, installation of diversion ditches, placement and compaction of spoil material, and revegetation of the areas. Certified inspection reports will be filed with the Regulatory Authority on a quarterly basis until the final configuration of the fill is reached stating that proper construction and maintenance are occurring in accordance with approved design plans. Inspection reports will be retained at the facility office.

The final configuration of the disposal area will be graded in such a manner as to be consistent with the surrounding area and revegetated in such a manner as to be consistent with the landuse of the surrounding area.

Slope protection will be achieved through the use of seed and mulch. The disposal area will be revegetated as entailed in the reclamation plan.
Routine maintenance of the disposal area will consist of repair and stabilization of any rills and gullies which may develop upon the final configuration, repairs to erosion protection structures as required, repairs to diversion structures as necessary and the maintenance of vegetation as necessary to ensure the establishment of a permanent diverse vegetative cover.

5. Transportation Facilities (780.33, 780.37)

Applicant: Ridgeholm Energy Partners, LLC
Mine Name: John Poe Mine
Permit Number: P-3981

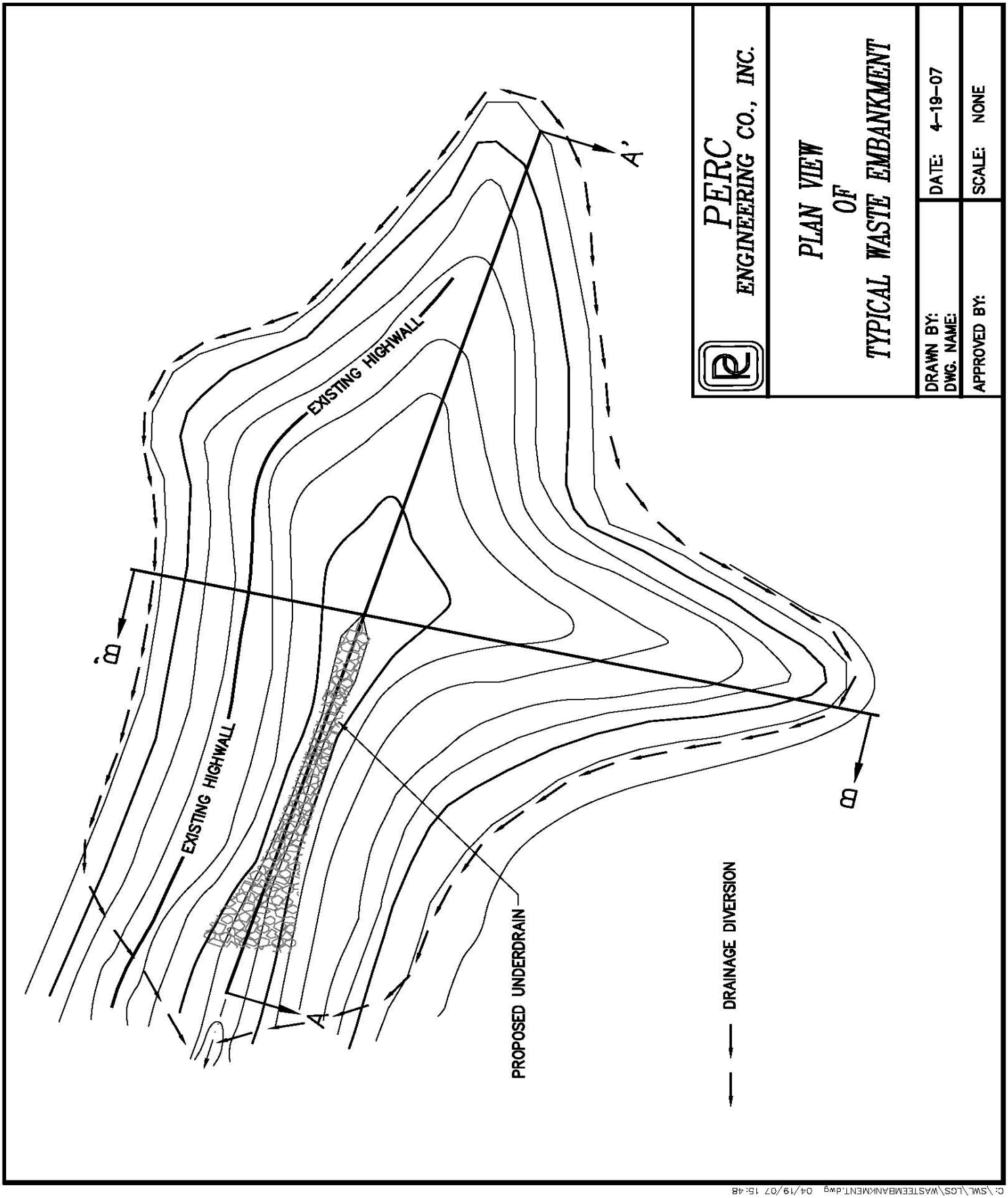

C:\SWL\LCS\WASTEEMBANKMENT.dwg 04/19/07 15:48

Applicant: Ridgeholm Energy Partners, LLC
Mine Name: John Poe Mine
Permit Number: P-3981

(a) Describe the measures to be taken to ensure the interest of the public and landowners affected are protected if disturbance within 100 feet of the right-of-way or relocation of a public road is proposed.

1) Safety berms will be constructed adjacent to roadways to be disturbed to contain traffic.
2) Proper signs, informing the traveling public of the disturbance, will be posted along the road right-of-ways 500 feet from the beginning of the disturbance.
3) All safety requirements of the appropriate public health and safety, will be followed.

(b) Describe any unique design, feature, or structure which is necessary for the road to meet the performance standards of Subchapter K using any necessary maps, plans, or cross-sections.

See Attachments III-B-5 and III-B-5(b) for specifications and detailed designs of the roads at this facility.

(c) Describe, in detail, the measures to be taken during construction, maintenance and use of the transportation facilities to prevent damage to fish and wildlife and their habitat; public and private property; and erosion, siltation, and pollution of water. Roads will be constructed with the required ditching for proper drainage. Roads will be maintained with a dozer and motor grader patrol as required. Water will be used to reduce erosion and dust emissions. Roads will be located on ridge tops where possible or on the most stable slopes to minimize erosion. Vegetation will not be cleared except as necessary for roadway and ditch construction. After construction of the roads is complete, vegetation will be established on cut and fill slopes that exist along the all roads. To the extent possible, roads will be located above the sediment basins to be constructed for the mining operation in an effort to control or prevent additional contributions of suspended solids to stream flow or runoff outside the permit area and to comply with State and Federal water quality standards applicable to receiving waters and avoid the alteration of the normal flow of water in streambeds or drainage channels while preventing or controlling damage to public or private property. Where it is not possible or is impractical to locate roads in this manner, sediment control devices such as silt fencing, hay bale check dams and rock filter check dams will be used as necessary to maintain water quality. Roads not required for fire and sediment basin access will be reclaimed. See Attachment III-B-5, Attachment III-B-5(b), and Specifications for the construction, maintenance, and reclamation of primary roads.

SPECIFICATIONS FOR THE CONSTRUCTION, MAINTENANCE

Applicant: Ridgeholm Energy Partners, LLC
Mine Name: John Poe Mine
Permit Number: P-3981

AND RECLAMATION OF ANCILLARY ROADS

1. To the extent possible, roads will be located on ridges or on the most stable available slopes to prevent or minimize erosion, downstream sedimentation and flooding in an effort to prevent adverse effects to fish, wildlife and related environmental values.

2. To the extent possible, roads will be located above the sediment basins to be constructed for the mining operation in an effort to control or prevent additional contributions of suspended solids to stream flow or runoff outside the permit area and to comply with State and Federal water quality standards applicable to receiving waters and avoid the alteration of the normal flow of water in streambeds or drainage channels while preventing or controlling damage to public or private property. Where it is not possible or is impractical to locate roads in this manner, sediment control devices such as silt fencing, hay bale check dams and rock filter check dams will be used as necessary to maintain water quality.

3. Prior to construction, the roadway will be cleared, grubbed and will have the topsoil removed. The clearing limits will be kept to the minimum necessary to accommodate the roadbed and associated ditch construction.

4. Roads will be constructed of suitable subgrade material compacted to ninety-five percent of the standard proctor density and will have a minimum width of ten feet and a maximum width necessary to accommodate the largest equipment traveling the road.

5. Roadbeds will be cut to consolidated non-erodible material or will be surfaced with durable non-toxic, non-acid forming substances. It is anticipated that durable sandstone overburden on site will be utilized as surfacing material. If there should not be adequate sandstone on site, then a durable sandstone material, chert, crushed limestone, crushed concrete, crushed asphalt, red rock, iron ore refuse, gravel, or other durable non-toxic, non-acid forming material approved by the Regulatory Authority will be hauled in from off site and placed on the roadbed to a depth of two inches.

6. No sustained grades will exceed ten percent unless deemed necessary, in which case appropriate sediment control facilities will be constructed. If grades in excess of fifteen percent are required, cross drains, ditch relief drains and road drainage ways will be located at a minimum distance of three-hundred feet.

7. Roads will be constructed so as to have adequate drainage utilizing ditches, cross drains and ditch relief drains. Roads will not be located in the channel of an intermittent or perennial stream unless specifically approved by the Alabama Surface Mining

Commission. Additionally, no relocation and/or alteration of an intermittent or perennial stream will be done unless specifically approved by the Alabama Surface Mining Commission. In the event that it becomes evident that any drainage structures including culverts, bridges and/or low water crossings will be required in order to cross an intermittent or perennial stream, the structure will be designed in accordance with Alabama Surface Mining Commission requirements and prudent engineering practice and the approval of the design(s) will be acquired prior to the commencement of construction. Hay bale check dams and silt fences will be used at strategic locations when necessary to control sediment runoff. Immediately upon completion of construction, the side slopes of the road embankments and/or cuts will be fertilized, seeded with annual and perennial grasses and mulch will be added to aid in the prevention of erosion and to enhance seed germination. The seed mix will consist of, but is not limited to, some combination of the following species: Bermuda grass, fescue, lespedeza, rye grass, brown top millet, clover and vetch. The particular species to be planted will vary with the planting season at the time of seed application.

8. Routine maintenance will be required to assure that the road continually meets performance standards and will consist of periodic grading, resurfacing, dust suppression and maintenance of sediment control facilities. Dust suppression will consist of the application of water, chemical binders and/or other dust suppressants. No oil will be utilized in this process. Spot seeding, fertilizing and mulching will be performed as necessary to improve vegetative cover on roadway slopes. A road damaged by a catastrophic event shall be repaired as soon as practicable after the damage has occurred.

9. Roads not to be retained as part of the post mine land use shall be reclaimed in accordance with the approved reclamation plan for this permit as soon as practicable after they are no longer needed as part of the mining and reclamation operation, using the following procedures:

   a. The road will be closed to traffic.
   b. All bridges, culverts and other drainage structures not approved as part of the post mine land use will be removed.
   c. All road surfacing materials that are not compatible with the post mine land use or revegetation requirements will be properly disposed of on-site or removed from the site for re-use.
   d. Roadway cut and fill slopes shall be regraded and reshaped to be compatible with the post mine land use and to compliment the natural drainage pattern of the surrounding terrain.
   e. The natural drainage patterns shall be protected from surface runoff and erosion utilizing the installation of dikes and/or

cross drains as necessary.

f. The roadbed shall be ripped or scarified as necessary, the topsoil or substitute or approved growing medium shall be replaced and revegetated in accordance with the approved reclamation plan for this permit.

10. The following drawings illustrate typical roadbed configurations for ancillary roads.

Ridge
John
P-39

TYPICAL HAUL ROAD
FILL SECTION

NO SCALE

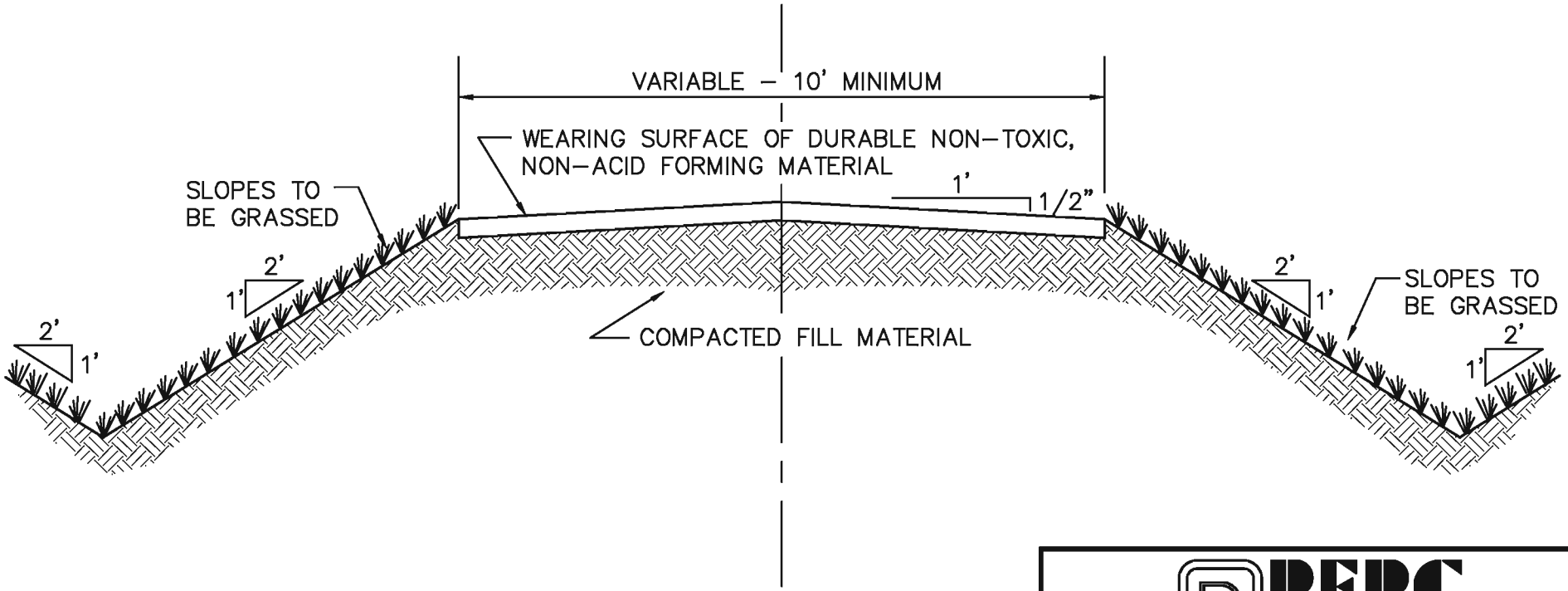

PERC ENGINEERING CO., INC.

TYPICAL FILL SECTION
ANCILLARY HAUL ROAD

DRAWN BY: K.D.P. DWG. NAME: TYPHAULA	DATE: 2–3–97
APPROVED BY: S.R.I.	SCALE: NONE

ATTACHMENT III.–B.–5.

K:\S\TYPHAULA 02/03/97 16:56

Ridge
John
P-398

TYPICAL HAUL ROAD
CUT SECTION

NO SCALE

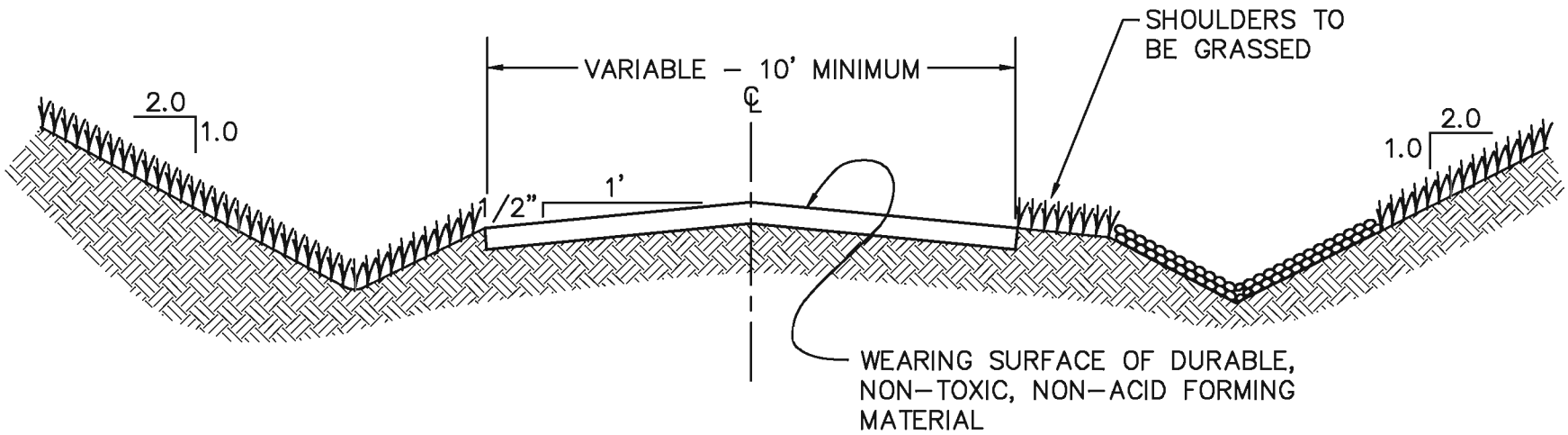

PERC ENGINEERING CO., INC.

TYPICAL CUT SECTION
ANCILLARY HAUL ROAD

DRAWN BY: K.D.P. DWG. NAME: TYPHAULB	DATE: 2–3–97
APPROVED BY: S.R.I.	SCALE: NONE

ATTACHMENT III.–B.–5.

K:\S\TYPHAULB 02/04/97 08:08

Ridge
John
P-39

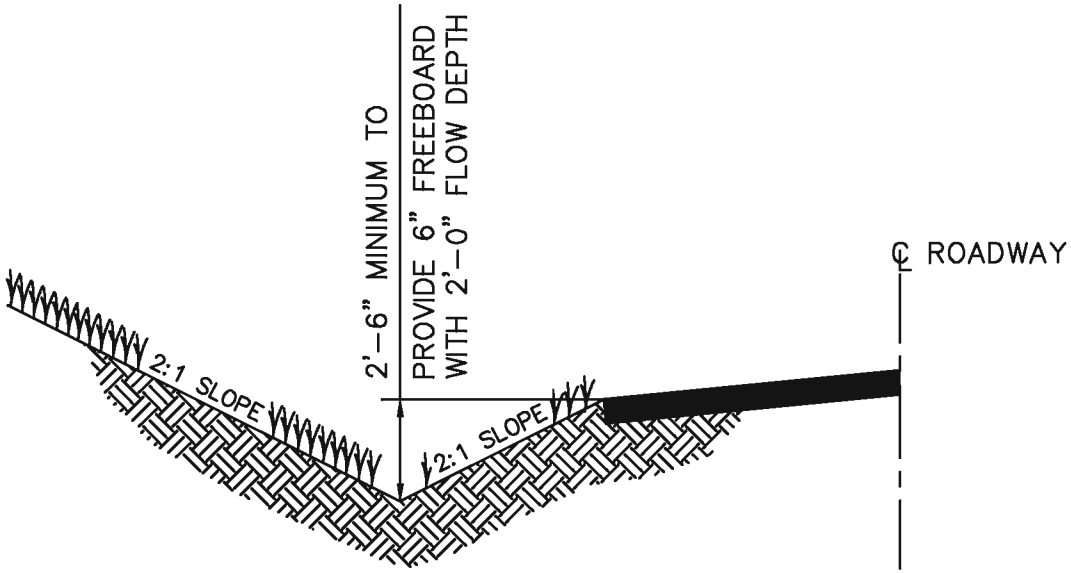

MINIMUM DITCH GRADIENT = 1%

MAXIMUM DITCH GRADIENT = 5%

DITCH CHANNEL TO BE VEGETATED WITH A MIXTURE OF BERMUDA GRASS, FESCUE, AND LESPEDEZA TO CONFORM TO CLASS "D" RETARDANT CLASS.

PERC ENGINEERING CO., INC.

TYPICAL ANCILLARY ROADWAY DITCH CROSS SECTION

DRAWN BY: K.D.P. DWG. NAME: ANCIROAD	DATE: 2-4-97
APPROVED BY: R.E.P.	SCALE: NONE

K:\S\ANCIROAD 02/04/97 08:01

Ridg
John
P-39

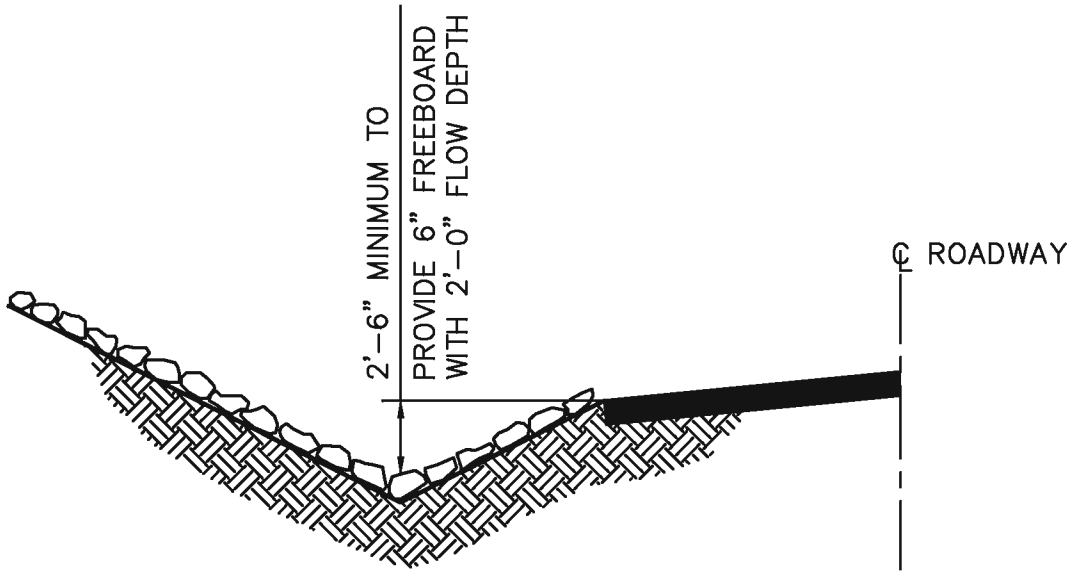

DITCH GRADIENT 5% TO 10%

DITCH CHANNEL TO BE LINED WITH NON-ERODIBLE NON-TOXIC, NON-ACID FORMING SANDSTONE OR LIMESTONE RIP-RAP. THE RIP-RAP WILL BE "CLASS 1" RIP-RAP AND HAVE A MINIMUM THICKNESS OF 12".

PERC ENGINEERING CO., INC.

TYPICAL ANCILLARY ROADWAY DITCH CROSS SECTION

DRAWN BY: K.D.P. DWG. NAME: PRIMRD1	DATE: 2-4-97
APPROVED BY: R.E.P.	SCALE: NONE

K:\S\PRIMRD1 02/04/97 08:31

Ridge
John
P-398

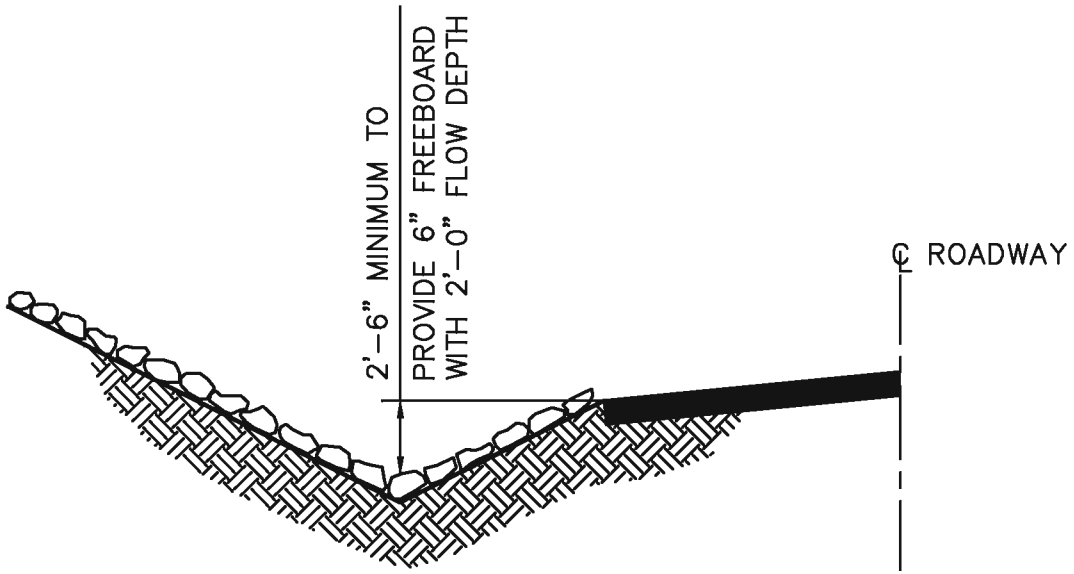

DITCH GRADIENT 11% TO 17%

DITCH CHANNEL TO BE LINED WITH NON-ERODIBLE NON-TOXIC, NON-ACID FORMING SANDSTONE OR LIMESTONE RIP-RAP. THE RIP-RAP WILL BE "CLASS 2" RIP-RAP AND HAVE A MINIMUM THICKNESS OF 16".

PERC ENGINEERING CO., INC.

TYPICAL ANCILLARY ROADWAY DITCH CROSS SECTION

DRAWN BY: K.D.P. DWG. NAME: PRIMRD2	DATE: 2-4-97
APPROVED BY: R.E.P.	SCALE: NONE

K:\S\PRIMRD2 02/04/97 08:33

Applicant: Ridgeholm Energy Partners, LLC
Mine Name: John Poe Mine
Permit Number: P-3981

SPECIFICATIONS FOR THE CONSTRUCTION, MAINTENANCE AND RECLAMATION OF PRIMARY ROADS

1. Primary roads shall be designed by or under the direction of a registered professional engineer in accordance with the Alabama Surface Mining Commission rules and regulations and prudent engineering practice.

2. Each roadway embankment will be designed and constructed so as to have a minimum static safety factor of 1.3.

3. To the extent possible, roads will be located on ridges or on the most stable available slopes to prevent or minimize erosion, downstream sedimentation and flooding in an effort to prevent adverse effects to fish, wildlife and related environmental values.

4. To the extent possible, roads will be located above the sediment basins to be constructed for the mining operation in an effort to control or prevent additional contributions of suspended solids to stream flow or runoff outside the permit area and to comply with State and Federal water quality standards applicable to receiving waters and avoid the alteration of the normal flow of water in streambeds or drainage channels while preventing or controlling damage to public or private property. Where it is not possible or is impractical to locate roads in this manner, sediment control devices such as silt fencing, hay bale check dams and rock filter check dams will be used as necessary to maintain water quality. No fording of intermittent or perennial streams will be conducted unless specifically approved by the Alabama Surface Mining Commission as temporary routes to be used during road construction.

5. Prior to construction, the roadway will be cleared, grubbed and will have the topsoil removed. The clearing limits will be kept to the minimum necessary to accommodate the roadbed and associated ditch construction.

6. Roads will be constructed of suitable compacted subgrade material. The material will be free of sod, roots, stones over 12 inches in diameter, and other objectionable materials. The material will be placed and spread over the entire fill area, starting at the lowest point in layers not to exceed 12 inches in thickness. The material will be compacted to 95 percent of the density, based on standard proctor as outlined in ASTM.

G) Primary roads will have a minimum width of eighteen feet and a maximum width necessary to accommodate the largest equipment traveling the road.

H) Roadbeds will be cut to consolidated non-erodible material or will be surfaced with durable non-toxic, non-acid forming substances. The wearing surface will consist of durable sandstone, chert, crushed limestone, crushed concrete, crushed asphalt, red rock, iron ore refuse, gravel, or other durable non-toxic, non-acid forming material approved by the Regulatory Authority. The wearing surface will be placed on the roadbed to a depth of four inches.

9. No sustained grades will exceed ten percent unless deemed necessary, in which case appropriate sediment control facilities will be constructed. If grades in excess of fifteen percent are required, cross drains, ditch relief drains and road drainage ways will be located at a minimum distance of three-hundred feet.

10. Roads will be constructed so as to have adequate drainage utilizing ditches, culverts, cross drains and ditch relief drains designed to safely pass the peak runoff from a ten year, six hour precipitation event. Drainage pipes and culverts shall be installed as designed and will be maintained in a free and operating condition to prevent and control erosion at inlets and outlets. Culverts have been designed to support the load of the heaviest equipment to travel the road and are based on the Handbook of Steel Drainage and Highway Construction Products by the American Iron and Steel Institute and the equipment specifications. Drainage ditches will be constructed and maintained in accordance with the approved design to prevent uncontrolled drainage over the road surface and embankment. Roads will not be located in the channel of an intermittent or perennial stream unless specifically approved by the Alabama Surface Mining Commission. Additionally, no relocation and/or alteration of an intermittent or perennial stream will be done unless specifically approved by the Alabama Surface Mining Commission. In the event that it becomes evident that any drainage structures including culverts, bridges and/or low water crossings will be required in order to cross an intermittent or perennial stream, the structure will be designed and constructed in accordance with Alabama Surface Mining Commission requirements and prudent engineering practice and the approval of the design(s) will be acquired prior to the commencement of construction. Hay bale check dams and silt fences will be used at strategic locations when necessary to control sediment runoff. Immediately upon completion of construction, the side slopes of the road embankments and/or cuts will be fertilized, seeded with annual and perennial grasses and mulch will be added to aid in the prevention of erosion and to enhance seed germination. The seed mix will consist of, but is not limited to, some combination of the following species: Bermuda grass, fescue, lespedeza, rye grass, brown top millet, clover and vetch. The particular species to be planted will vary with the planting season at the time of seed application. Upon completion of construction of each phase of the roadway the construction will

be certified to the Alabama Surface Mining Commission as having been done in accordance with the approved plans for the roadway and associated facilities.

11. Routine maintenance will be required to assure that the road continually meets performance standards and will consist of periodic grading, resurfacing, dust suppression and maintenance of sediment control facilities. Dust suppression will consist of the application of water, chemical binders and/or other dust suppressants. No oil will be utilized in this process. Spot seeding, fertilizing and mulching will be performed as necessary to improve vegetative cover on roadway slopes. A road damaged by a catastrophic event shall be repaired as soon as practicable after the damage has occurred.

12. Roads not to be retained as part of the post mine land use shall be reclaimed in accordance with the approved reclamation plan for this permit as soon as practicable after they are no longer needed as part of the mining and reclamation operation, using the following procedures:

    a. The road will be closed to traffic.
    b. All bridges, culverts and other drainage structures not approved as part of the post mine land use will be removed.
    c. All road surfacing materials that are not compatible with the post mine land use or revegetation requirements will be properly disposed of on-site or removed from the site for re-use.
    d. Roadway cut and fill slopes shall be regraded and reshaped to be compatible with the post mine land use and to compliment the natural drainage pattern of the surrounding terrain.
    e. The natural drainage patterns shall be protected from surface runoff and erosion utilizing the installation of dikes and/or cross drains as necessary.
    f. The roadbed shall be ripped or scarified as necessary, the topsoil or substitute or approved growing medium shall be replaced and revegetated in accordance with the approved reclamation plan for this permit.

13. The drawings and data contained in the specific design plans illustrate typical roadbed configurations for primary roads as well as site specific design of drainage structures, stability analysis and ditch sections.

TYPICAL HAUL ROAD
CUT SECTION

NO SCALE

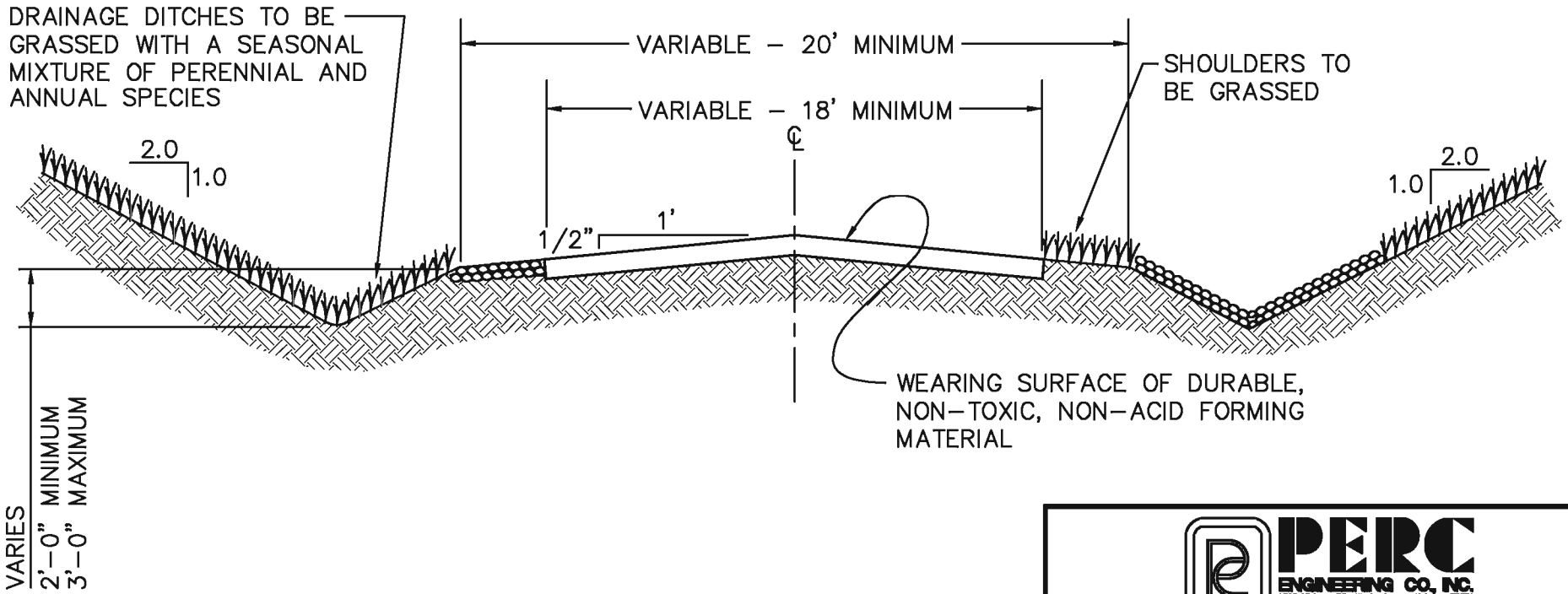

PERC ENGINEERING CO., INC.

TYPICAL CUT SECTION
PRIMARY HAUL ROAD

DRAWN BY: K.D.P. DWG. NAME: TYPHAULC	DATE: 2–3–97
APPROVED BY: S.R.I.	SCALE: NONE

ATTACHMENT III.–B.–5.

K:\S\TYPHAULC 02/03/97 15:56

TYPICAL HAUL ROAD
FILL SECTION

NO SCALE

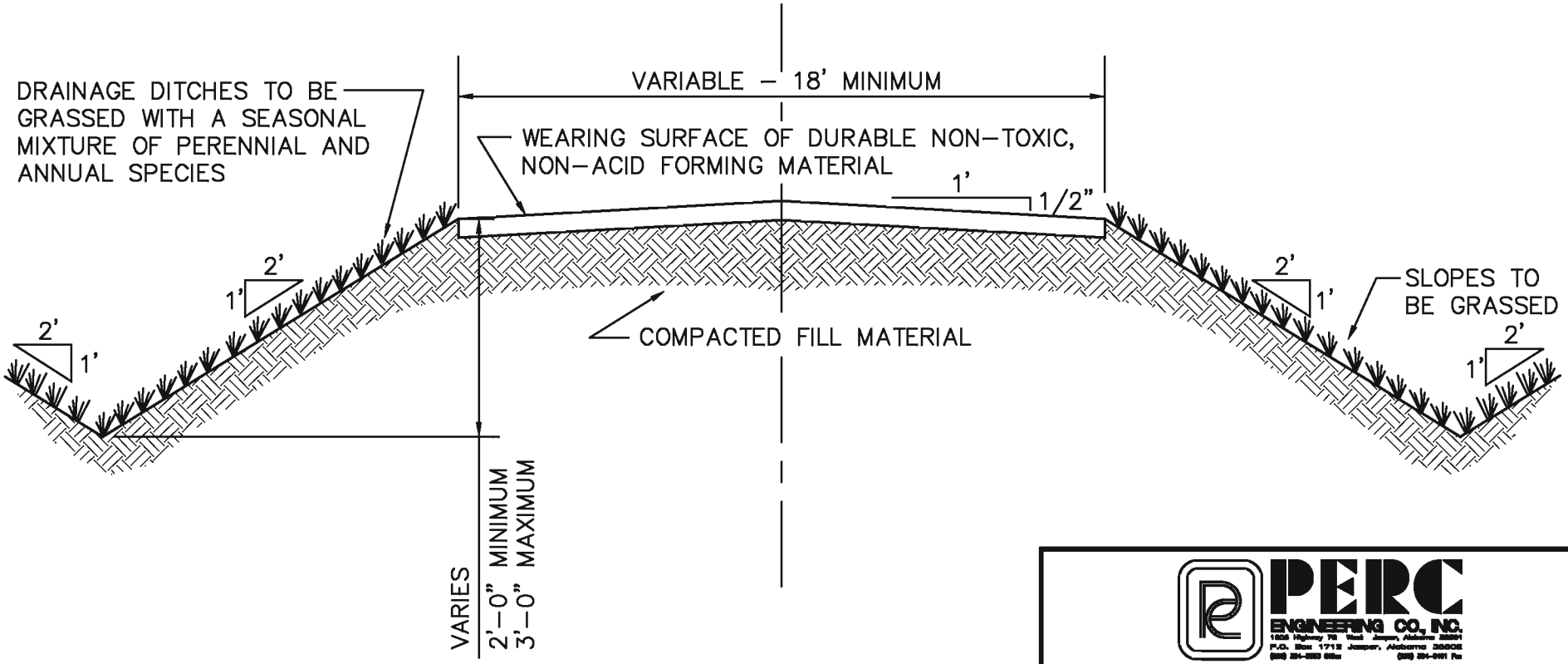

PERC ENGINEERING CO., INC.

TYPICAL FILL SECTION
PRIMARY HAUL ROAD

DRAWN BY: K.D.P. DWG. NAME: TYPHAULF	DATE: 2–3–97
APPROVED BY: S.R.I.	SCALE: NONE

ATTACHMENT III.–B.–5.

K:\S\TYPHAULF 02/03/97 16:01

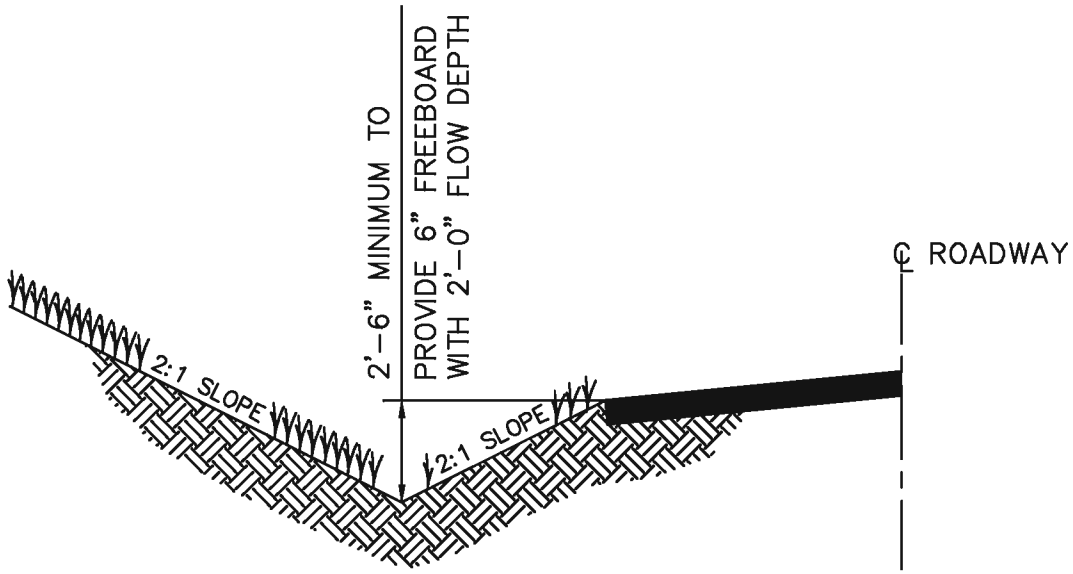

MINIMUM DITCH GRADIENT = 1%

MAXIMUM DITCH GRADIENT = 5%

DITCH CHANNEL TO BE VEGETATED WITH A MIXTURE OF BERMUDA GRASS, FESCUE, AND LESPEDEZA TO CONFORM TO CLASS "D" RETARDANT CLASS.

PERC ENGINEERING CO., INC.
1625 Highway 78 West Jasper, Alabama 35501
P.O. Box 1718 Jasper, Alabama 35502
(205) 384-4888 office (205) 384-5481 fax

TYPICAL PRIMARY ROADWAY DITCH CROSS SECTION

DRAWN BY:	K.D.P.	DATE:	2-4-97
DWG. NAME:	PRIMROAD		
APPROVED BY:	R.E.P.	SCALE:	NONE

K:\S\PRIMROAD 02/04/97 08:36

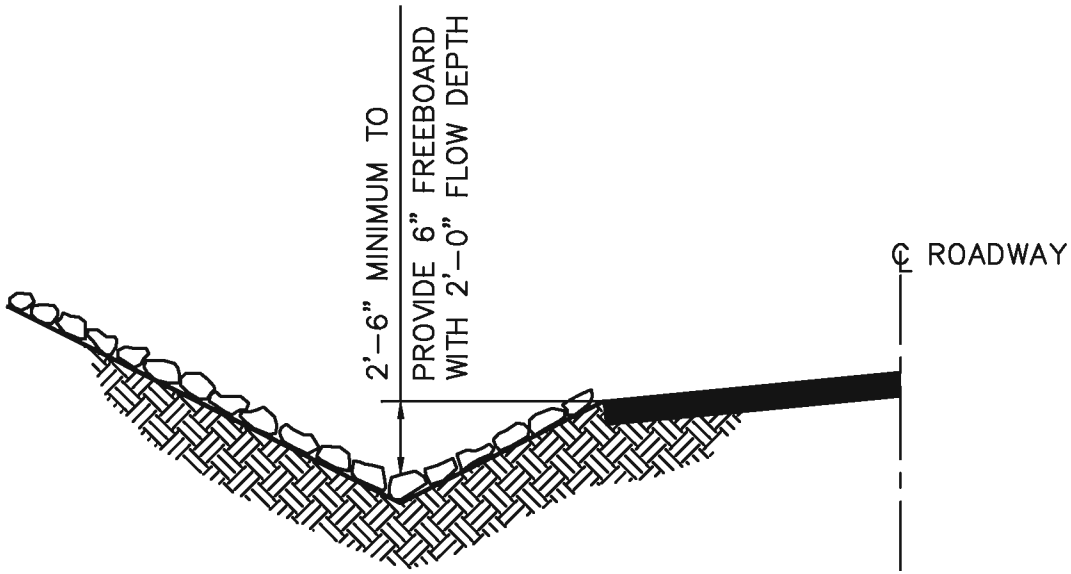

DITCH GRADIENT 5% TO 10%

DITCH CHANNEL TO BE LINED WITH NON-ERODIBLE NON-TOXIC, NON-ACID FORMING SANDSTONE OR LIMESTONE RIP-RAP. THE RIP-RAP WILL BE "CLASS 1" RIP-RAP AND HAVE A MINIMUM THICKNESS OF 12".

PERC ENGINEERING CO., INC.

TYPICAL PRIMARY ROADWAY DITCH CROSS SECTION

DRAWN BY:	K.D.P.	DATE:	2-4-97
DWG. NAME:	PRIMRD1		
APPROVED BY:	R.E.P.	SCALE:	NONE

K:\S\PRIMRD1 02/04/97 08:31

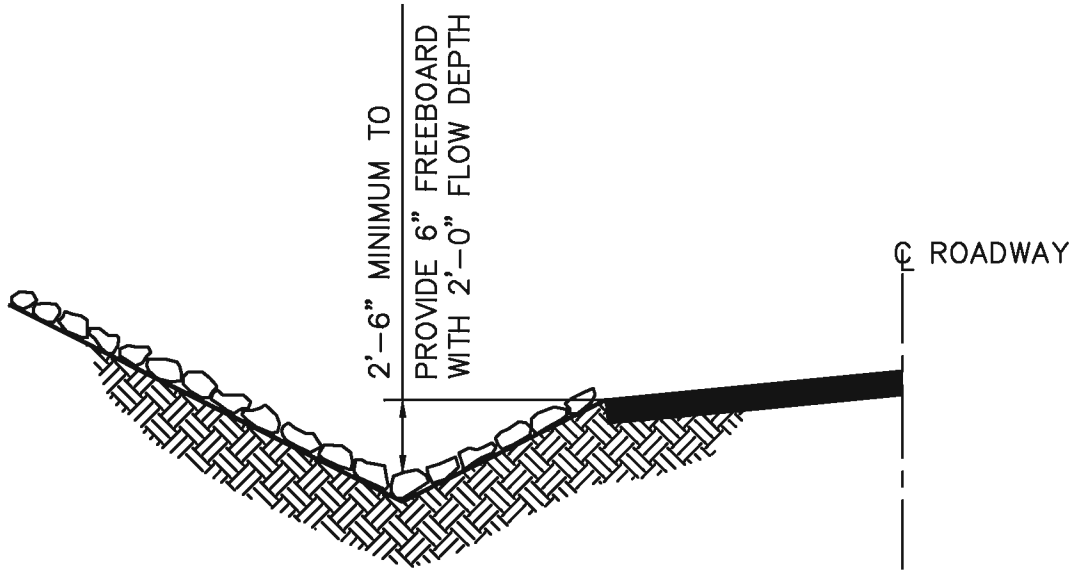

DITCH GRADIENT 11% TO 17%

DITCH CHANNEL TO BE LINED WITH NON-ERODIBLE NON-TOXIC, NON-ACID FORMING SANDSTONE OR LIMESTONE RIP-RAP. THE RIP-RAP WILL BE "CLASS 2" RIP-RAP AND HAVE A MINIMUM THICKNESS OF 16".

PERC ENGINEERING CO., INC.

TYPICAL PRIMARY ROADWAY DITCH CROSS SECTION

DRAWN BY:	K.D.P.	DATE:	2-4-97
DWG. NAME:	PRIMRD2		
APPROVED BY:	R.E.P.	SCALE:	NONE

K:\S\PRIMRD2 02/04/97 08:33

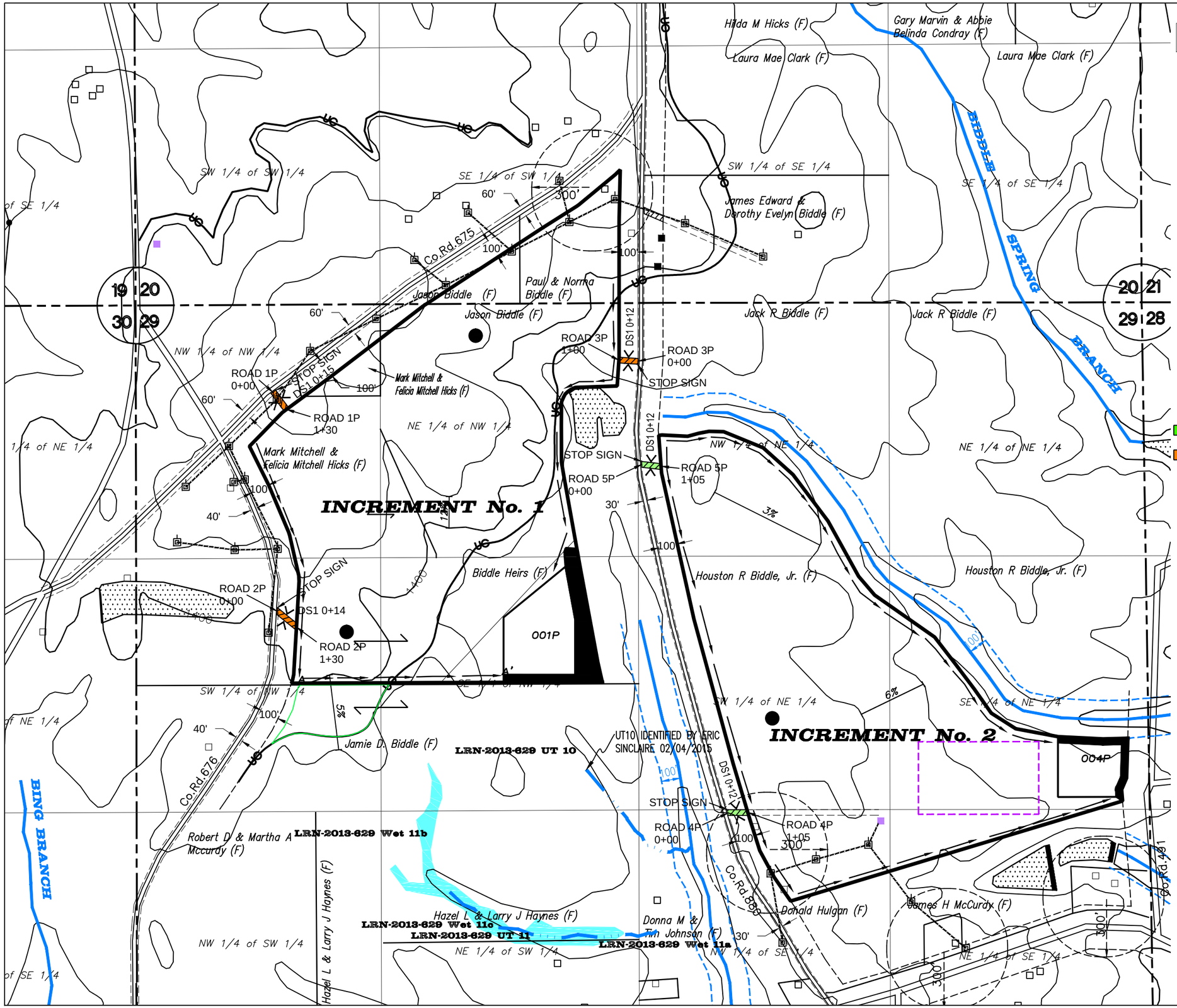

LEGEND

- Permit Boundary
- Previously Surface Mined by Others
- Occupied Dwelling
- Unoccupied Dwelling
- Out Buliding (Barn, Garage, Etc.)
- 700 Surface Contour
- 001P Sediment Basin
- Perennial Stream
- 100' Stream Offset
- Intermittent Stream
- Natural Drainage Course
- County Road (Paved unless otherwise designated)
- Road (Private unless otherwise shown)
- Primary Road
- Ancillary Road
- Impounded Water
- Property Line other than Forty Line
- Land Hook
- 100' Setback from Road
- UC Upper Cliff Coal Outcrop
- Diversion Ditch
- Temporary Spoil Fill No. 1
- Coal Stockpile, Location Subject to Change
- Area bonded under Increment No. 3, Primary Road
- Area bonded under Increment No. 4, Primary Road

Scale: 1" = 500'

N

V:\Mining\Ridgeholm Energy Partners\John Poe Mine P-3981\REP.JPM.dwg 11/30/15 13:55

PERC ENGINEERING CO., INC.
1606 Hwy. 78 West Jasper, AL 35501/P.O. Box 1712-35502
(205) 384-5553 Office (205) 295-3114 Fax

RIDGEHOLM ENERGY PARTNERS, LLC.
JOHN POE MINE / P-3981
ATTACHMENT III-B-5
ROAD LOCATION MAP

.DWG NAME:	REPJPM	DATE:	11-30-2015
DRAWN BY:	S.A.E.	SCALE:	1"=500'
APPROVED BY:	T.S.T.	JOB NUMBER:	15-04482-002

RIDGEHOLM ENERGY PARTNERS, LLC
ATTACHMENT III-B-5(b)

JOHN POE MINE
P-3981
DEKALB COUNTY, ALABAMA

BY
PERC ENGINEERING CO., INC.
P.O. BOX 1712
JASPER, ALABAMA 35502

APRIL 29, 2015

PERC
ENGINEERING CO., INC.

Telephone: (205) 384-5553
Facsimile: (205) 295-3114 - Main Building
(205) 295-3115 - Water Lab
Web Address: www.percengineering.com

April 29, 2015

Mr. Stephen Miles, P.E.
Alabama Surface Mining Commission
Post Office Box 2390
Jasper, Alabama 35502-2390

RE: Ridgeholm Energy Partners, LLC
John Poe Mine
P- 3981

Dear Stephen:

I hereby certify the attached detailed design plans for Primary Road 1P, Road 2P, Road 3P, Road 4P and Road 5P for the above referenced mine are in accordance with the Regulations of the Alabama Surface Mining Commission as adopted by Act 81-435 of December 18, 1981 and amended to date, and are true and correct to the best of my knowledge and belief.

If you have any questions or required additional information, please feel free to call me at 205-295-3127 or e-mail lstephens@percengineering.com.

Sincerely,
PERC Engineering Co., Inc.

Leslie G. Stephens, P.E., P.L.S.
Alabama Registration No. 14117-E

ALABAMA
REGISTERED
No.14117

P.O. Box 1712 • Jasper, Alabama 35502 • 1606 Highway 78 West • Jasper, Alabama 35501

SPECIFICATIONS FOR THE CONSTRUCTION, MAINTENANCE AND RECLAMATION OF PRIMARY ROADS

1. Primary roads shall be designed by or under the direction of a registered professional engineer in accordance with the Alabama Surface Mining Commission rules and regulations and prudent engineering practice.

2. Each roadway embankment will be designed and constructed so as to have a minimum static safety factor of 1.3.

3. To the extent possible, roads will be located on ridges or on the most stable available slopes to prevent or minimize erosion, downstream sedimentation and flooding in an effort to prevent adverse effects to fish, wildlife and related environmental values.

4. To the extent possible, roads will be located above the sediment basins to be constructed for the mining operation in an effort to control or prevent additional contributions of suspended solids to stream flow or runoff outside the permit area and to comply with State and Federal water quality standards applicable to receiving waters and avoid the alteration of the normal flow of water in streambeds or drainage channels while preventing or controlling damage to public or private property. Where it is not possible or is impractical to locate roads in this manner, sediment control devices such as silt fencing, hay bale check dams and rock filter check dams will be used as necessary to maintain water quality. No fording of intermittent or perennial streams will be conducted unless specifically approved by the Alabama Surface Mining Commission as temporary routes to be used during road construction.

5. Prior to construction, the roadway will be cleared, grubbed and will have the topsoil removed. The clearing limits will be kept to the minimum necessary to accommodate the roadbed and associated ditch construction.

6. Roads will be constructed of suitable compacted subgrade material. The material will be free of sod, roots, stones over 12 inches in diameter, and other objectionable materials. The material will be placed and spread over the entire fill area, starting at the lowest point in layers not to exceed 12 inches in thickness. The material will be compacted to 95 percent of the density, based on standard proctor as outlined in ASTM.

7. Primary roads will have a minimum width of eighteen feet and a maximum width necessary to accommodate the largest equipment traveling the road.

8. Roadbeds will be cut to consolidated non-erodible material or will be surfaced with durable non-toxic, non-acid forming substances. The wearing surface will consist of durable sandstone, chert, crushed limestone, crushed concrete, crushed asphalt, red rock, ironore refuse, gravel, or other durable non-toxic, non-acid forming material approved by the Regulatory Authority. The wearing surface will be placed on the roadbed to a depth of four inches.

9. No sustained grades will exceed ten percent unless deemed necessary, in which case appropriate sediment control facilities will be constructed. If grades in excess of fifteen percent are required, cross drains, ditch relief drains and road drainways will be located at a minimum distance of three-hundred feet.

10. Roads will be constructed so as to have adequate drainage utilizing ditches, culverts, cross drains and ditch relief drains designed to safely pass the peak runoff from a ten year, six hour precipitation event. Drainage pipes and culverts shall be installed as designed and will be maintained in a free and operating condition to prevent and control erosion at inlets and outlets. Culverts have been designed to support the load of the heaviest equipment to travel the road and are based on the Handbook of Steel Drainage and Highway Construction Products by the American Iron and Steel Institute and the equipment specifications. Drainage ditches will be constructed and maintained in accordance with the approved design to prevent uncontrolled drainage over the road surface and embankment. Roads will not be located in the channel of an intermittent or perennial stream unless specifically approved by the Alabama Surface Mining Commission. Additionally, no relocation and/or alteration of an intermittent or perennial stream will be done unless specifically approved by the Alabama Surface Mining Commission. In the event that it becomes evident that any drainage structures including culverts, bridges and/or low water crossings will be required in order to cross an intermittent or perennial stream, the structure will be designed and constructed in accordance with Alabama Surface Mining Commission requirements and prudent engineering practice and the approval of the design(s) will be acquired

prior to the commencement of construction. Hay bale check dams and silt fences will be used at strategic locations when necessary to control sediment runoff. Immediately upon completion of construction, the side slopes of the road embankments and/or cuts will be fertilized, seeded with annual and perennial grasses and mulch will be added to aid in the prevention of erosion and to enhance seed germination. The seed mix will consist of, but is not limited to, some combination of the following species: bermuda grass, fescue, lespedeza, rye grass, brown top millet, clover and vetch. The particular species to be planted will vary with the planting season at the time of seed application. Upon completion of construction of each phase of the roadway the construction will be certified to the Alabama Surface Mining Commission as having been done in accordance with the approved plans for the roadway and associated facilities.

11. Routine maintenance will be required to assure that the road continually meets performance standards and will consist of periodic grading, resurfacing, dust suppression and maintenance of sediment control facilities. Dust suppression will consist of the application of water, chemical binders and/or other dust suppressants. No oil will be utilized in this process. Spot seeding, fertilizing and mulching will be performed as necessary to improve vegetative cover on roadway slopes. A road damaged by a catastrophic event shall be repaired as soon as practicable after the damage has occurred.

12. Roads not to be retained as part of the post mine land use shall be reclaimed in accordance with the approved reclamation plan for this permit as soon as practicable after they are no longer needed as part of the mining and reclamation operation, using the following procedures:

    a. The road will be closed to traffic.
    b. All bridges, culverts and other drainage structures not approved as part of the post mine land use will be removed.
    c. All road surfacing materials that are not compatible with the post mine land use or revegetation requirements will be properly disposed of on-site or removed from the site for re-use.
    d. Roadway cut and fill slopes shall be regraded and reshaped to be compatible with the post mine land use and to compliment the natural drainage pattern of the surrounding terrain.
    e. The natural drainage patterns shall be protected from

surface runoff and erosion utilizing the installation of dikes and/or cross drains as necessary.

f. The roadbed shall be ripped or scarified as necessary, the topsoil or substitute or approved growing medium shall be replaced and revegetated in accordance with the approved reclamation plan for this permit.

13. The drawings and data contained in the specific design plans illustrate typical roadbed configurations for primary roads as well as site specific design of drainage structures, stability analysis and ditch sections.

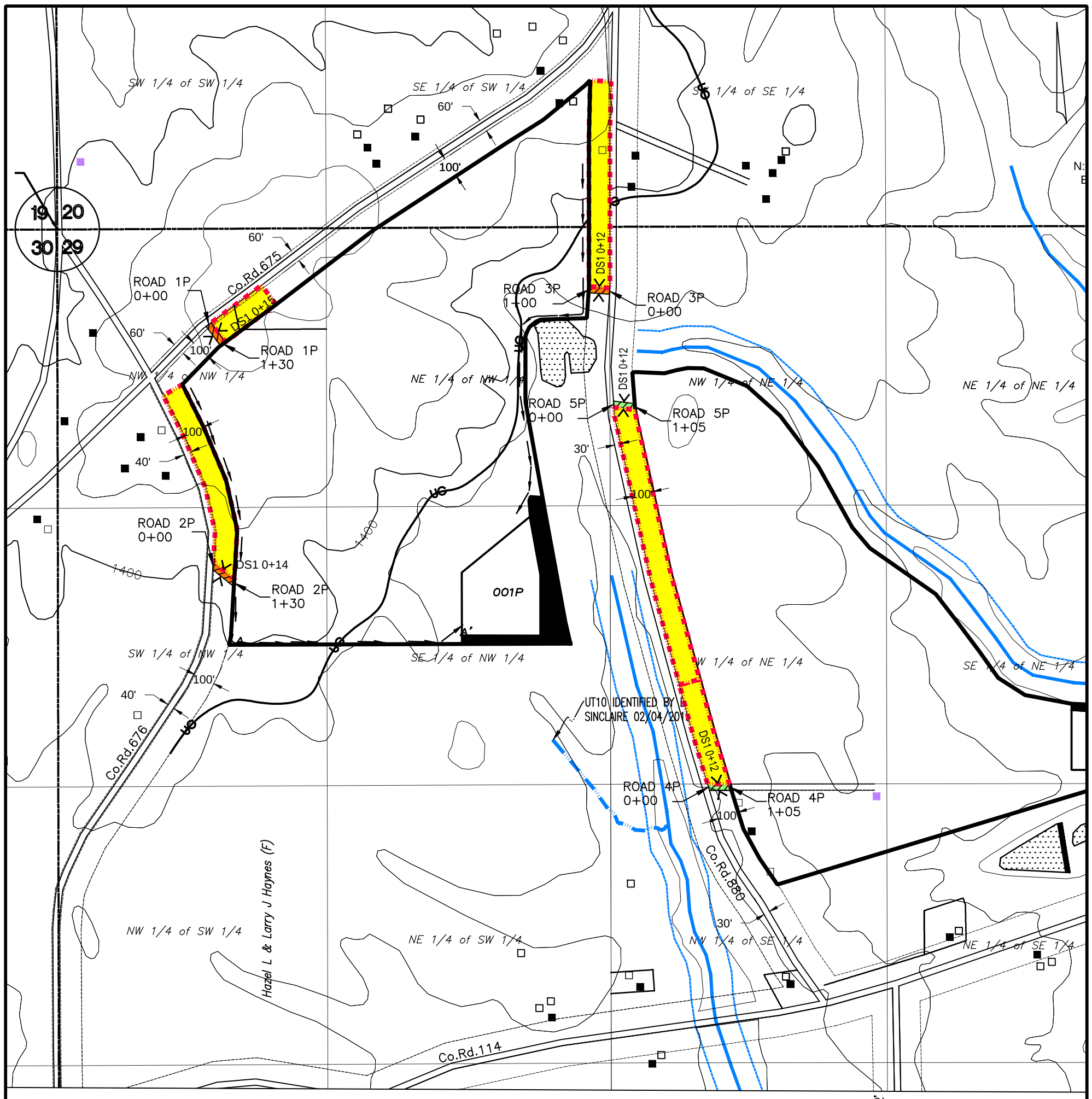

LEGEND

- PERMIT BOUNDARY
- 1400 SURFACE CONTOUR
- OCCUPIED DWELLING
- Unoccupied Dwelling
- Out Buliding (Barn, Garage, Etc.)
- DRAINAGE COURSE
- INTERMITTENT STREAM
- PERENNIAL STREAM
- DIVERSION DITCH
- N:1484541.73 E:689031.68 ALABAMA EAST ZONE NAD83 STATE PLANE COORDINATES IN FEET
- LAND HOOK, CONVEYS SURFACE–MINERAL OWNERSHIP
- 001P SEDIMENT BASIN
- IMPOUNDED WATER
- PRIMARY ROAD
- HIGHWAY R.O.W. CURVE NUMBER, 74
- WATERSHED DIVIDE

Base Map Dugout Valley, Alabama
U.S.G.S. 7.5 Minute Quadrangle Sheet

Township 5 South, Range 9 East
Dekalb County, Alabama

PERC ENGINEERING CO., INC.
1606 Highway 78 West Jasper, Alabama 35501
P.O. Box 1712 Jasper, Alabama 35502
(205) 384-5553 Office (205) 384-9491 Fax

Attachment III-B-5
Watershed Map
P-3981
Ridgeholm Energy Partners LLC
John Poe Mine

DRAWN BY: S.W.L.	DATE: 11/30/2015
DWG. NAME: PRIMARY ROADS	
APPROVED BY: L.G.S.	SCALE: 1"=500'

V:\Mining\Ridgeholm Energy Partners\John Poe Mine P-3981\PRIMARY ROADS.dwg 11/30/15 14:25

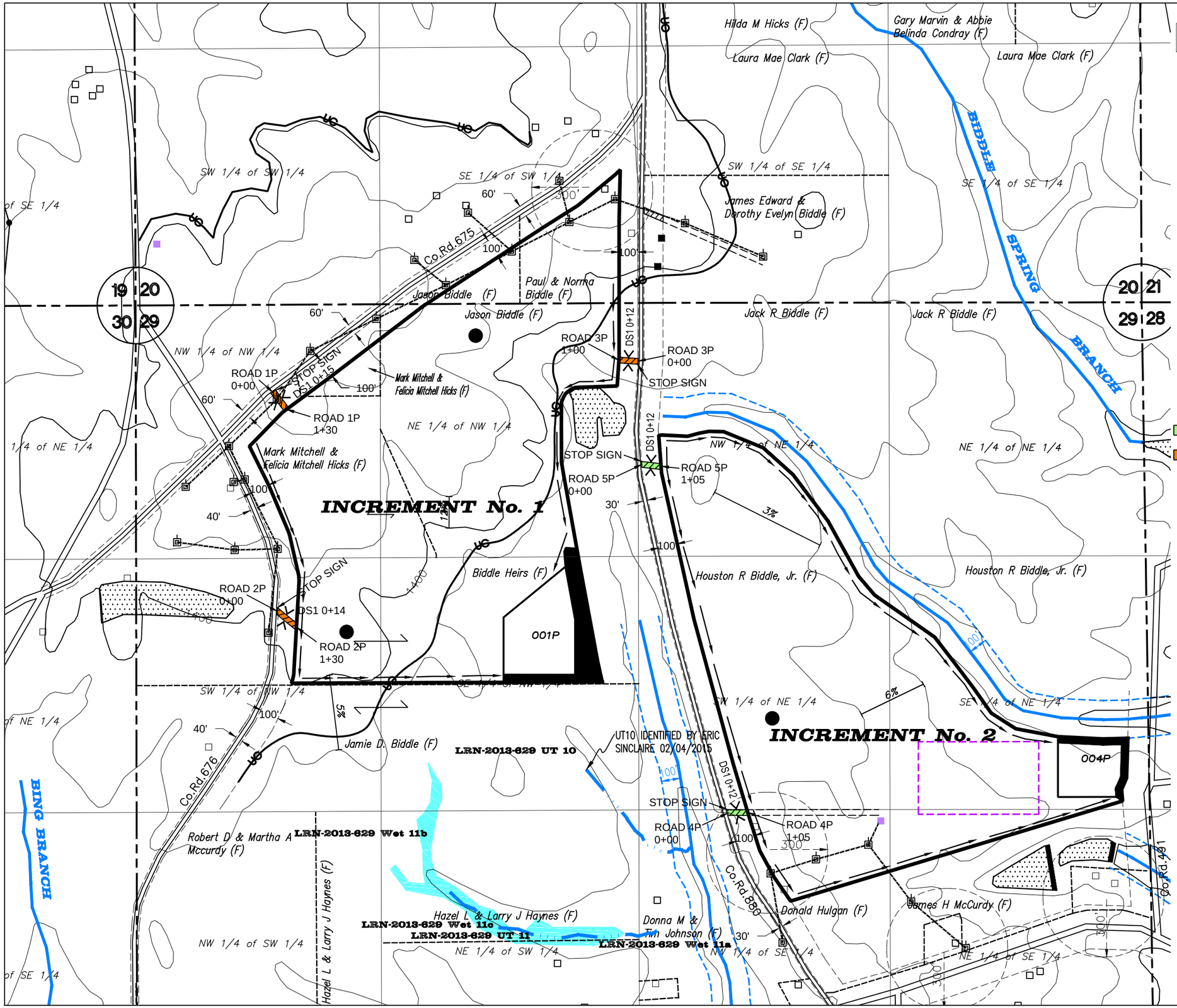

LEGEND

- Permit Boundary
- Previously Surface Mined by Others
- Occupied Dwelling
- Unoccupied Dwelling
- Out Buliding (Barn, Garage, Etc.)
- 700 Surface Contour
- 001P Sediment Basin
- Perennial Stream
- 100' Stream Offset
- Intermittent Stream
- Natural Drainage Course
- County Road (Paved unless otherwise designated)
- Road (Private unless otherwise shown)
- Primary Road
- Ancillary Road
- Impounded Water
- Property Line other than Forty Line
- Land Hook
- 100' Setback from Road
- UC Upper Cliff Coal Outcrop
- Diversion Ditch
- Temporary Spoil Fill No. 1
- Coal Stockpile, Location Subject to Change
- Area bonded under Increment No. 3, Primary Road
- Area bonded under Increment No. 4, Primary Road

Scale: 1" = 500'

N

V:\Mining\Ridgeholm Energy Partners\John Poe Mine P-3981\REP.JPM.dwg 11/18/15 11:29

PERC ENGINEERING CO., INC.
1606 Hwy. 78 West Jasper, AL 35501/P.O. Box 1712-35502
(205) 384-5553 Office (205) 295-3114 Fax

RIDGEHOLM ENERGY PARTNERS, LLC.
JOHN POE MINE / P-3981
ATTACHMENT III-B-5
ROAD LOCATION MAP

.DWG NAME:	REPJPM	DATE:	04-03-2015
DRAWN BY:	S.A.E.	SCALE:	1"=500'
APPROVED BY:	T.S.T.	JOB NUMBER:	15-04482-002

TYPICAL PRIMARY HAUL ROAD
CUT SECTION
NO SCALE

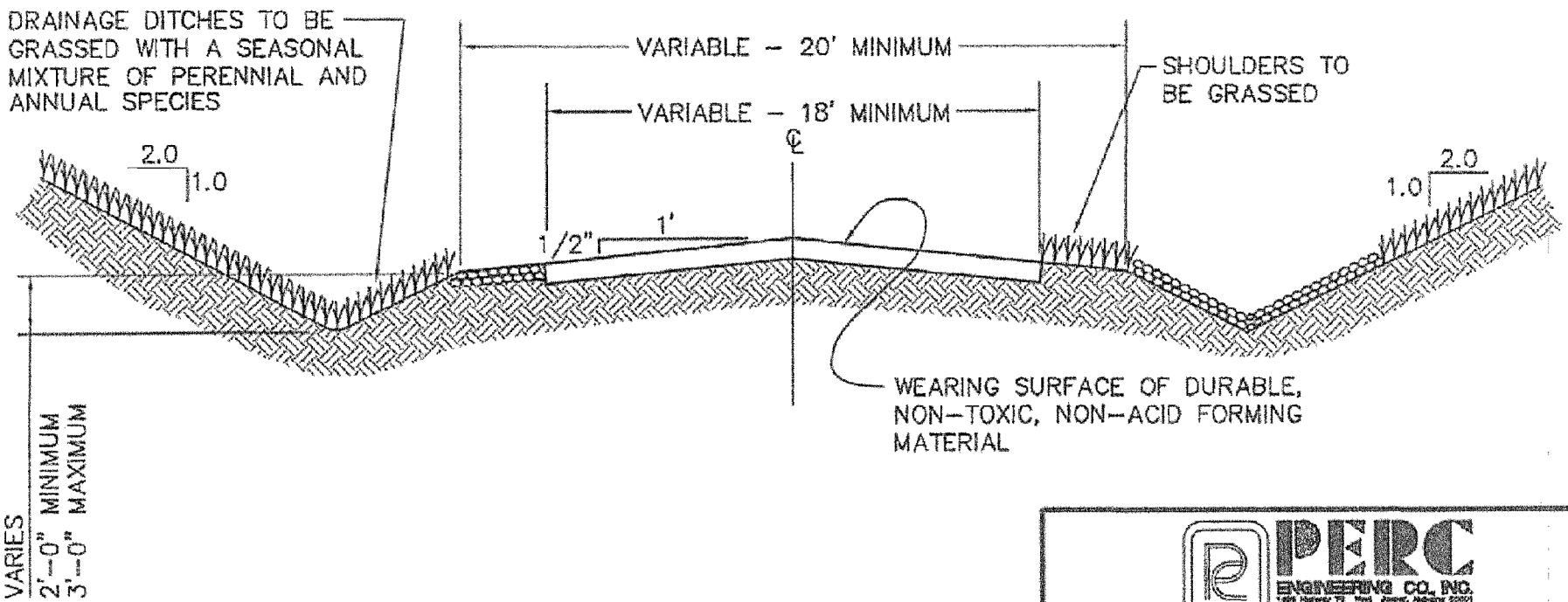

PERC ENGINEERING CO. INC.

TYPICAL CUT SECTION
PRIMARY HAUL ROAD

DRAWN BY: S.W.L. DWG. NAME: TYPHAULC	DATE: 12–10–2006
APPROVED BY: L.G.S.	SCALE: NONE

ATTACHMENT III.–B.–5.

TYPICAL PRIMARY HAUL ROAD
FILL SECTION

NO SCALE

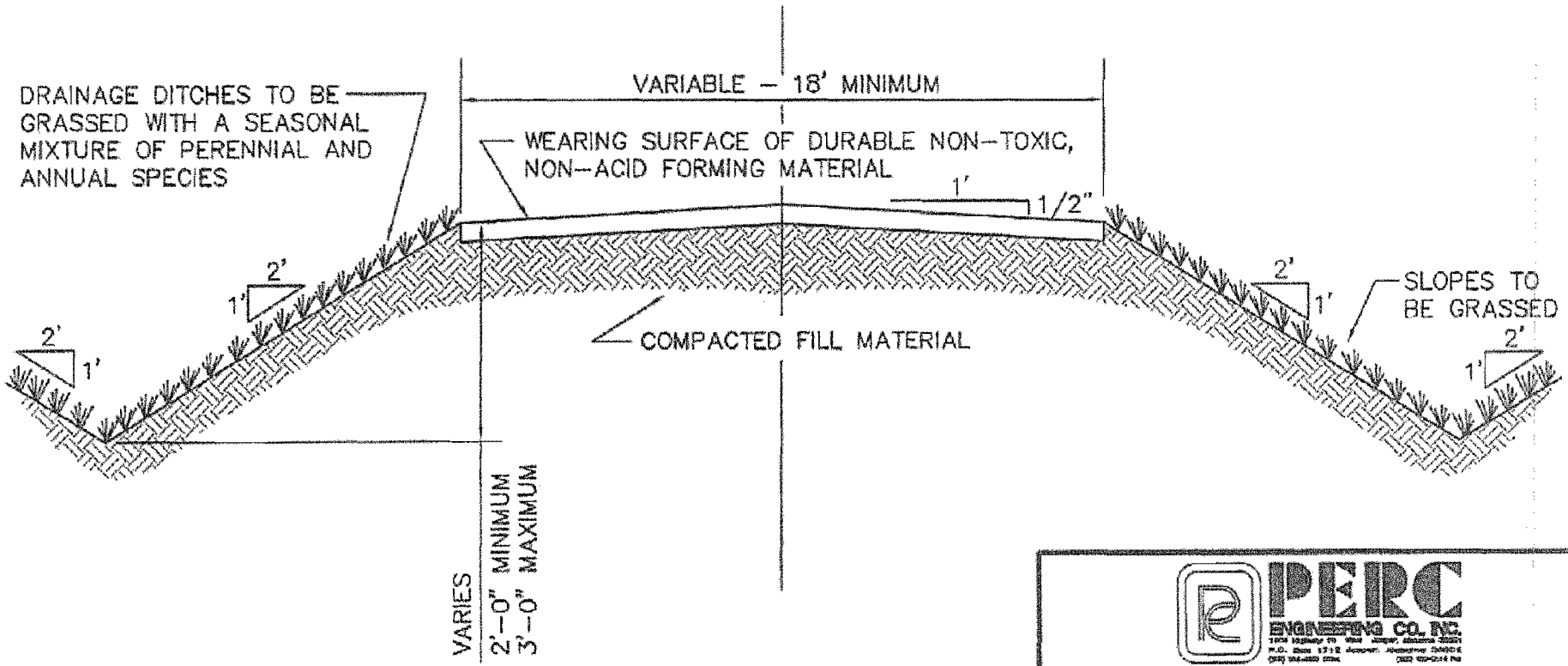

PERC ENGINEERING CO. INC.

TYPICAL FILL SECTION
PRIMARY HAUL ROAD

DRAWN BY: S.W.L. DWG. NAME: TYPHAULF	DATE: 12–10–2006
APPROVED BY: L.G.S.	SCALE: NONE

ATTACHMENT III.–B.–5.

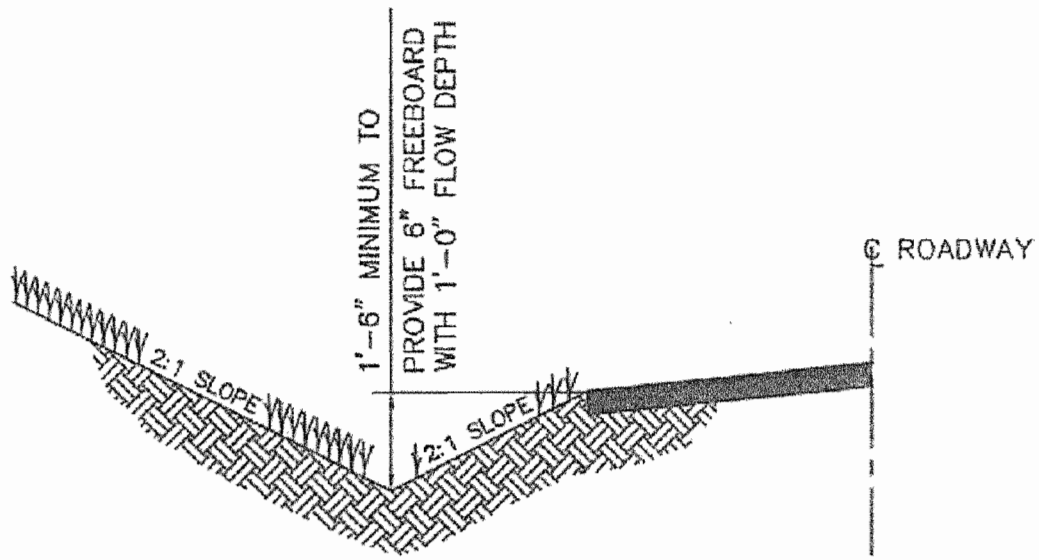

MINIMUM DITCH GRADIENT = 1%

MAXIMUM DITCH GRADIENT = 5%

DITCH CHANNEL TO BE VEGETATED WITH A MIXTURE OF BERMUDA GRASS, FESCUE, AND LESPEDEZA TO CONFORM TO CLASS "D" RETARDANT CLASS.

PERC ENGINEERING CO., INC.

TYPICAL PRIMARY ROADWAY DITCH CROSS SECTION

DRAWN BY: K.E.P. DWG. NAME: PRIMRD3	DATE: 1-30-08
APPROVED BY: W.P.G.	SCALE: NONE

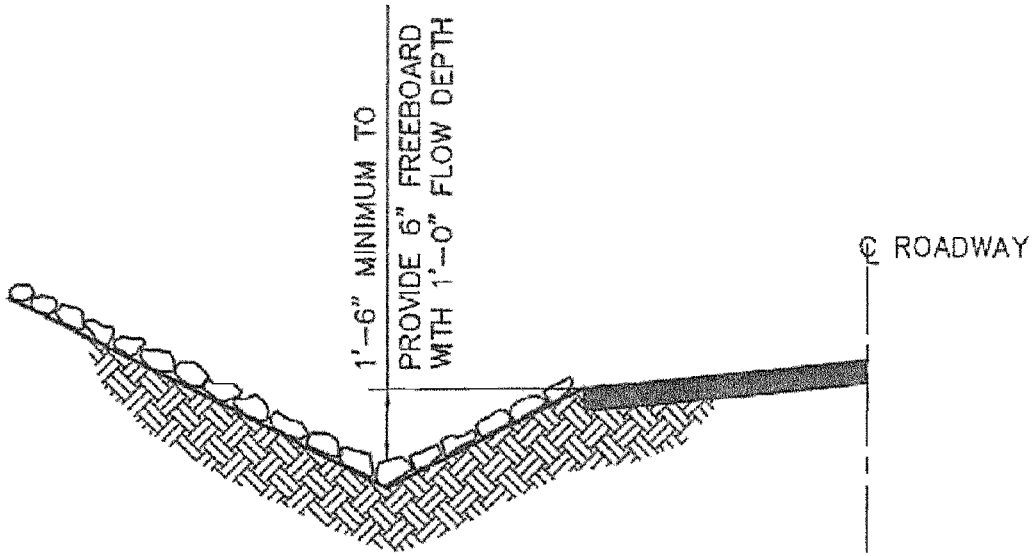

DITCH GRADIENT 5% TO 10%

DITCH CHANNEL TO BE LINED WITH NON-ERODIBLE NON-TOXIC, NON-ACID FORMING SANDSTONE OR LIMESTONE RIPRAP. THE RIPRAP WILL BE "CLASS 1" RIPRAP AND HAVE A MINIMUM THICKNESS OF 12".

PERC ENGINEERING CO., INC.

TYPICAL PRIMARY ROADWAY DITCH CROSS SECTION

DRAWN BY: K.E.P. DWG. NAME: PRIMRD4	DATE: 1-30-08
APPROVED BY: W.P.G.	SCALE: NONE

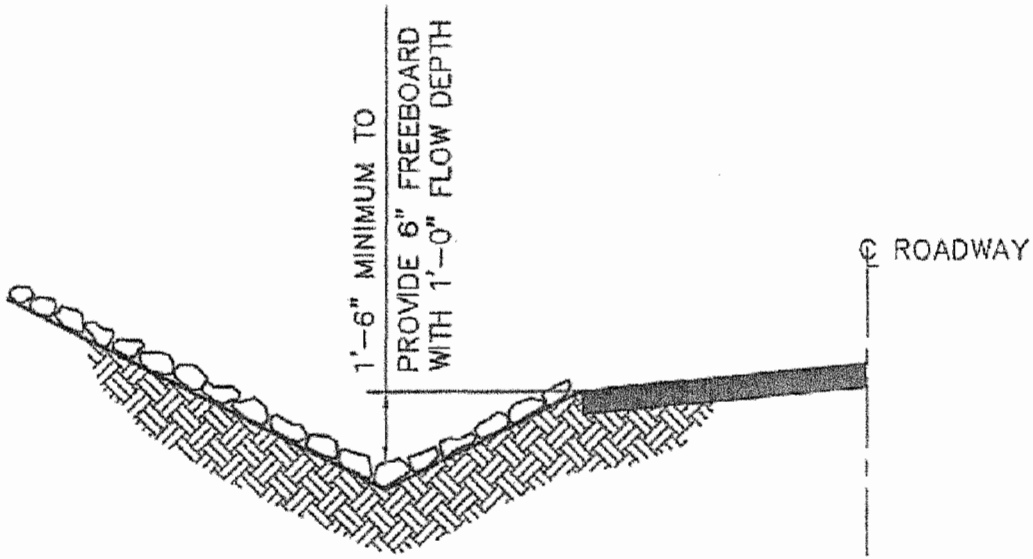

DITCH GRADIENT 11% TO 17%

DITCH CHANNEL TO BE LINED WITH NON-ERODIBLE NON-TOXIC, NON-ACID FORMING SANDSTONE OR LIMESTONE RIPRAP. THE RIPRAP WILL BE "CLASS 2" RIPRAP AND HAVE A MINIMUM THICKNESS OF 16".

PERC ENGINEERING CO., INC.

TYPICAL PRIMARY ROADWAY DITCH CROSS SECTION

DRAWN BY:	K.E.P.	DATE:	1-30-08
DWG. NAME:	PRIMRD5		
APPROVED BY:	W.P.G.	SCALE:	NONE

NOTES

1) Due to there being no significant cut or fill sections on Primary Roads 1P, 2P, 3P, 4P and 5P, no stability analysis is required.
2) A stop sign will be placed 15' from the edge of pavement or gravel roadway of the County road for the outgoing lane on each & every Primary Road.

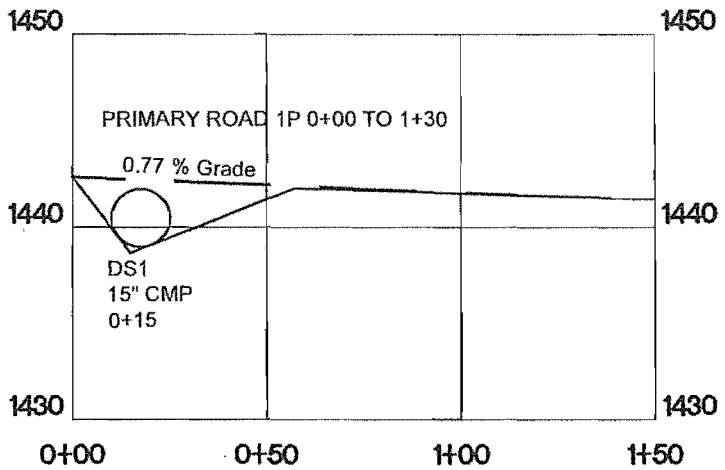

PRIMARY ROAD 1P

EXISTING GRADE

PROPOSED GRADE

NOTE: PROPOSED GRADES SHOWN MAY VARY FROM 0% TO 17%

PERC ENGINEERING CO., INC.

1900 Highway 78 West Jasper, Alabama 35501
P.O. Box 1712 Jasper, Alabama 35502
(205) 384-0900 office (205) 384-9114 fax

RIDGEHOLM ENERGY PARTNERS, LLC
JOHN POE MINE
P-3981
PRIMARY ROAD PROFILE

DRAWN BY: S.W.L. DWG. NAME: PRIMARY ROADS	DATE: 5/20/2015
APPROVED BY: L.G.S.	SCALE: AS NOTED

\\PERCSOD\perc_eng\Ridgeholm Energy Partners\John Poe Mine P-3981\PRIMARY ROADS.dwg 05/20/15 16:21

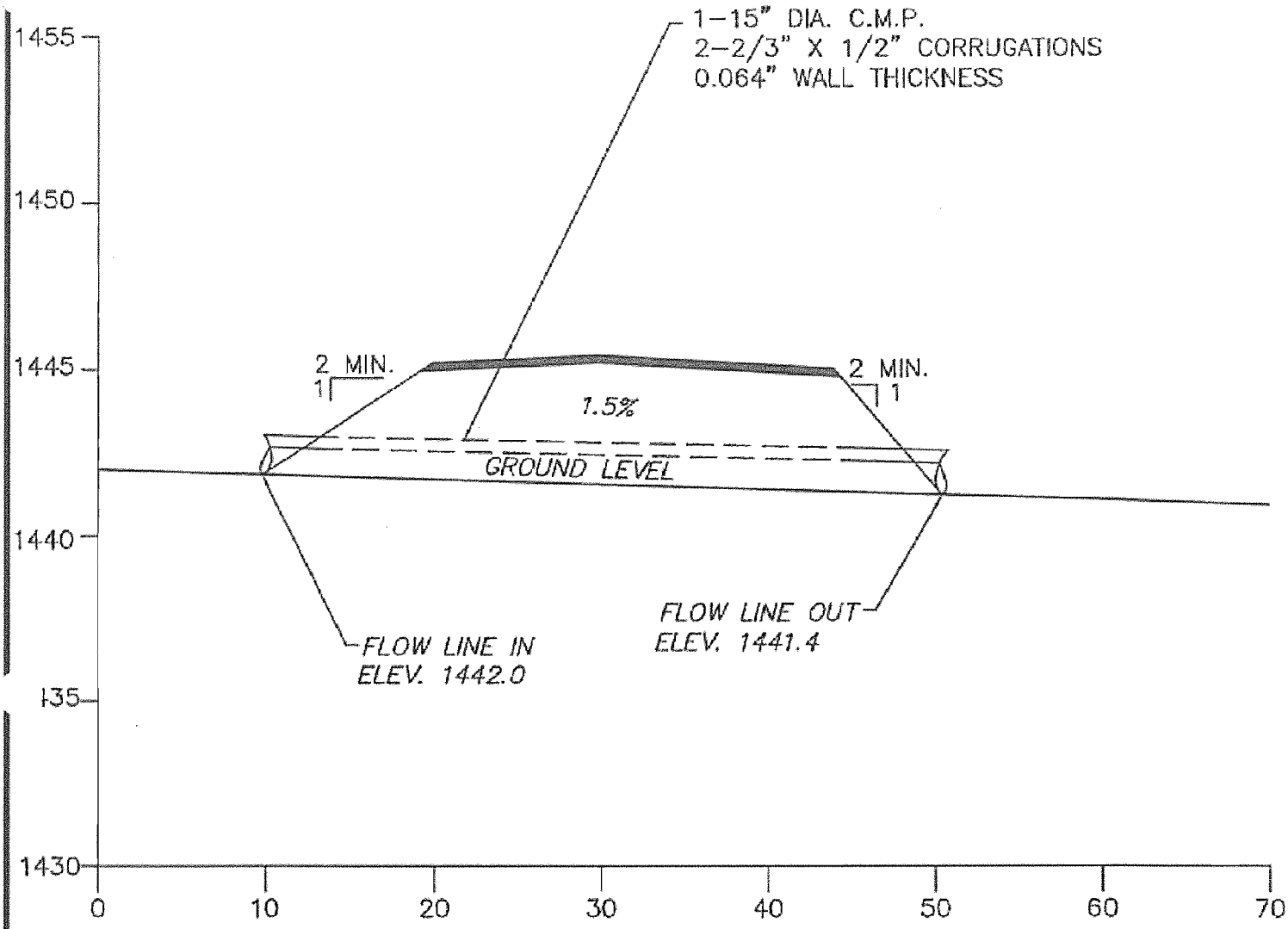

Hydraulics Information

Drainage Area = 1.0 Acres
10 YR.-6 HR., Q = 2.97 C.F.S.
Maximum Water Elev. = 1444.0
Minimum Fill Elev. = 1445.0
Maximum Allowable Cover 15" C.M.P. 198'
Minimum Allowable Cover 15" C.M.P. = 1'
Wall Thickness = 0.064"
Minimum Freeboard = 1'

PERC ENGINEERING CO., INC.

RIDGEHOLM ENERGY PARTNERS LLC
JOHN POE MINE
P-3981
PRIMARY ROAD 1P CROSS SECTION
DS1 0+15

DRAWN BY: S.W.L. DWG. NAME: BWMPMHR1RCS	DATE: 4-29-15
APPROVED BY: L.G.S.	SCALE: AS NOTED

Ridgeholm Energy Partners LLC
John Poe Mine
P-3981
Primary Road 1P
Drainage Structure DS1 0+15

4.3 Inches, 10 Year - 6 Hour

SCS 6 Hour Event

LGS

General Information

Storm Information:

Storm Type:	NRCS Type II
Design Storm:	10 yr - 6 hr
Rainfall Depth:	4.300 inches

Structure Networking:

Type	Stru #	(flows into)	Stru #	Musk. K (hrs)	Musk. X	Description
Culvert	#1	==>	End	0.000	0.000	Primary Road 1P DS1 0+15

#1
Culvert

Structure Summary:

	Immediate Contributing Area (ac)	Total Contributing Area (ac)	Peak Discharge (cfs)	Total Runoff Volume (ac-ft)
#1	1.000	1.000	2.97	0.15

Structure Detail:

Structure #1 (Culvert)

Primary Road 1P DS1 0+15

Culvert Inputs:

Length (ft)	Slope (%)	Manning's n	Max. Headwater (ft)	Tailwater (ft)	Entrance Loss Coef. (Ke)
40.00	1.50	0.0240	2.00	0.00	0.90

Culvert Results:

Design Discharge = 2.97 cfs

Minimum pipe diameter: 1 - 12 inch pipe(s) required

Subwatershed Hydrology Detail:

Stru #	SWS #	SWS Area (ac)	Time of Conc (hrs)	Musk K (hrs)	Musk X	Curve Number	UHS	Peak Discharge (cfs)	Runoff Volume (ac-ft)
#1	1	1.000	0.022	0.000	0.000	74.000	M	2.97	0.151
	$\sum$	**1.000**						**2.97**	**0.151**

Subwatershed Time of Concentration Details:

Stru #	SWS #	Land Flow Condition	Slope (%)	Vert. Dist. (ft)	Horiz. Dist. (ft)	Velocity (fps)	Time (hrs)
#1	1	8. Large gullies, diversions, and low flowing streams	1.50	4.50	300.00	3.670	0.022
#1	**1**	**Time of Concentration:**					**0.022**

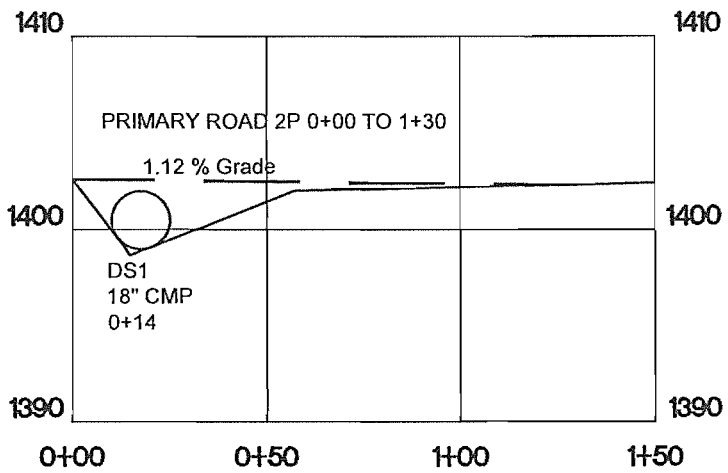

PRIMARY ROAD 2P

EXISTING GRADE

PROPOSED GRADE

NOTE: PROPOSED GRADES SHOWN MAY VARY FROM 0% TO 17%

PERC ENGINEERING CO., INC.

1908 Highway 78 West Jasper, Alabama 35501
P.O. Box 1712 Jasper, Alabama 35502
(205) 384-8853 Office (205) 380-3114 Fax

RIDGEHOLM ENERGY PARTNERS, LLC
JOHN POE MINE
P-3981
PRIMARY ROAD PROFILE

DRAWN BY: S.W.L. DWG. NAME: PRIMARY ROADS	DATE: 5/20/2015
APPROVED BY: L.G.S.	SCALE: AS NOTED

\\PERC600\perc_eng\Mi... eholm Energy Partners\John Poe Mine P-3981\PRIMARY ROADS.dwg 05/20/15 16:31

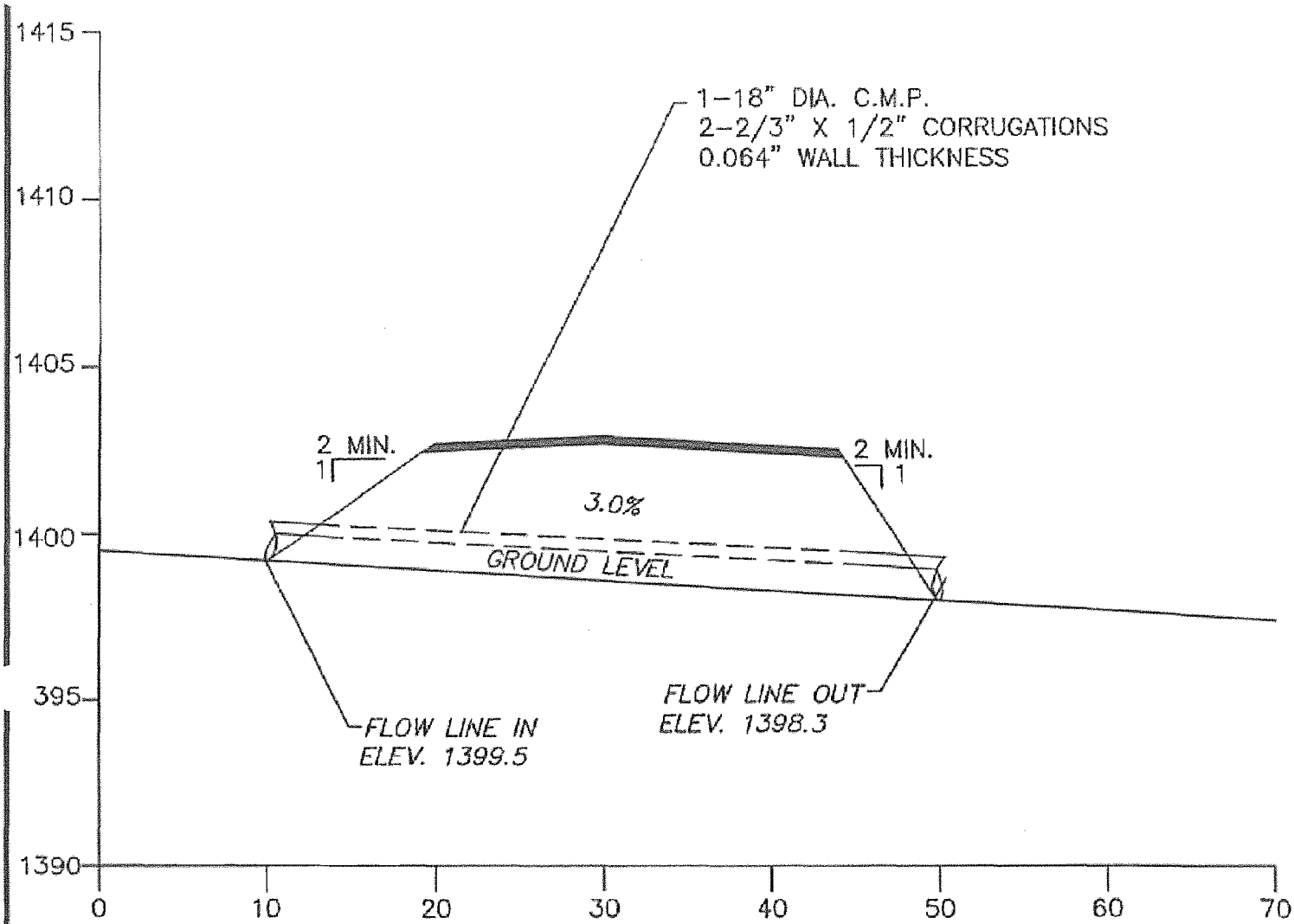

Hydraulics Information

Drainage Area = 3.0 Acres
10 YR.-6 HR., Q = 8.91 C.F.S.
Maximum Water Elev. = 1402.0
Minimum Fill Elev. = 1403.0
Maximum Allowable Cover 18" C.M.P. 166'
Minimum Allowable Cover 18" C.M.P. = 1'
Wall Thickness = 0.064"
Minimum Freeboard = 1'

PERC ENGINEERING CO., INC.

RIDGEHOLM ENERGY PARTNERS LLC
JOHN POE MINE
P-3981
PRIMARY ROAD 2P CROSS SECTION
DS1 0+14

DRAWN BY: S.W.L. DWG. NAME: RHEJPMR1T05 XS	DATE: 4-29-15
APPROVED BY: L.G.S.	SCALE: AS NOTED

Copyright 1998-2010 Pamela J. Schwab

Ridgeholm Energy Partners LLC

John Poe Mine

P-3981

Primary Road 2P

Drainage Structure DS1 0+14

4.3 Inches, 10 Year - 6 Hour

SCS 6 Hour Event

LGS

General Information

Storm Information:

Storm Type:	NRCS Type II
Design Storm:	10 yr - 6 hr
Rainfall Depth:	4.300 inches

Structure Networking:

Type	Stru #	(flows into)	Stru #	Musk. K (hrs)	Musk. X	Description
Culvert	#1	==>	End	0.000	0.000	Primary Road 2P DS1 0+14

#1
Culvert

Structure Summary:

	Immediate Contributing Area (ac)	Total Contributing Area (ac)	Peak Discharge (cfs)	Total Runoff Volume (ac-ft)
#1	3.000	3.000	8.91	0.45

Structure Detail:

Structure #1 (Culvert)

Primary Road 2P DS1 0+14

Culvert Inputs:

Length (ft)	Slope (%)	Manning's n	Max. Headwater (ft)	Tailwater (ft)	Entrance Loss Coef. (Ke)
40.00	3.00	0.0240	2.50	0.00	0.90

Culvert Results:

Design Discharge = 8.91 cfs

Minimum pipe diameter: 1 - 18 inch pipe(s) required

Subwatershed Hydrology Detail:

Stru #	SWS #	SWS Area (ac)	Time of Conc (hrs)	Musk K (hrs)	Musk X	Curve Number	UHS	Peak Discharge (cfs)	Runoff Volume (ac-ft)
#1	1	3.000	0.053	0.000	0.000	74.000	M	8.91	0.453
	$\sum$	**3.000**						**8.91**	**0.453**

Subwatershed Time of Concentration Details:

Stru #	SWS #	Land Flow Condition	Slope (%)	Vert. Dist. (ft)	Horiz. Dist. (ft)	Velocity (fps)	Time (hrs)
#1	1	8. Large gullies, diversions, and low flowing streams	3.00	30.00	1,000.00	5.190	0.053
#1	**1**	**Time of Concentration:**					**0.053**

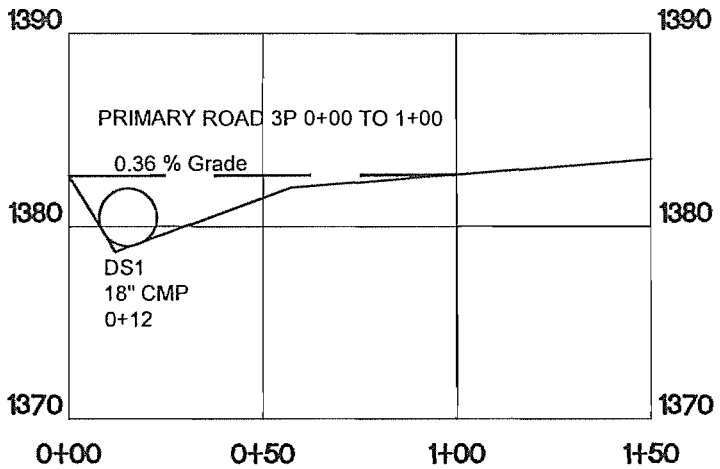

PRIMARY ROAD 3P

EXISTING GRADE

PROPOSED GRADE

NOTE: PROPOSED GRADES SHOWN MAY VARY FROM 0% TO 17%

PERC ENGINEERING CO., INC.
1809 Highway 78 West Jasper, Alabama 35501
P.O. Box 1712 Jasper, Alabama 35502
(205) 384-5553 Office (205) 384-3114 Fax

RIDGEHOLM ENERGY PARTNERS, LLC
JOHN POE MINE
P-3981
PRIMARY ROAD PROFILE

DRAWN BY: S.W.L. DWG. NAME: PRIMARY ROADS	DATE: 5/20/2015
APPROVED BY: L.G.S.	SCALE: AS NOTED

\\PERC600\perc_eng\Ridgeholm Energy Partners\John Poe Mine P-3981\PRIMARY ROADS.dwg 05/20/15 16:21

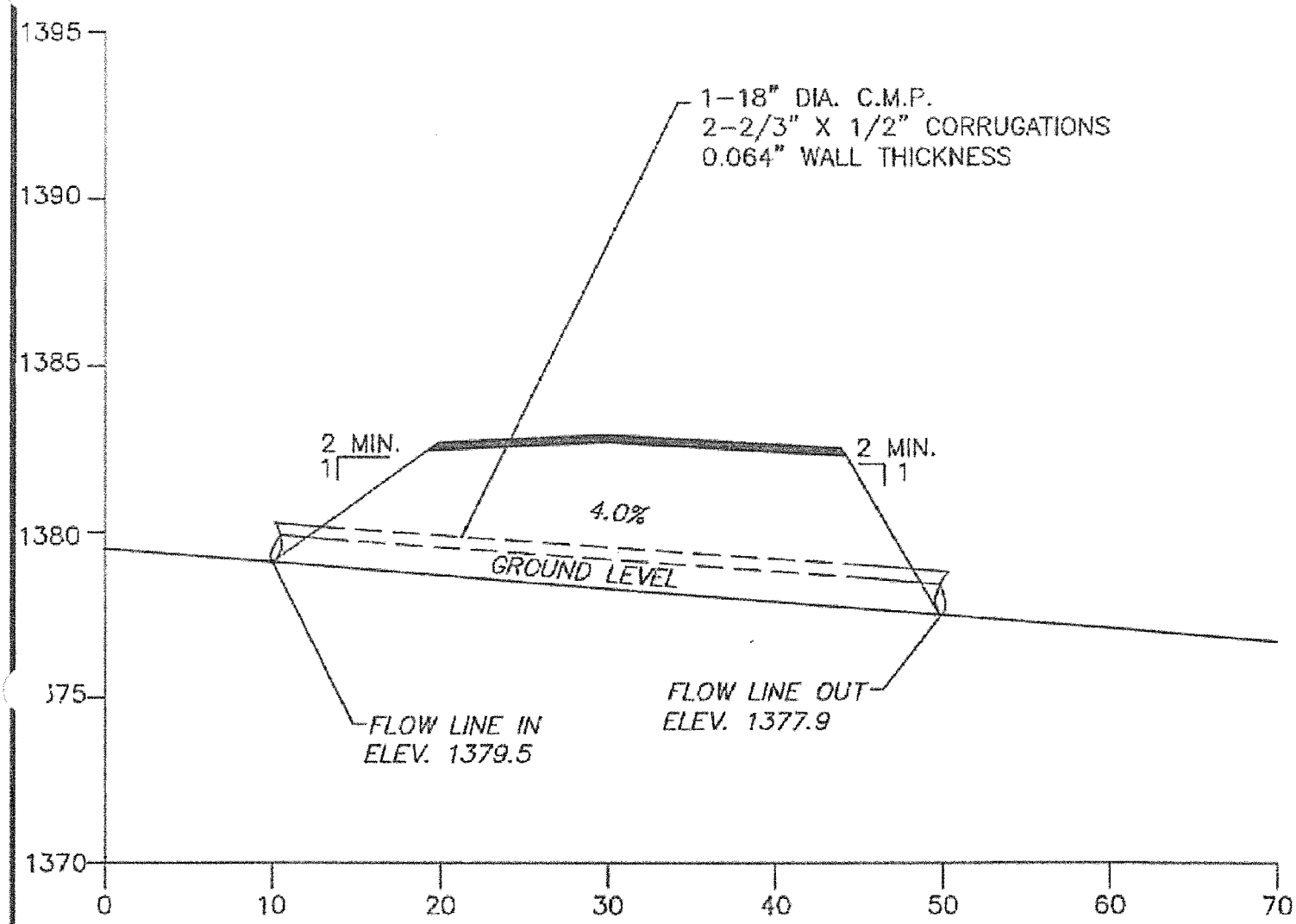

Hydraulics Information

Drainage Area = 2.7 Acres
10 YR.-6 HR., Q = 8.02 C.F.S.
Maximum Water Elev. = 1382.0
Minimum Fill Elev. = 1383.0
Maximum Allowable Cover 18" C.M.P. 166'
Minimum Allowable Cover 18" C.M.P. = 1'
Wall Thickness = 0.064"
Minimum Freeboard = 1'

PERC ENGINEERING CO., INC.

RIDGEHOLM ENERGY PARTNERS LLC
JOHN POE MINE
P-3981
PRIMARY ROAD 3P CROSS SECTION
DS1 0+12

DRAWN BY: S.W.L. DWG. NAME: RHEJPMR1T05 XS	DATE: 4-29-15
APPROVED BY: L.G.S.	SCALE: AS NOTED

Ridgeholm Energy Partners LLC

John Poe Mine

P-3981

Primary Road 3P

Drainage Structure DS1 0+12

4.3 Inches, 10 Year - 6 Hour

SCS 6 Hour Event

LGS

General Information

Storm Information:

Storm Type:	NRCS Type II
Design Storm:	10 yr - 6 hr
Rainfall Depth:	4.300 inches

Structure Networking:

Type	Stru #	(flows into)	Stru #	Musk. K (hrs)	Musk. X	Description
Culvert	#1	==>	End	0.000	0.000	Primary Road 3P DS1 0+12

#1
Culvert

Structure Summary:

	Immediate Contributing Area (ac)	Total Contributing Area (ac)	Peak Discharge (cfs)	Total Runoff Volume (ac-ft)
#1	2.700	2.700	8.02	0.41

Structure Detail:

Structure #1 (Culvert)

Primary Road 3P DS1 0+12

Culvert Inputs:

Length (ft)	Slope (%)	Manning's n	Max. Headwater (ft)	Tailwater (ft)	Entrance Loss Coef. (Ke)
40.00	4.00	0.0240	2.50	0.00	0.90

Culvert Results:

Design Discharge = 8.02 cfs

Minimum pipe diameter: 1 - 18 inch pipe(s) required

Subwatershed Hydrology Detail:

Stru #	SWS #	SWS Area (ac)	Time of Conc (hrs)	Musk K (hrs)	Musk X	Curve Number	UHS	Peak Discharge (cfs)	Runoff Volume (ac-ft)
#1	1	2.700	0.046	0.000	0.000	74.000	M	8.02	0.408
	Σ	**2.700**						**8.02**	**0.408**

Subwatershed Time of Concentration Details:

Stru #	SWS #	Land Flow Condition	Slope (%)	Vert. Dist. (ft)	Horiz. Dist. (ft)	Velocity (fps)	Time (hrs)
#1	1	8. Large gullies, diversions, and low flowing streams	4.00	40.00	1,000.00	6.000	0.046
#1	**1**	**Time of Concentration:**					**0.046**

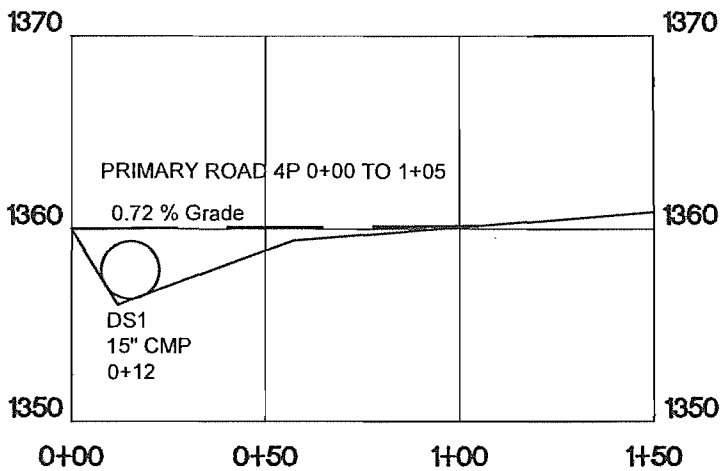

PRIMARY ROAD 4P

EXISTING GRADE

PROPOSED GRADE

NOTE: PROPOSED GRADES SHOWN MAY VARY FROM 0% TO 17%

PERC ENGINEERING CO., INC.

1600 Highway 78 West Jasper, Alabama 35501
P.O. Box 1712 Jasper, Alabama 35502
(205) 384-5851 office (205) 384-3114 fax

RIDGEHOLM ENERGY PARTNERS, LLC
JOHN POE MINE
P-3981
PRIMARY ROAD PROFILE

DRAWN BY: S.W.L. DWG. NAME: PRIMARY ROADS	DATE: 5/20/2015
APPROVED BY: L.G.S.	SCALE: AS NOTED

\\PERC600\perc_eng\Ridgeholm Energy Partners\John Poe Mine P-3981\PRIMARY ROADS.dwg 05/20/15 16:21

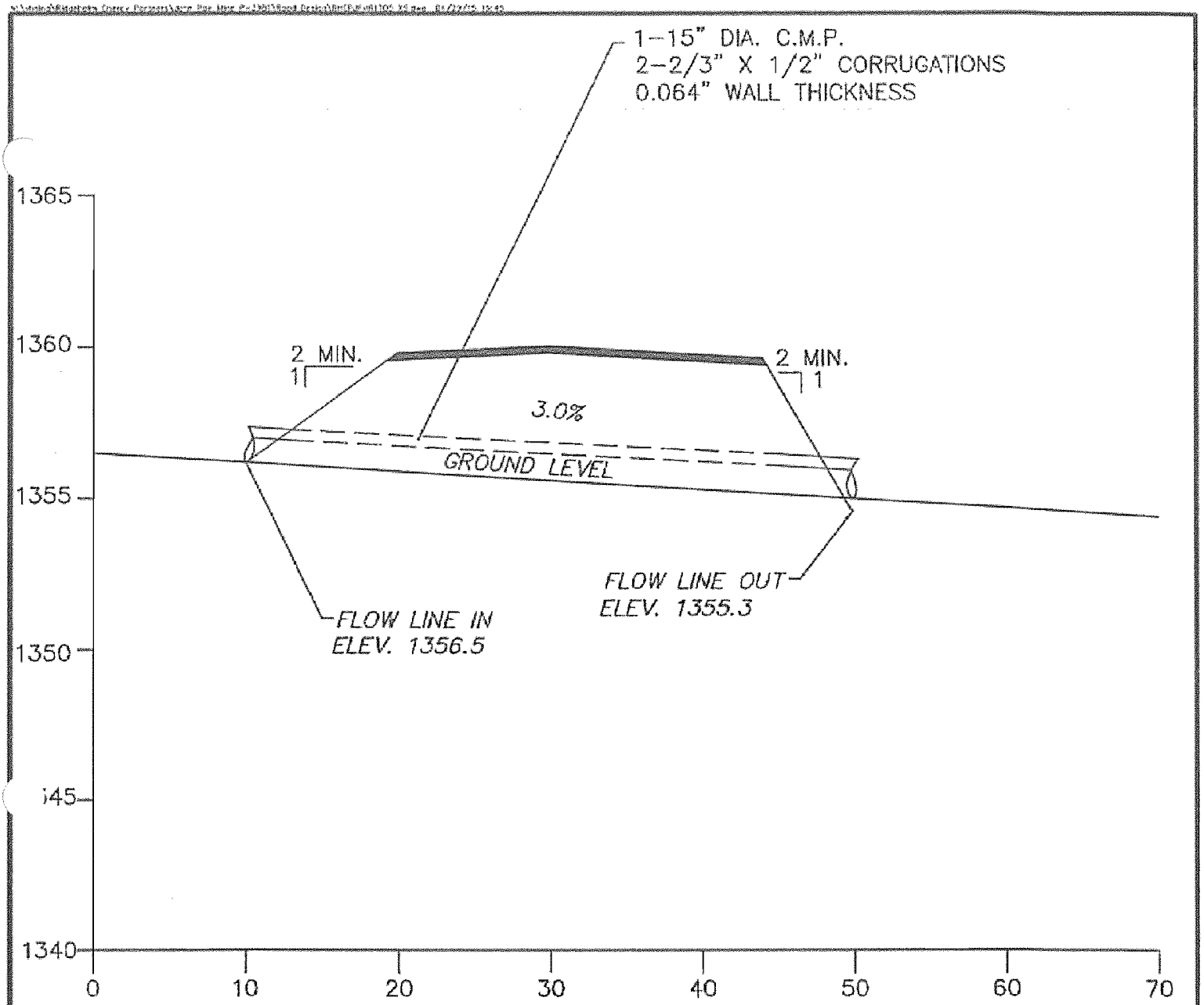

Hydraulics Information

Drainage Area = 1.5 Acres
10 YR.-6 HR., Q = 4.45 C.F.S.
Maximum Water Elev. = 1359.0
Minimum Fill Elev. = 1360.0
Maximum Allowable Cover 15" C.M.P. 198'
Minimum Allowable Cover 15" C.M.P. = 1'
Wall Thickness = 0.064"
Minimum Freeboard = 1'

PERC ENGINEERING CO., INC.

RIDGEHOLM ENERGY PARTNERS LLC
JOHN POE MINE
P-3981
PRIMARY ROAD 4P CROSS SECTION
DS1 0+12

DRAWN BY: S.W.L. DWG. NAME: RHEJPMR1T05 XS	DATE: 4-28-15
APPROVED BY: L.G.S.	SCALE: AS NOTED

Copyright 1998-2010 Pamela L Schwab

Ridgeholm Energy Partners LLC

John Poe Mine

P-3981

Primary Road 4P

Drainage Structure DS1 0+12

4.3 Inches, 10 Year - 6 Hour

SCS 6 Hour Event

LGS

General Information

Storm Information:

Storm Type:	NRCS Type II
Design Storm:	10 yr - 6 hr
Rainfall Depth:	4.300 inches

Structure Networking:

Type	Stru #	(flows into)	Stru #	Musk. K (hrs)	Musk. X	Description
Culvert	#1	==>	End	0.000	0.000	Primary Road 4P DS1 0+12

Structure Summary:

	Immediate Contributing Area (ac)	Total Contributing Area (ac)	Peak Discharge (cfs)	Total Runoff Volume (ac-ft)
#1	1.500	1.500	4.45	0.23

Structure Detail:

Structure #1 (Culvert)

Primary Road 4P DS1 0+12

Culvert Inputs:

Length (ft)	Slope (%)	Manning's n	Max. Headwater (ft)	Tailwater (ft)	Entrance Loss Coef. (Ke)
40.00	3.00	0.0240	2.50	0.00	0.90

Culvert Results:

Design Discharge = 4.45 cfs

Minimum pipe diameter: 1 - 15 inch pipe(s) required

Subwatershed Hydrology Detail:

Stru #	SWS #	SWS Area (ac)	Time of Conc (hrs)	Musk K (hrs)	Musk X	Curve Number	UHS	Peak Discharge (cfs)	Runoff Volume (ac-ft)
#1	1	1.500	0.026	0.000	0.000	74.000	M	4.45	0.227
	$\sum$	**1.500**						**4.45**	**0.227**

Subwatershed Time of Concentration Details:

Stru #	SWS #	Land Flow Condition	Slope (%)	Vert. Dist. (ft)	Horiz. Dist. (ft)	Velocity (fps)	Time (hrs)
#1	1	8. Large gullies, diversions, and low flowing streams	3.00	15.00	500.00	5.190	0.026
#1	**1**	**Time of Concentration:**					**0.026**

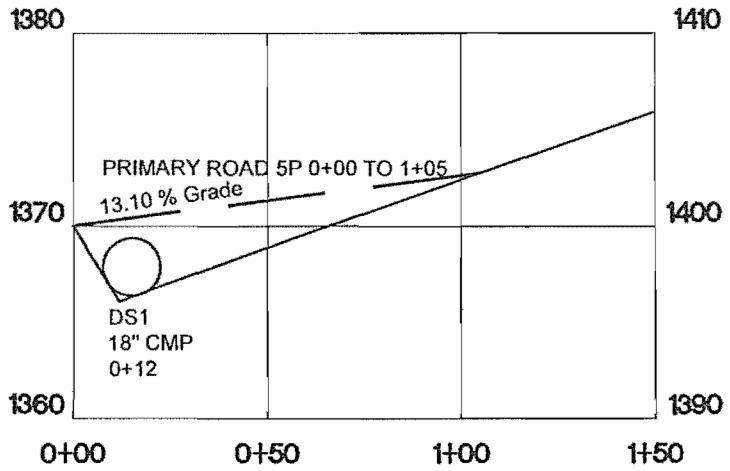

PRIMARY ROAD 5P

EXISTING GRADE

PROPOSED GRADE

NOTE: PROPOSED GRADES SHOWN MAY VARY FROM 0% TO 17%

PERC ENGINEERING CO., INC.

RIDGEHOLM ENERGY PARTNERS, LLC

JOHN POE MINE

P-3981

PRIMARY ROAD PROFILE

DRAWN BY: S.W.L. DWG. NAME: PRIMARY ROADS	DATE: 5/20/2015
APPROVED BY: L.G.S.	SCALE: AS NOTED

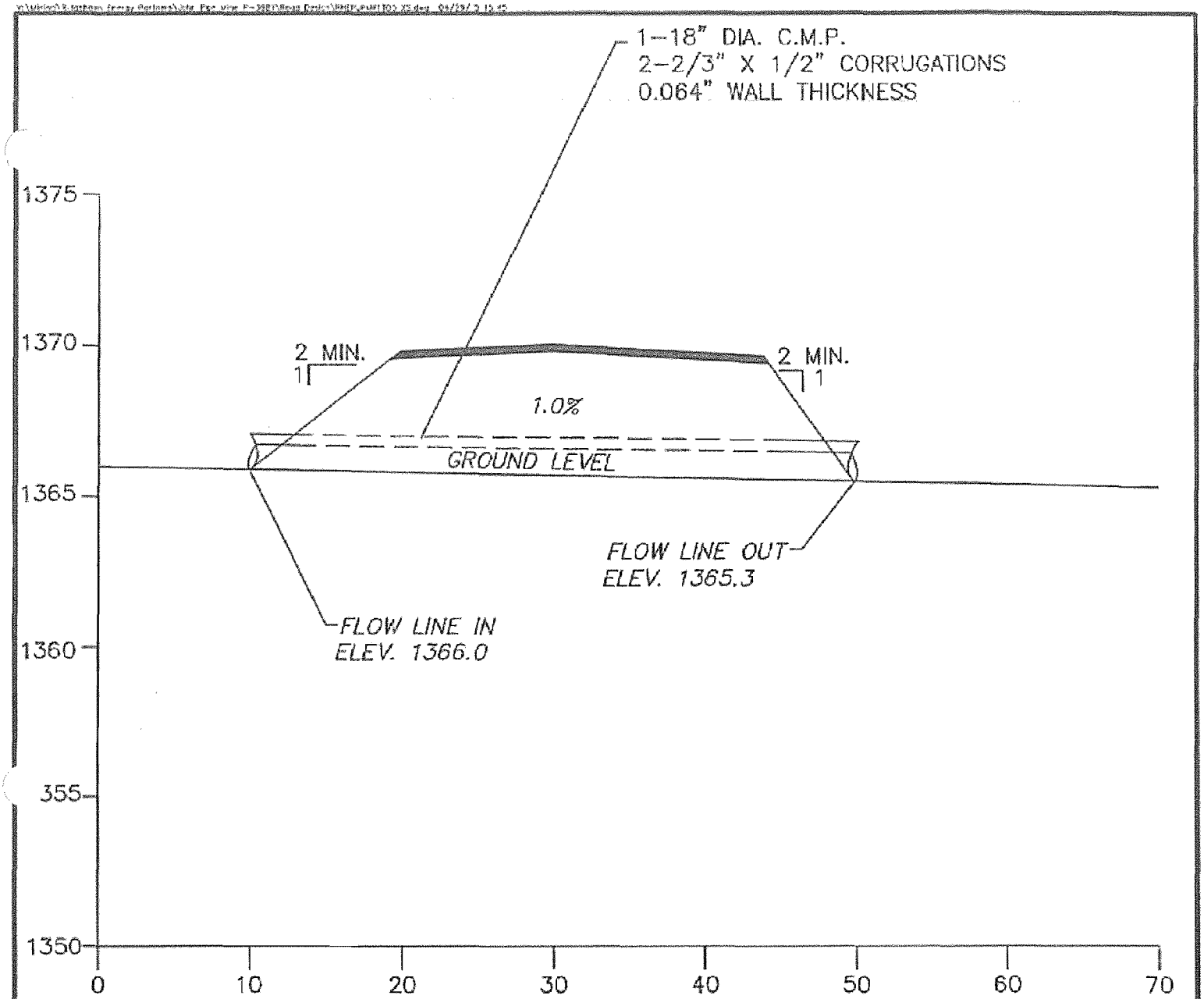

Hydraulics Information

Drainage Area = 2.8 Acres
10 YR.-6 HR., Q = 8.31 C.F.S.
Maximum Water Elev. = 1368.5
Minimum Fill Elev. = 1369.5
Maximum Allowable Cover 18" C.M.P. 166'
Minimum Allowable Cover 18" C.M.P. = 1'
Wall Thickness = 0.064"
Minimum Freeboard = 1'

PERC ENGINEERING CO., INC.

RIDGEHOLM ENERGY PARTNERS LLC
JOHN POE MINE
P-3981
PRIMARY ROAD 5P CROSS SECTION
DS1 0+12

DRAWN BY: S.W.L. DWG. NAME: RHEJPMR1T05 XS	DATE: 4-29-15
APPROVED BY: L.G.S.	SCALE: AS NOTED

Ridgeholm Energy Partners LLC

John Poe Mine

P-3981

Primary Road 5P

Drainage Structure DS1 0+12

4.3 Inches, 10 Year - 6 Hour

SCS 6 Hour Event

LGS

General Information

Storm Information:

Storm Type:	NRCS Type II
Design Storm:	10 yr - 6 hr
Rainfall Depth:	4.300 inches

Structure Networking:

Type	Stru #	(flows into)	Stru #	Musk. K (hrs)	Musk. X	Description
Culvert	#1	==>	End	0.000	0.000	Primary Road SP DS1 0+12

#1
Culvert

Structure Summary:

	Immediate Contributing Area (ac)	Total Contributing Area (ac)	Peak Discharge (cfs)	Total Runoff Volume (ac-ft)
#1	2.800	2.800	8.31	0.42

Structure Detail:

Structure #1 (Culvert)

Primary Road 5P DS1 0+12

Culvert Inputs:

Length (ft)	Slope (%)	Manning's n	Max. Headwater (ft)	Tailwater (ft)	Entrance Loss Coef. (Ke)
40.00	1.00	0.0240	2.50	0.00	0.90

Culvert Results:

Design Discharge = 8.31 cfs

Minimum pipe diameter: 1 - 18 inch pipe(s) required

Subwatershed Hydrology Detail:

Stru #	SWS #	SWS Area (ac)	Time of Conc (hrs)	Musk K (hrs)	Musk X	Curve Number	UHS	Peak Discharge (cfs)	Runoff Volume (ac-ft)
#1	1	2.800	0.092	0.000	0.000	74.000	M	8.31	0.423
	$\sum$	**2.800**						**8.31**	**0.423**

Subwatershed Time of Concentration Details:

Stru #	SWS #	Land Flow Condition	Slope (%)	Vert. Dist. (ft)	Horiz. Dist. (ft)	Velocity (fps)	Time (hrs)
#1	1	8. Large gullies, diversions, and low flowing streams	1.00	10.00	1,000.00	3.000	0.092
#1	**1**	**Time of Concentration:**					**0.092**

Applicant: Ridgeholm Energy Partners, LLC
Mine Name: John Poe Mine
Permit Number: P-3981

PART III - OPERATION PLAN

Section C: Blasting Plan

Ridgeholm Energy Partners, LLC

John Poe Mine

Phillip W Sheted 0345
Alabama Certified Blaster Number 5/08/15

Applicant: Ridgeholm Energy Partners, LLC
Mine Name: John Poe Mine
Permit Number: P-3981

III. C. Blasting Plans

1. Ground vibrations and airblast control

(a) Check which of the following procedures will be used to limit ground vibration.

_X_ Maximum Peak Particle Velocity -to be used within 1000 feet of an occupied dwelling.

Distance from Shot to Site	Maximum Peak Velocity
0 - 300 feet	1.25 Inches/Sec.
301 - 5000 feet	1.00 Inches/Sec.
5001 - Beyond	0.75 Inches/Sec.

All shots must be seismographed.

_X_ Scaled Distance Factor

Distance from Shot to Site	SD Factor
0 - 300 feet	50
301 - 5000 feet	55
5001 - Beyond	65

Seismograph Monitoring is not required.

___ Modified Scale Distance Factor, approval from the Commission is required before this method can be used.

___ Blasting-level chart, approval from the Commission is required before this method can be used.

* Identify the structure used for measuring the scale distance.

Notes:(1) Ridgeholm Energy Partners, LLC, will use the scaled distance factor method to limit ground vibrations caused by blasting operations at their John Poe Mine. If for some reason the maximum peak particle velocity method is to be used, the regulatory authority will be notified and blast monitoring equipment as shown in Part III.-C-3(a) will be used. The regulatory authority will be notified as to the location of all blast monitoring sites. When blast operations are conducted within 1000 feet of an occupied dwelling, Maximum Peak Particle Velocity will be used as identified above, seismographs will be used to monitor the blasts. See the permit map for the location of the occupied dwellings. No blasting will occur within 500 feet or nearer to an occupied dwelling.

(2) No blasting will occur within 500 feet of an occupied dwelling.

Applicant: Ridgeholm Energy Partners, LLC
Mine Name: John Poe Mine
Permit Number: P-3981

(b) Check which of the following maximum levels and corresponding microphone lower frequency limitation will be used.

___ 105 dB peak - c-weighted - slow response *
___ 129 dB peak - 6 Hz or lower
_X_ 133 dB peak - 2 Hz or lower
___ 134 dB peak - 0.1 Hz or lower

Airblast monitoring will be on two consecutive blast starting with the first blast and will be performed on a two month spacing.

2. Describe what variations will be made in the blasting operations to control and correct adverse effects due to blasting.

Variations in burden, spacing, amount of explosives, delays, backfill and stemming will be made as necessary to correct adverse blasting effects. The stemming height and blasting schedule will also be adjusted, if necessary, to help reduce ground vibration.

3. Blast Monitoring.

(a) Describe the blast monitoring equipment to be used (make and model). Will it monitor ground vibrations, air blasts, or both?

NOMIS - 5000	2 Hz	Both
NOMIS - 5000	2 Hz	Both
NOMIS - 5000	2 Hz	Both
VME Model Log I	2 Hz	Both
Berger 1000D	2 Hz	Both

(b) How will monitoring equipment be installed and activated?

Equipment will be installed on a temporary basis for one individual shot or on a semi-permanent basis for 24 hour monitoring. The equipment will be activated by an individual or will be triggered by the ground vibrations or airblasts. Transducers will be buried.

(c) Show the location of blast monitoring stations on the permit map or on a separate map with a scale of 1:24,000 or smaller.

See Attachment III-3-3(c).

* Only with the approval of the Commission.

Applicant: Ridgeholm Energy Partners, LLC
Mine Name: John Poe Mine
Permit Number: P-3981

4. Is blasting proposed to be conducted within 500 feet of an active underground mine? ( ) Yes (X) No

   If yes, concurrence from MSHA is required.

5. Will blasting be conducted within 500 feet of an abandoned underground mine or within 1000 feet of an occupied dwelling, church, school, community or institutional building?
   (XX) Yes ( ) No

   If yes, provide the following information, either as a part of the permit application or at a later date, but before reaching the distance given above. See Attachment III.-C.-5.

   (a) A sketch showing the drill patterns to be used; See Attachment III.-C.-5.
   (b) Critical dimensions, i.e., burden, spacing, stemming, drill hole diameter, etc.; See Attachment III.-C.-5.
   (c) Delay periods; See Attachment III.-C.-5.
   (d) Amount of decking; See Attachment III.-C.-5.
   (e) Type and amount of explosives to be used, including the loading weight (lbs. per foot of drill hole); See Attachment III.-C.-5.
   (f) Location and general description of the structures to be protected; The structures to be protected are those to the southwest and northwest of the permit area (See Permit Map). The structures include mobile homes, wood frame structures and brick veneer structures and concrete block structures.
   (g) Discuss the measures to be used in the blasting operations to protect the public from the adverse effects of blasting; Airblasts will be controlled by maintaining sufficient stemming. Prior to detonation of blasts the blast area will be patrolled, regulated and blocked off by employees to prevent unauthorized entry. Blast warnings will be given prior to each blast and all clear signals will be given after the blast when the blaster in charge determines that to be the case. See Attachment III.-C.-5.-(g)
   (h) The plans are to be prepared and signed by a Certified Blaster. See the sheet preceding the blasting plan.

6. At what times will blasting operations be conducted?

   Blasting will be conducted between sunrise and sunset, Monday through Saturday of each week. This schedule will be valid for the year following its advertisement in a newspaper of local circulation.

7. Will blasting operations be conducted within 300 feet of an occupied dwelling, church, school, community or institutional building?
   ( ) Yes (XX) No

Applicant: Ridgeholm Energy Partners, LLC
Mine Name: John Poe Mine
Permit Number: P-3981

Attachment III.-C.-5.-(g)

Measures to be employed in an effort to protect the public from adverse affects due to blasting will include the following:

Airblasts will be minimized by (1) Covering all surface detonating cords with earthen material to confine their blasts. (2) By maintaining a stemming of a minimum of twelve (12) feet. The stemming material will consist of the cuttings from the borehole. Where the twelve (12) foot minimum can not be maintained, stemming material will be changed to crushed stone ranging in diameter from no less than 1/4 to 1/2 inch, and the Ash Formula (.7 X burden)used as the minimum stemming distance. (3) Burden distance will be maintained as designed to ensure no face blowouts occur causing airblasts. (4) Drill patterns will be drilled accurately ensuring that the proper burden and spacing is maintained. (5) Blasting during times of temperature inversions such as early morning and late afternoon will be limited. (6) Delays will be varied to allow for longer delays between the rows than holes.

Ground vibrations will be minimized by (1) Maintaining the designed blasthole patterns. (2) Limiting the charge weight by the scaled distance factor or through the data obtained from the seismograph. (3) Maintaining the proper delays between rows and blastholes in the rows. (4) The delay sequence will be adjusted as needed to control ground vibrations.

Fly rock from a blast will be minimized by (1) Maintaining the stemming of a blasthole at a minimum of twelve (12) feet. When possible the stemming material will consist of the cuttings from the borehole. Where the twelve (12) foot minimum can not be maintained, stemming material will be changed to crushed stone ranging in diameter from no less than 1/4 to 1/2 inch, and the Ash Formula (.7 X burden)used as the minimum stemming distance. (2) Burden distance will be maintained to the designed amount to prevent face blowout due to the burden distance being to small and to prevent blasthole blowout due to the burden distance being to great. (3) Prior to drilling a blast pattern, the bench will be inspected to determine if any geologic inconsistencies are present which could result in weaker zones which might cause a blowout and flyrock. The drill pattern will be altered as needed to avoid such zones if they are present. (4) The open face, or direction of throw will not face a public road or occupied dwelling. (5) Prior to the charging of a blast pattern, the drill operator will be consulted to determine if any inconsistencies were encountered during the drilling of the blast pattern. If inconsistencies are found, the charging sequence will be varied to stem through these inconsistencies to prevent blowouts. (6) The charge column of the blasthole will be closely monitored to ensure that the amount of blasting agents are not in excess of the allowable design maximum. (7) The delay sequence will be adjusted as needed to control flyrock. (8) Prior to detonation of blasts the blast area will be patrolled, regulated and blocked off by employees to prevent unauthorized entry. Blasts occurring within 1000 feet of a public road will require that traffic on the road be stopped

prior to the blast, a minimum distance of 1000 feet from the blast site, and held during detonation of the blast and until the all clear signal is sounded. Likewise, people occupying houses near a blast pattern will be given verbal warning, in addition to the normal audible warning, well in advance of detonation of a blast and will be asked to vacate to a safe location until the all clear signal is given. Blast warnings will be given prior to each blast and all clear signals will be given after the blast when the blaster in charge determines that to be the case. Each blast will be visibly monitored to determine whether or not flyrock occurred.

Should it become necessary to switch from the scale distance method of compliance to the maximum peak particle velocity method, the scale distance factor 55 shall be used as the departure point for graduated changes in the charge weight to distance ratio as allowed by the ground response (particle velocity of ground vibrations).

Where this relationship is utilized to determine weight charge per delay within 1000 feet of a residence all blasts will be monitored utilizing a seismograph and charge weights will be adjusted based on blast efficiency and ground vibrations to achieve the desired results while remaining within the limitations established by the regulatory authorities.

No blasting will occur within 500 feet or nearer to an occupied dwelling.

Variations in the blasting operations which may be employed to control and correct adverse effects due to blasting will include the following:

Diameter of bore holes: 5 1/2 inch, 6 3/4 inch, 7 3/8 inch, 7 7/8 inch or 9 inch.

Explosive Density in pounds per linear foot:

For a 5 1/2" bore hole the pound per foot will range from 9.0 to 13.0, 6 3/4" bore hole the pound per foot will range from 13.17 to 20.76, for a 7 3/8" bore hole the pound per foot will range from 15.74 to 24.82, for a 7 7/8" bore hole the pound per foot will range from 17.92 to 28.25, for a 9" bore hole the pound per foot will range from 23.40 to 36.40.

The burden for each drill hole will be 2-3 times the bore hole diameter. Spacing will be 1 -1.5 times the burden. The minimum stemming will be according to the Ash Formula of 0.7 times the burden.

Example for a 5 1/2" diameter drill hole the burden will be 13.5 feet to 20 feet, spacing will be 13.5 feet to 20 feet.

Applicant: Ridgeholm Energy Partners, LLC
Mine Name: John Poe Mine
Permit Number: P-3981

Example for a 6 3/4" diameter drill hole the burden will be 13.5 feet to 20 feet, spacing will be 13.5 feet to 30 feet.

Example for a 7 3/8" diameter drill hole the burden will be 14.75 feet to 22 feet, spacing will be 14.75 feet to 33 feet.

Example for a 7 7/8" diameter drill hole the burden will be 15.75 feet to 23 feet, spacing will be 15.75 feet to 34 feet.

Example for a 9" diameter drill hole the burden will be 18 feet to 27 feet, spacing will be 18 feet to 41 feet.