BEST COAL, INC.

ATTACHMENT III-B-5(b)

NARLEY MINE

P-3850

JEFFERSON COUNTY, ALABAMA

BY

PERC ENGINEERING CO., INC.

P.O. BOX 1712

JASPER, ALABAMA 35502

March 8, 2004

MAR 2004
RECEIVED
SURFACE MINING
COMMISSION

PERC
ENGINEERING CO., INC.

Telephone: (205) 384-5553
Facsimile: (205) 295-3114 - Main Building
(205) 295-3115 - Water Lab
Web Address: www.percengineering.com

March 8, 2004

Mr. Gary Heaton, P.E.
Alabama Surface Mining Commission
Post Office Box 2390
Jasper, Alabama 35502-2390

RE: Best Coal, Inc.
Narley Mine
P-3850

Dear Gary:

I hereby certify the attached detailed design plans for Primary Haulroads 1P, 2P, 3P and 4P for the above referenced mine are in accordance with current prudent engineering practices and the Regulations of the Alabama Surface Mining Commission and are true and correct to the best of my knowledge and belief.

If you have any questions or required additional information, please feel free to call.

Sincerely,
PERC Engineering Co., Inc.

ALABAMA REGISTERED NO. 18213 PROFESSIONAL ENGINEER STEVEN R. INGLE

Steven R. Ingle, P.E.
Alabama Registration No. 18213

MAR 2004 REGISTRATION SURFACE MINING COMMISSION

P.O. Box 1712 • Jasper, Alabama 35502 • 1606 Highway 78 West • Jasper, Alabama 35501

Applicant: Best Coal, Inc.
Mine Name: Narley Mine
Permit Number: P-3850

SPECIFICATIONS FOR THE CONSTRUCTION, MAINTENANCE AND RECLAMATION OF PRIMARY ROADS

1. Primary roads shall be designed by or under the direction of a registered professional engineer in accordance with the Alabama Surface Mining Commission rules and regulations and prudent engineering practice.

2. Each roadway embankment will be designed and constructed so as to have a minimum static safety factor of 1.3.

3. To the extent possible, roads will be located on ridges or on the most stable available slopes to prevent or minimize erosion, downstream sedimentation and flooding in an effort to prevent adverse effects to fish, wildlife and related environmental values.

4. To the extent possible, roads will be located above the sediment basins to be constructed for the mining operation in an effort to control or prevent additional contributions of suspended solids to stream flow or runoff outside the permit area and to comply with State and Federal water quality standards applicable to receiving waters and avoid the alteration of the normal flow of water in streambeds or drainage channels while preventing or controlling damage to public or private property. Where it is not possible or is impractical to locate roads in this manner, sediment control devices such as silt fencing, hay bale check dams and rock filter check dams will be used as necessary to maintain water quality. No fording of intermittent or perennial streams will be conducted unless specifically approved by the Alabama Surface Mining Commission as temporary routes to be used during road construction.

5. Prior to construction, the roadway will be cleared, grubbed and will have the topsoil removed. The clearing limits will be kept to the minimum necessary to accommodate the roadbed and associated ditch construction.

6. Roads will be constructed of suitable compacted subgrade material and will have a minimum width of ten feet and a maximum width necessary to accommodate the largest equipment traveling the road.

7. Roadbeds will be cut to consolidated non-erodible material or will be surfaced with durable non-toxic, non-acid forming substances. The wearing surface will consist of durable sandstone, chert, crushed limestone, crushed concrete, crushed asphalt, red rock, ironore refuse, gravel, or other durable non-toxic, non-acid forming material approved by the Regulatory Authority. The wearing surface will be placed on the roadbed to a depth of four inches.

8. No sustained grades will exceed ten percent unless deemed necessary, in which case appropriate sediment control facilities will be constructed. If grades in excess of fifteen percent are required, cross drains, ditch relief drains and road drainways will be located at a minimum distance of three-hundred feet.

9. Roads will be constructed so as to have adequate drainage utilizing ditches, culverts, cross drains and ditch relief drains designed to safely pass the peak runoff from a ten year, six hour precipitation event. Drainage pipes and culverts shall be installed as designed and will be maintained in a free and operating condition to prevent and control erosion at inlets and outlets. Culverts have been designed to support the load of the heaviest equipment to travel the road and are based on the Handbook of Steel Drainage and Highway Construction Products by the American Iron and Steel Institute and the equipment specifications. Drainage ditches will be constructed and maintained in accordance with the approved design to prevent uncontrolled drainage over the road surface and embankment. Roads will not be located in the channel of an intermittent or perennial stream unless specifically approved by the Alabama Surface Mining Commission. Additionally, no relocation and/or alteration of an intermittent or perennial stream will be done unless specifically approved by the Alabama Surface Mining Commission. In the event that it becomes evident that any drainage structures including culverts, bridges and/or low water crossings will be required in order to cross an intermittent or perennial stream, the structure will be designed and constructed in accordance with Alabama Surface Mining Commission requirements and prudent engineering practice and the approval of the design(s) will be acquired prior to the commencement of construction. Hay bale check dams and silt fences will be used at strategic locations when necessary to control sediment runoff. Immediately upon completion of construction, the side slopes of the road embankments and/or cuts will be fertilized, seeded with annual and perennial grasses and mulch will be added to aid in the prevention of erosion and to enhance seed germination. The seed mix will consist of, but is not limited to, some combination of the following species: bermuda grass, fescue, lespedeza, rye grass, brown top millet, clover and vetch. The particular species to be planted will vary with the planting season at the time of seed application. Upon completion of construction of each phase of the roadway the construction will be certified to the Alabama Surface Mining Commission as having been done in accordance with the approved plans for the roadway and associated facilities.

10. Routine maintenance will be required to assure that the road continually meets performance standards and will consist of periodic grading, resurfacing, dust suppression and maintenance of sediment control facilities. Dust suppression will consist of the application of water, chemical binders and/or other dust suppressants. No oil will be utilized in this process. Spot seeding, fertilizing and mulching will be performed as necessary to improve vegetative cover on roadway slopes. A road damaged by a catastrophic event shall be repaired as soon as practicable after the damage has occurred.

11. Roads not to be retained as part of the post mine land use shall be reclaimed in accordance with the approved reclamation plan for this permit as soon as practicable after they are no longer needed as part of the mining and reclamation operation, using the following procedures:

    a. The road will be closed to traffic.

    b. All bridges, culverts and other drainage structures not approved as part of the post mine land use will be removed.

    c. All road surfacing materials that are not compatible with the post mine land use or revegetation requirements will be properly disposed of on-site or removed from the site for re-use.

    d. Roadway cut and fill slopes shall be regraded and reshaped to be compatible with the post mine land use and to compliment the natural drainage pattern of the surrounding terrain.

    e. The natural drainage patterns shall be protected from surface runoff and erosion utilizing the installation of dikes and/or cross drains as necessary.

    f. The roadbed shall be ripped or scarified as necessary, the topsoil or substitute or approved growing medium shall be replaced and revegetated in accordance with the approved reclamation plan for this permit.

12. The drawings and data contained in the specific design plans illustrate typical roadbed configurations for primary roads as well as site specific design of drainage structures, stability analysis and ditch sections.

Applicant: Best Coal, Inc.
Mine Name: Narley Mine
Permit Number: P-3850

SPECIFICATIONS FOR THE CONSTRUCTION, MAINTENANCE AND RECLAMATION OF PRIMARY ROADS

1. Primary roads shall be designed by or under the direction of a registered professional engineer in accordance with the Alabama Surface Mining Commission rules and regulations and prudent engineering practice.

2. Each roadway embankment will be designed and constructed so as to have a minimum static safety factor of 1.3.

3. To the extent possible, roads will be located on ridges or on the most stable available slopes to prevent or minimize erosion, downstream sedimentation and flooding in an effort to prevent adverse effects to fish, wildlife and related environmental values.

4. To the extent possible, roads will be located above the sediment basins to be constructed for the mining operation in an effort to control or prevent additional contributions of suspended solids to stream flow or runoff outside the permit area and to comply with State and Federal water quality standards applicable to receiving waters and avoid the alteration of the normal flow of water in streambeds or drainage channels while preventing or controlling damage to public or private property. Where it is not possible or is impractical to locate roads in this manner, sediment control devices such as silt fencing, hay bale check dams and rock filter check dams will be used as necessary to maintain water quality. No fording of intermittent or perennial streams will be conducted unless specifically approved by the Alabama Surface Mining Commission as temporary routes to be used during road construction.

5. Prior to construction, the roadway will be cleared, grubbed and will have the topsoil removed. The clearing limits will be kept to the minimum necessary to accommodate the roadbed and associated ditch construction.

6. Roads will be constructed of suitable compacted subgrade material and will have a minimum width of ten feet and a maximum width necessary to accommodate the largest equipment traveling the road.

7. Roadbeds will be cut to consolidated non-erodible material or will be surfaced with durable non-toxic, non-acid forming substances. The wearing surface will consist of durable sandstone, chert, crushed limestone, crushed concrete, crushed asphalt, red rock, ironore refuse, gravel, or other durable non-toxic, non-acid forming material approved by the Regulatory Authority. The wearing surface will be placed on the roadbed to a depth of four inches.

8. No sustained grades will exceed ten percent unless deemed necessary, in which case appropriate sediment control facilities will be constructed. If grades in excess of fifteen percent are required, cross drains, ditch relief drains and road drainways will be located at a minimum distance of three-hundred feet.

9. Roads will be constructed so as to have adequate drainage utilizing ditches, culverts, cross drains and ditch relief drains designed to safely pass the peak runoff from a ten year, six hour precipitation event. Drainage pipes and culverts shall be installed as designed and will be maintained in a free and operating condition to prevent and control erosion at inlets and outlets. Culverts have been designed to support the load of the heaviest equipment to travel the road and are based on the Handbook of Steel Drainage and Highway Construction Products by the American Iron and Steel Institute and the equipment specifications. Drainage ditches will be constructed and maintained in accordance with the approved design to prevent uncontrolled drainage over the road surface and embankment. Roads will not be located in the channel of an intermittent or perennial stream unless specifically approved by the Alabama Surface Mining Commission. Additionally, no relocation and/or alteration of an intermittent or perennial stream will be done unless specifically approved by the Alabama Surface Mining Commission. In the event that it becomes evident that any drainage structures including culverts, bridges and/or low water crossings will be required in order to cross an intermittent or perennial stream, the structure will be designed and constructed in accordance with Alabama Surface Mining Commission requirements and prudent engineering practice and the approval of the design(s) will be acquired prior to the commencement of construction. Hay bale check dams and silt fences will be used at strategic locations when necessary to control sediment runoff. Immediately upon completion of construction, the side slopes of the road embankments and/or cuts will be fertilized, seeded with annual and perennial grasses and mulch will be added to aid in the prevention of erosion and to enhance seed germination. The seed mix will consist of, but is not limited to, some combination of the following species: bermuda grass, fescue, lespedeza, rye grass, brown top millet, clover and vetch. The particular species to be planted will vary with the planting season at the time of seed application. Upon completion of construction of each phase of the roadway the construction will be certified to the Alabama Surface Mining Commission as having been done in accordance with the approved plans for the roadway and associated facilities.

10. Routine maintenance will be required to assure that the road continually meets performance standards and will consist of periodic grading, resurfacing, dust suppression and maintenance of sediment control facilities. Dust suppression will consist of the application of water, chemical binders and/or other dust suppressants. No oil will be utilized in this process. Spot seeding, fertilizing and mulching will be performed as necessary to improve vegetative cover on roadway slopes. A road damaged by a catastrophic event shall be repaired as soon as practicable after the damage has occurred.

11. Roads not to be retained as part of the post mine land use shall be reclaimed in accordance with the approved reclamation plan for this permit as soon as practicable after they are no longer needed as part of the mining and reclamation operation, using the following procedures:

    a. The road will be closed to traffic.

    b. All bridges, culverts and other drainage structures not approved as part of the post mine land use will be removed.

    c. All road surfacing materials that are not compatible with the post mine land use or revegetation requirements will be properly disposed of on-site or removed from the site for re-use.

    d. Roadway cut and fill slopes shall be regraded and reshaped to be compatible with the post mine land use and to compliment the natural drainage pattern of the surrounding terrain.

    e. The natural drainage patterns shall be protected from surface runoff and erosion utilizing the installation of dikes and/or cross drains as necessary.

    f. The roadbed shall be ripped or scarified as necessary, the topsoil or substitute or approved growing medium shall be replaced and revegetated in accordance with the approved reclamation plan for this permit.

12. The drawings and data contained in the specific design plans illustrate typical roadbed configurations for primary roads as well as site specific design of drainage structures, stability analysis and ditch sections.

TYPICAL HAUL ROAD
FILL SECTION

NO SCALE

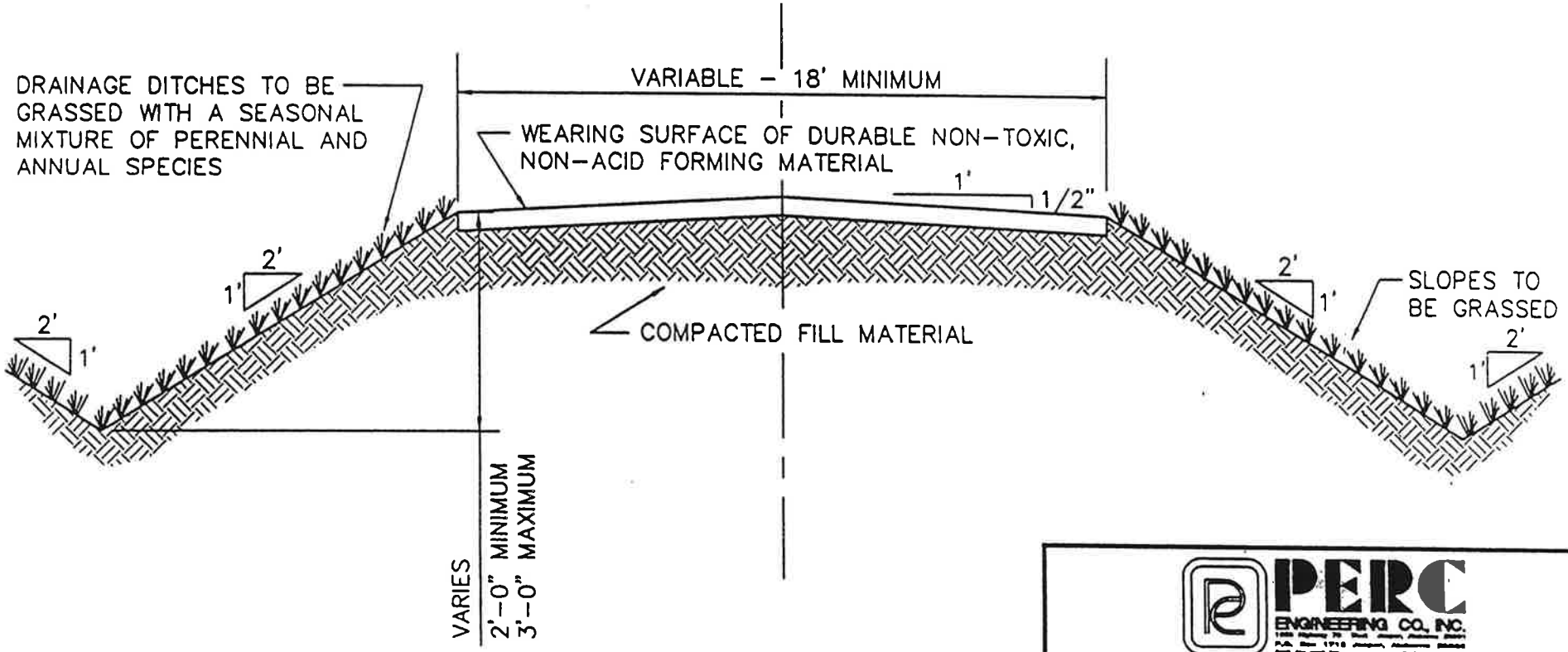

PERC ENGINEERING CO., INC.

TYPICAL FILL SECTION
PRIMARY HAUL ROAD

DRAWN BY: K.D.P. DWG. NAME: TYPHAULF	DATE: 2-3-97
APPROVED BY: S.R.I.	SCALE: NONE

ATTACHMENT III.-B.-5.

TYPICAL HAUL ROAD
CUT SECTION

NO SCALE

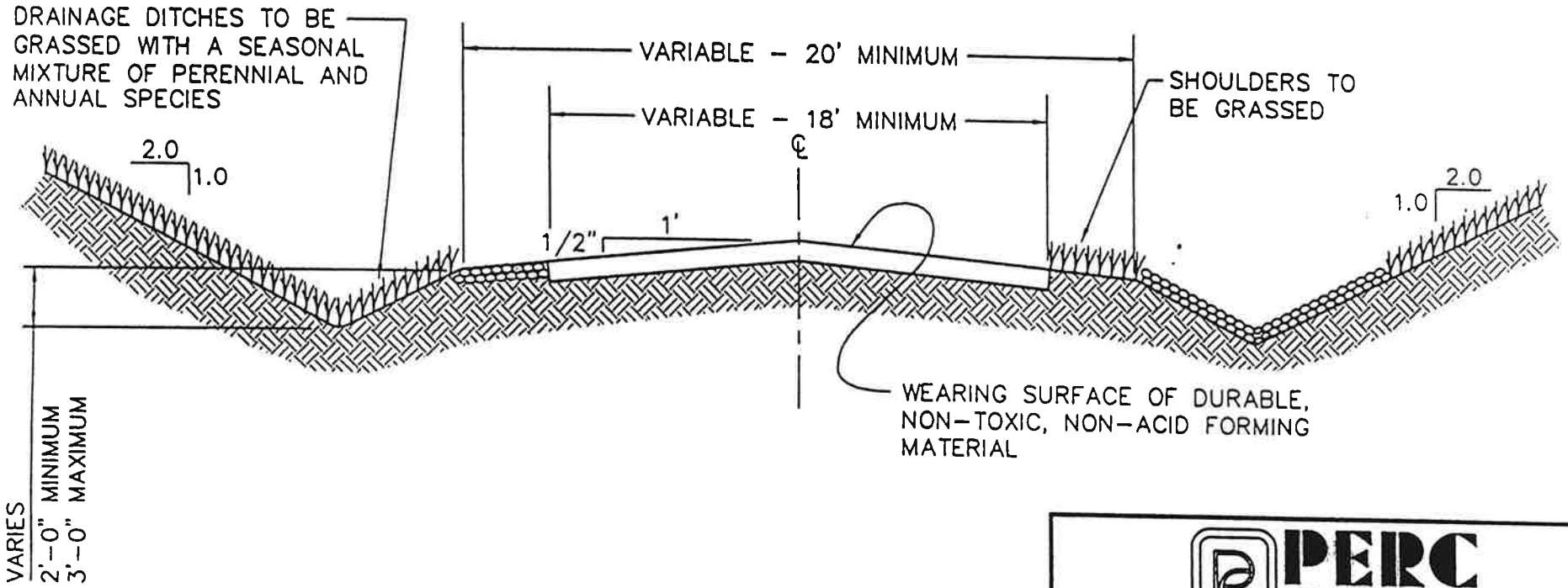

PERC ENGINEERING CO., INC.

TYPICAL CUT SECTION
PRIMARY HAUL ROAD

DRAWN BY:	K.D.P.	DATE:	2–3–97
DWG. NAME:	TYPHAULC		
APPROVED BY:	S.R.I.	SCALE:	NONE

ATTACHMENT III.–B.–5.

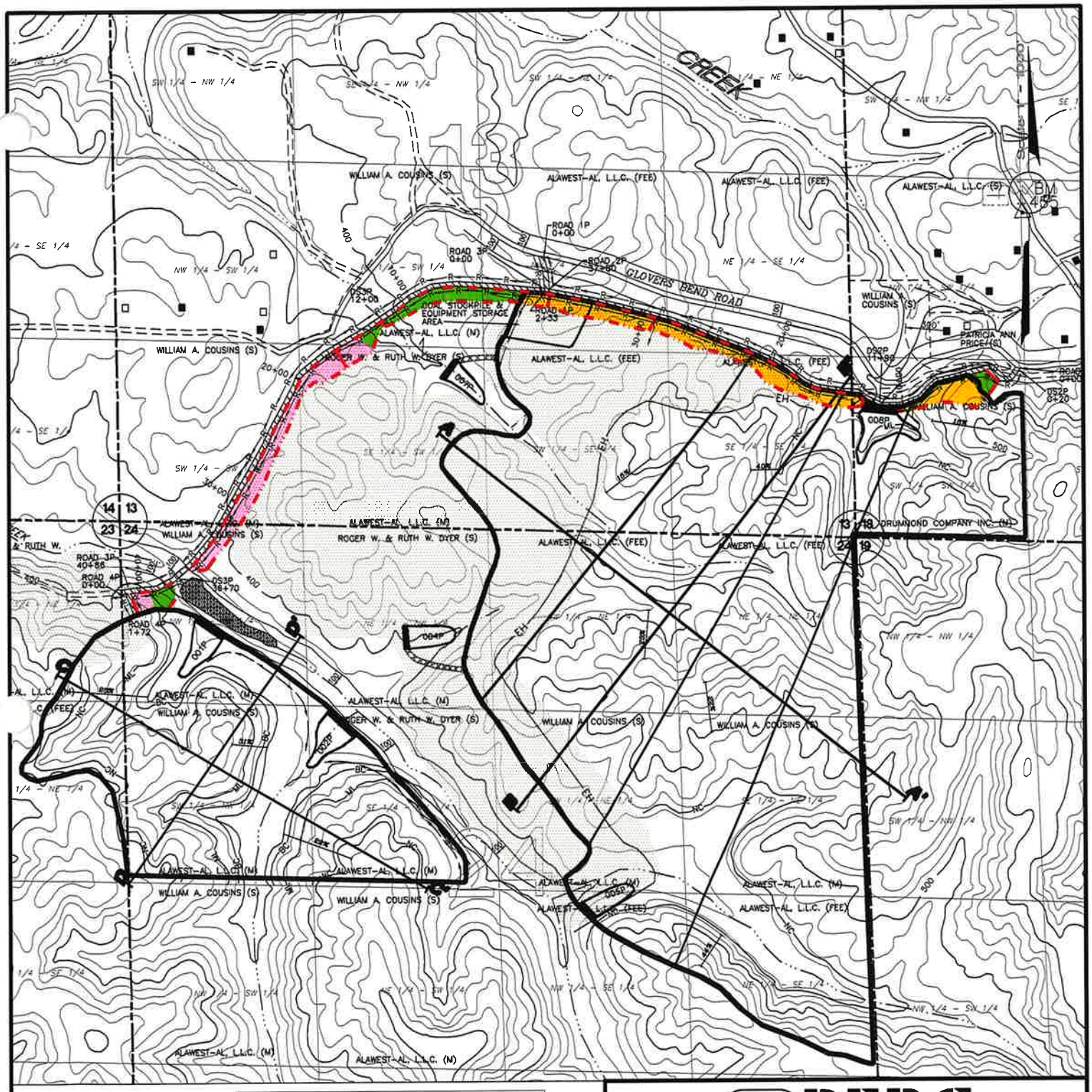

LEGEND

- Permit Boundary
- Previously Surface Mined by Others
- Private Impoundment
- 600 Surface Contour
- 001 Sediment Basin
- Drainage Divide
- Natural Drainage Course
- R Road Side Ditch
- Primary Road
- Ancillary Road
- County Road (Paved unless otherwise designated)
- Road (Private unless otherwise shown)
- Drainage Structure
- DS2P 0+20

LANDUSE AND CURVE NUMBER INFORMATION

- GRADED & BARE, CURVE NUMBER 81
- UNMANAGED TIMBERLAND, CURVE NUMBER 70
- PREVIOUSLY DISTURBED, NATURALLY REVEGETATED, CURVE NUMBER 68

PERC ENGINEERING CO., INC.
1808 Highway 78 West Jasper, Alabama 35501
P.O. Box 1712 Jasper, Alabama 35502
(205) 384-3553 Office (205) 384-6491 Fax

Attachment III.-B.-5.(b)
Haulroad Ditch Watershed Map
Best Coal, Inc.
Narley Mine
P-3850

DRAWN BY: P.T.O. DWG. NAME: BCNMHDWS	DATE: 3-5-04
APPROVED BY: S.E.W.	SCALE: 1"=1000'

Best Coal, Inc.

Narley Mine

P-3850

Primary Road Ditches

4.3 Inches, 10 Year - 6 Hour, SCS 6 Hour

SRI

General Information

Storm Information:

Storm Type:	Rainfall Event

Accumulated Time (hrs)	Accumulated Depth (in)
0.00	0.0000
0.50	0.1510
1.00	0.3440
1.50	0.5810
2.00	0.9890
2.50	2.5800
3.00	3.0100
3.50	3.3540
4.00	3.5910
4.50	3.8060
5.00	3.9780
5.50	4.1500
6.00	4.3000

Peak 30-minute Intensity: 3.182 in/hr

Structure Networking:

Type	Stru #	(flows into)	Stru #	Musk. K (hrs)	Musk. X	Description
Null	#1	==>	End	0.000	0.000	Primary Road Ditches

#1
Null

Structure Summary:

	Immediate Contributing Area (ac)	Total Contributing Area (ac)	Peak Discharge (cfs)	Total Runoff Volume (ac-ft)
#1	4.000	4.000	5.59	0.47

Subwatershed Hydrology Detail:

Stru #	SWS #	SWS Area (ac)	Time of Conc (hrs)	Musk K (hrs)	Musk X	Curve Number	UHS	Peak Discharge (cfs)	Runoff Volume (ac-ft)
#1	1	4.000	0.115	0.000	0.000	68.000	M	5.59	0.466
	Σ	**4.000**						**5.59**	**0.466**

Road Ditch 1-5%

Material: Grass mixture

Triangular Channel

Left Sideslope Ratio	Right Sideslope Ratio	Slope (%)	Retardance Classes	Freeboard Depth (ft)	Freeboard % of Depth	Freeboard Mult. x (VxD)	Limiting Velocity (fps)
2.0:1	2.0:1	5.0	D, B	0.50			5.0

	Stability Class D w/o Freeboard	Stability Class D w/ Freeboard	Capacity Class B w/o Freeboard	Capacity Class B w/ Freeboard
Design Discharge:	5.60 cfs		5.60 cfs	
Depth:	0.90 ft	1.40 ft	1.36 ft	1.86 ft
Top Width:	3.61 ft	5.61 ft	5.44 ft	7.44 ft
Velocity:	3.44 fps		1.51 fps	
X-Section Area:	1.63 sq ft		3.70 sq ft	
Hydraulic Radius:	0.403		0.608	
Froude Number:	0.90		0.32	
Roughness Coefficient:	0.0527		0.1579	

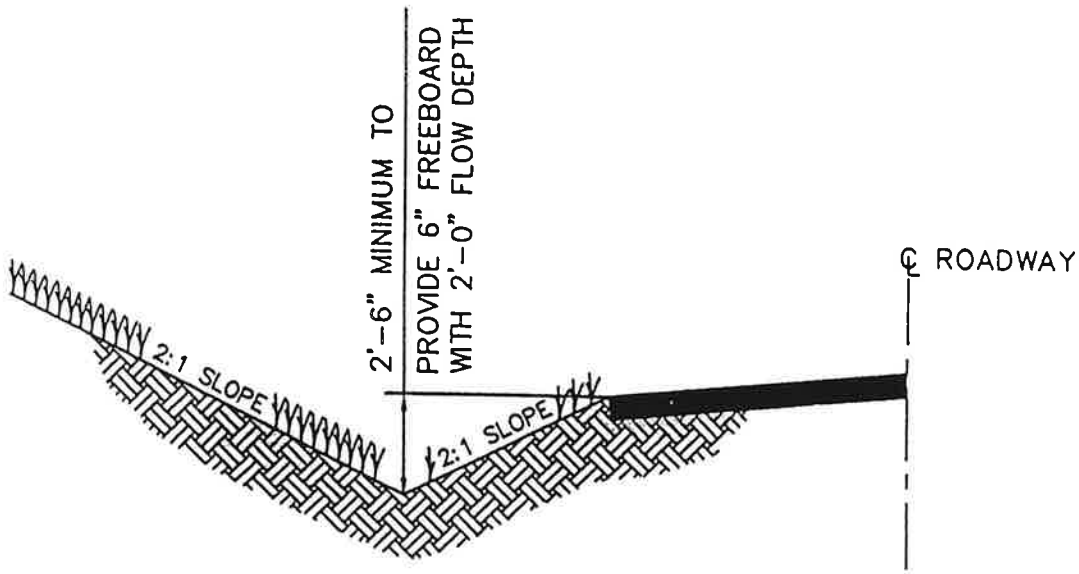

MINIMUM DITCH GRADIENT = 1%

MAXIMUM DITCH GRADIENT = 5%

DITCH CHANNEL TO BE VEGETATED WITH A MIXTURE OF BERMUDA GRASS, FESCUE, AND LESPEDEZA TO CONFORM TO CLASS "D" RETARDANT CLASS.

PERC ENGINEERING CO., INC.

TYPICAL PRIMARY ROADWAY DITCH CROSS SECTION

DRAWN BY: K.D.P. DWG. NAME: PRIMROAD	DATE: 2-4-97
APPROVED BY: R.E.P.	SCALE: NONE

Best Coal, Inc., Narley Mine P-3850, Primary Road Ditch 6-10%

Material: Riprap

Triangular Channel

Left Sideslope Ratio	Right Sideslope Ratio	Slope (%)	Freeboard Depth (ft)	Freeboard % of Depth	Freeboard Mult. x (VxD)
2.0:1	2.0:1	10.0	0.50		

Simons/OSM Method - Steep Slope Design

	w/o Freeboard	w/ Freeboard
Design Discharge:	5.60 cfs	
Depth:	0.24 ft	0.74 ft
Top Width:	0.97 ft	2.97 ft
Velocity*:		
X-Section Area:	0.12 sq ft	
Hydraulic Radius:	0.108	
Froude Number*:		
Manning's n*:		
Dmin:	5.00 in	
D50:	15.00 in	
Dmax:	18.75 in	

Velocity and Manning's n calculations may not apply for this method.

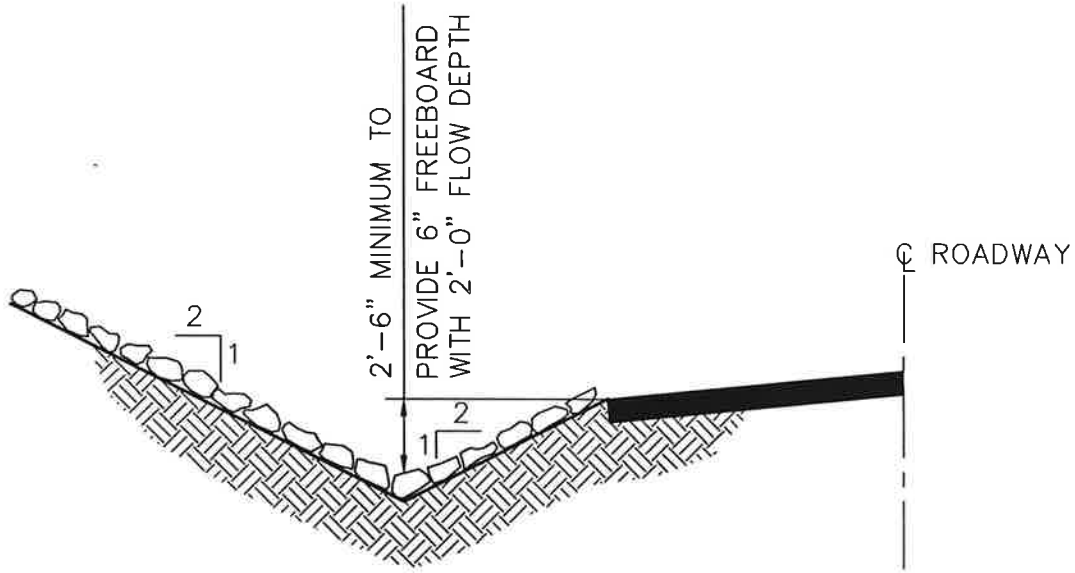

DITCH GRADIENT 6% TO 10%

DITCH CHANNEL TO BE LINED WITH NON-ERODIBLE NON-TOXIC, NON-ACID FORMING SANDSTONE OR LIMESTONE RIP-RAP. THE RIP-RAP WILL BE "CLASS 3" RIP-RAP AND HAVE A MINIMUM THICKNESS OF 19".

PERC ENGINEERING CO., INC.
1806 Highway 78 West Jasper, Alabama 35501
P.O. Box 1712 Jasper, Alabama 35502
(205) 384-2553 Office (205) 384-9491 Fax

TYPICAL PRIMARY ROADWAY DITCH CROSS SECTION

DRAWN BY:	P.T.O.	DATE:	3-8-04
DWG. NAME:	BCNMPRTY		
APPROVED BY:	S.E.W.	SCALE:	NONE

D:\PROJSS\W\BCNMPRTY.dwg 03/08/04 08:00

Best Coal, Inc., Narley Mine P-3850, Primary Road Ditch 11-17%

Material: Riprap

Triangular Channel

Left Sideslope Ratio	Right Sideslope Ratio	Slope (%)	Freeboard Depth (ft)	Freeboard % of Depth	Freeboard Mult. x (VxD)
2.0:1	2.0:1	17.0	0.50		

Simons/OSM Method - Steep Slope Design

	w/o Freeboard	w/ Freeboard
Design Discharge:	5.60 cfs	
Depth:	0.17 ft	0.67 ft
Top Width:	0.69 ft	2.69 ft
Velocity*:		
X-Section Area:	0.06 sq ft	
Hydraulic Radius:	0.077	
Froude Number*:		
Manning's n*:		
Dmin:	6.00 in	
D50:	18.00 in	
Dmax:	22.50 in	

Velocity and Manning's n calculations may not apply for this method.

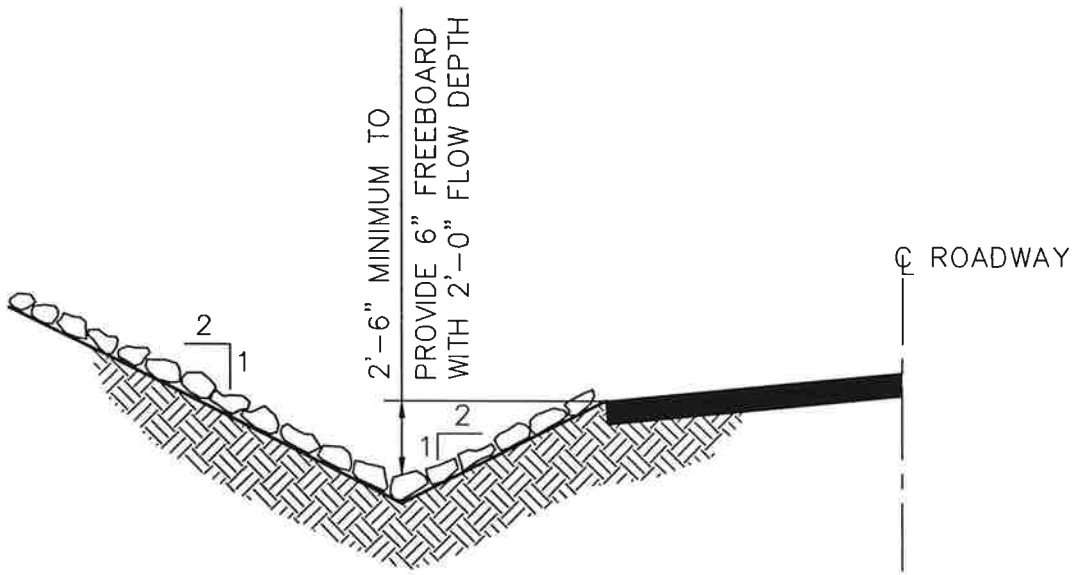

DITCH GRADIENT 11% TO 17%

DITCH CHANNEL TO BE LINED WITH NON-ERODIBLE NON-TOXIC, NON-ACID FORMING SANDSTONE OR LIMESTONE RIP-RAP. THE RIP-RAP WILL BE "CLASS 3" RIP-RAP AND HAVE A MINIMUM THICKNESS OF 22".

PERC ENGINEERING CO., INC.
1808 Highway 78 West Jasper, Alabama 35501
P.O. Box 1712 Jasper, Alabama 35502
(205) 384-2553 Office (205) 384-9481 Fax

TYPICAL PRIMARY ROADWAY DITCH CROSS SECTION

DRAWN BY:	P.T.O.	DATE:	3-8-04
DWG. NAME:	BCNMPRTY		
APPROVED BY:	S.E.W.	SCALE:	NONE

D:\PTO\SEW\BCNMPRTY.dwg 03/08/04 08:00

Best Coal, Inc.
Narley Mine
P-3850

RIP-RAP CLASSIFICATION SPECIFICATIONS

CLASS 1 RIP-RAP

No more than 10% of the stone will have a diameter greater than twelve (12) inches; no more than 50% of the stone will have a diameter less than ten (10) inches; and no more than 10% of the stone will have a diameter of less than six (6) inches. The thickness of the rip-rap liner will be no less than twelve (12) inches.

CLASS 2 RIP-RAP

No more than 10% of the stone will have a diameter greater than sixteen (16) inches; no more than 50% of the stone will have a diameter less than twelve (12) inches; and no more than 10% of the stone will have a diameter of less than six (6) inches. The thickness of the rip-rap liner will be no less than sixteen (16) inches.

CLASS 3 RIP-RAP

No more than 10% of the stone will have a diameter greater than twenty two (22) inches; no more than 50% of the stone will have a diameter less than sixteen (16) inches; and no more than 10% of the stone will have a diameter of less than eight (8) inches. The thickness of the rip-rap liner will be no less than twenty two (22) inches.

CLASS 4 RIP-RAP

No more than 10% of the stone will have a diameter greater than twenty seven (27) inches; no more than 50% of the stone will have a diameter less than twenty two (22) inches; and no more than 10% of the stone will have a diameter of less than ten (10) inches. The thickness of the rip-rap liner will be no less than twenty seven (27) inches.

CLASS 5 RIP-RAP

No more than 10% of the stone will have a diameter greater than thirty four (34) inches; no more than 50% of the stone will have a diameter less than twenty seven (27) inches; and no more than 10% of the stone will have a diameter of less than sixteen (16) inches. The thickness of the rip-rap liner will be no less than thirty four (34) inches.

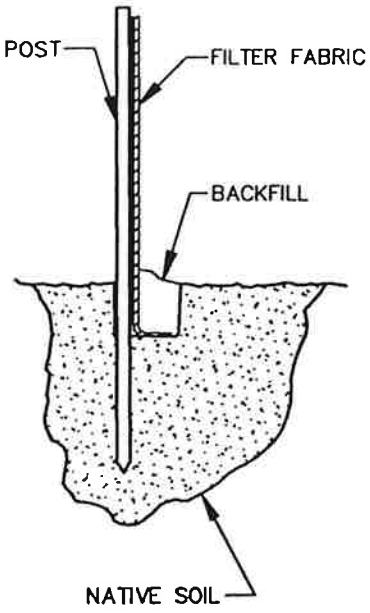

TOE–IN METHOD

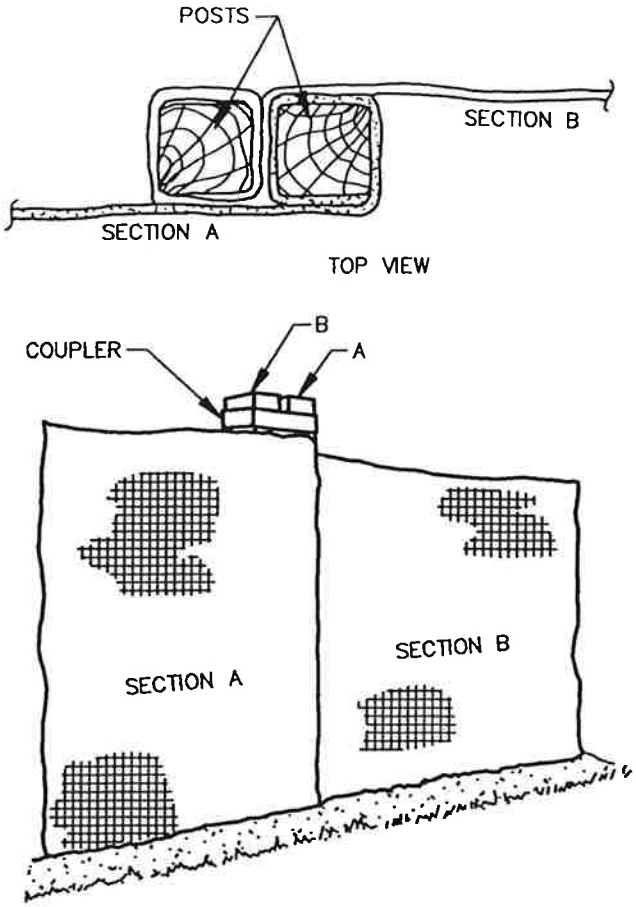

JOINING SECTIONS OF SILT FENCE

CONSTRUCTION SPECIFICATIONS

1.) SILT FENCING WILL BE PLACED IN A ROW WITH ENDS TIGHTLY FITTING THE ADJACENT FENCE SECTION.
2.) EACH SECTION OF FENCING WILL BE EMBEDDED IN THE SOIL A MINIMUM OF 6".
3.) FENCING WILL BE SECURELY ANCHORED IN PLACE BY STAKES AT A SPACING NOT TO EXCEED 7'–7"'.
4.) INSPECTION WILL BE FREQUENT AND REPAIR OR REPLACEMENT SHALL BE MADE PROMPTLY AS NEEDED.

PERC
ENGINEERING CO., INC.

SILT FENCE TYPICAL

DRAWN BY:	M.R.B.	DATE:	APRIL 18, 1994
DWG. NAME:	EASTSILT		
APPROVED BY:	R.A.W.	SCALE:	NONE

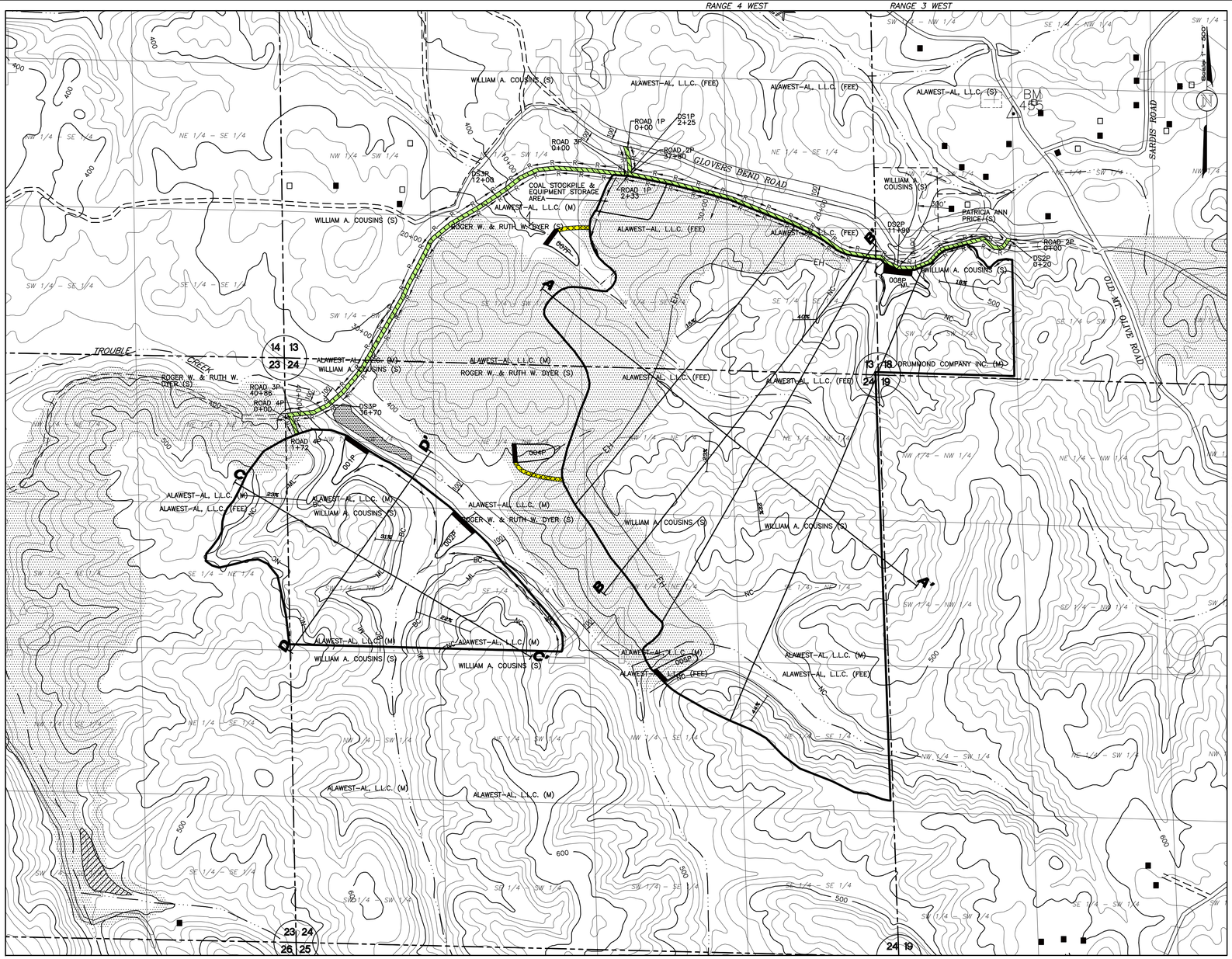

PERMIT AREA

Scale: 1"= 500'
Contour Interval = 20'

Base map – Brookside Alabama
United States Geological Survey
7.5 Minute Quadrangle Map.

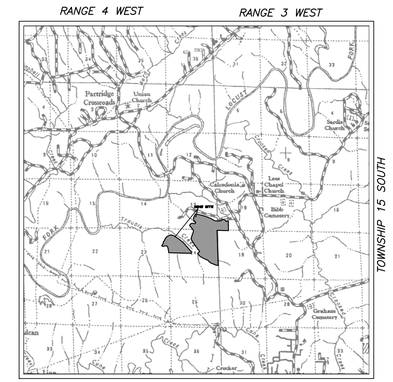

VICINITY MAP

Scale: 1"= 1 Mile

LEGEND

- Permit Boundary
- Previously Surface Mined by Others
- Private Impoundment
- A — A' Reclamation Cross-Section
- 600 Surface Contour
- 001 Sediment Basin
- Drainage Divide
- Natural Drainage Course
- 10% Land Slope Measurement
- Property Line other than Forty Line
- M Mineral Ownership Line other than Forty Line
- R Road Side Ditch
- Occupied Dwelling
- Unoccupied Dwelling (Barn, Shed, etc..)
- Primary Road
- Ancillary Road
- County Road (Paved unless otherwise designated)
- Road (Private unless otherwise shown)
- (M) Indicates Mineral Ownership
- (S) Indicates Surface Ownership
- Monitoring Well
- Landhook, conveys Surface Ownership Only.
- Cemetery
- NC New Castle Outcrop
- ML Mary Lee Outcrop
- BC Blue Creek Outcrop

PERC ENGINEERING CO., INC.
1606 Hwy. 78 West Jasper, AL 35501/P.O. Box 1712-35502
(205) 384-5553 Office (205) 384-9491 Fax

REVISIONS

NO.	DATE	NATURE OF REVISION
1		
2		
3		
4		
5		
6		

Initial Map Date: December 12, 2003

BCNMHRL.DWG

HAULROAD LOCATION MAP
ATTACHMENT III - B - 5

BEST COAL, INC.
NARLEY MINE

Part of Sections 13, 23 & 24
Township 15 South, Range 4 West
Section 18, Township 15 South, Range 3 West
Jefferson County, Alabama

NOTES

1) Due to the fill at Drainage Structure DS3P 36+70 being the most adverse fill section at the Narley Mine, a stability analysis was performed to prove its safety.

2) Due to the road ditch south of Road 3P having the largest drainage area, all road ditches were designed using it as the worst case scenario.

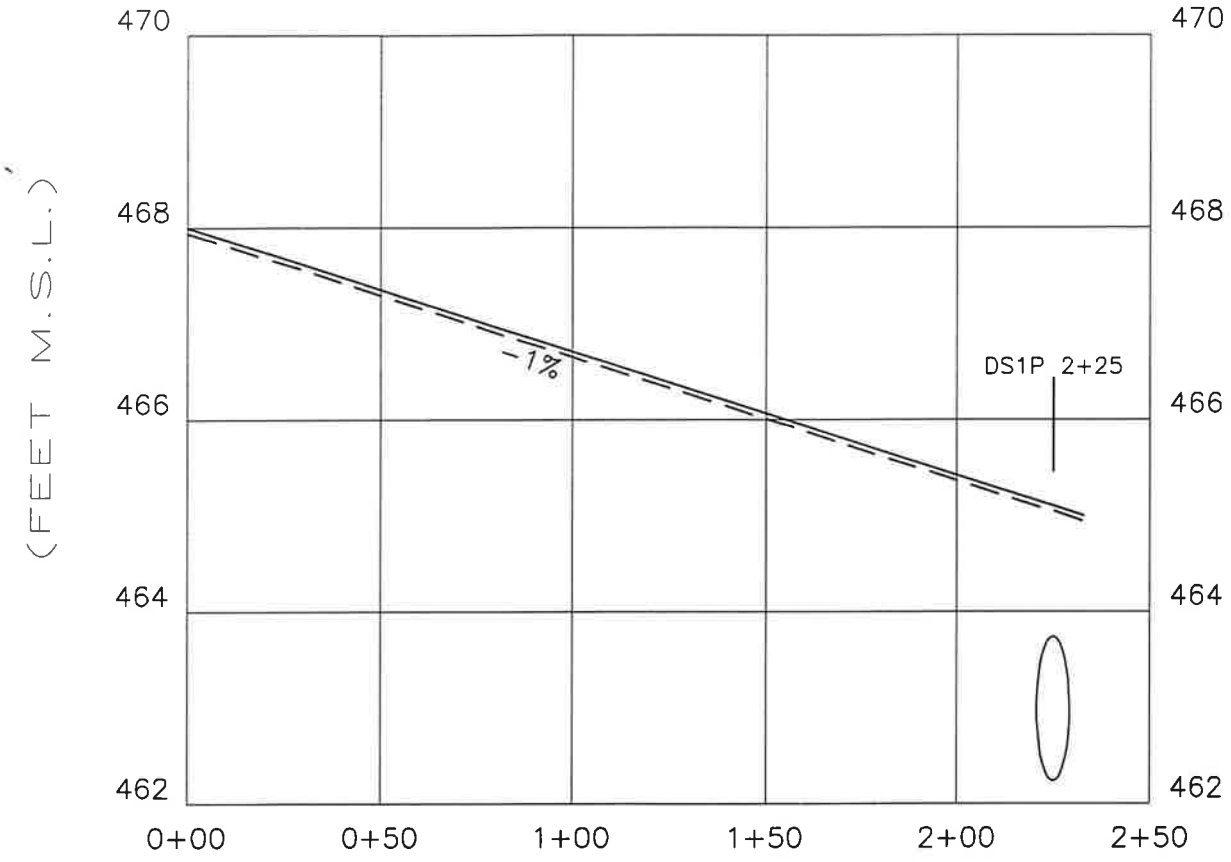

ROAD 1P

SCALE: 1" = 50' HORIZONTAL
1" = 2' VERTICAL

EXISTING GRADE

PROPOSED FINISH GRADE

NOTES:

1. FINISH GRADES SHOWN HEREON MAY VARY FROM BETWEEN 0% AND 17%.
2. SEE INDIVIDUAL CROSS SECTION SHEETS FOR SPECIFIC DRAINAGE STRUCTURE INFORMATION.

PERC ENGINEERING CO., INC.
1606 Highway 78 West Jasper, Alabama 35501
P.O. Box 1712 Jasper, Alabama 35502
(205) 384-5583 Office (205) 384-9481 Fax

BEST COAL, INC.
NARLEY MINE
P-3850
HAUL ROAD PROFILE

DRAWN BY:	S.A.E.	DATE:	2-25-04
DWG. NAME:	BCNMHRP4		
APPROVED BY:	S.E.W.	SCALE:	AS NOTED

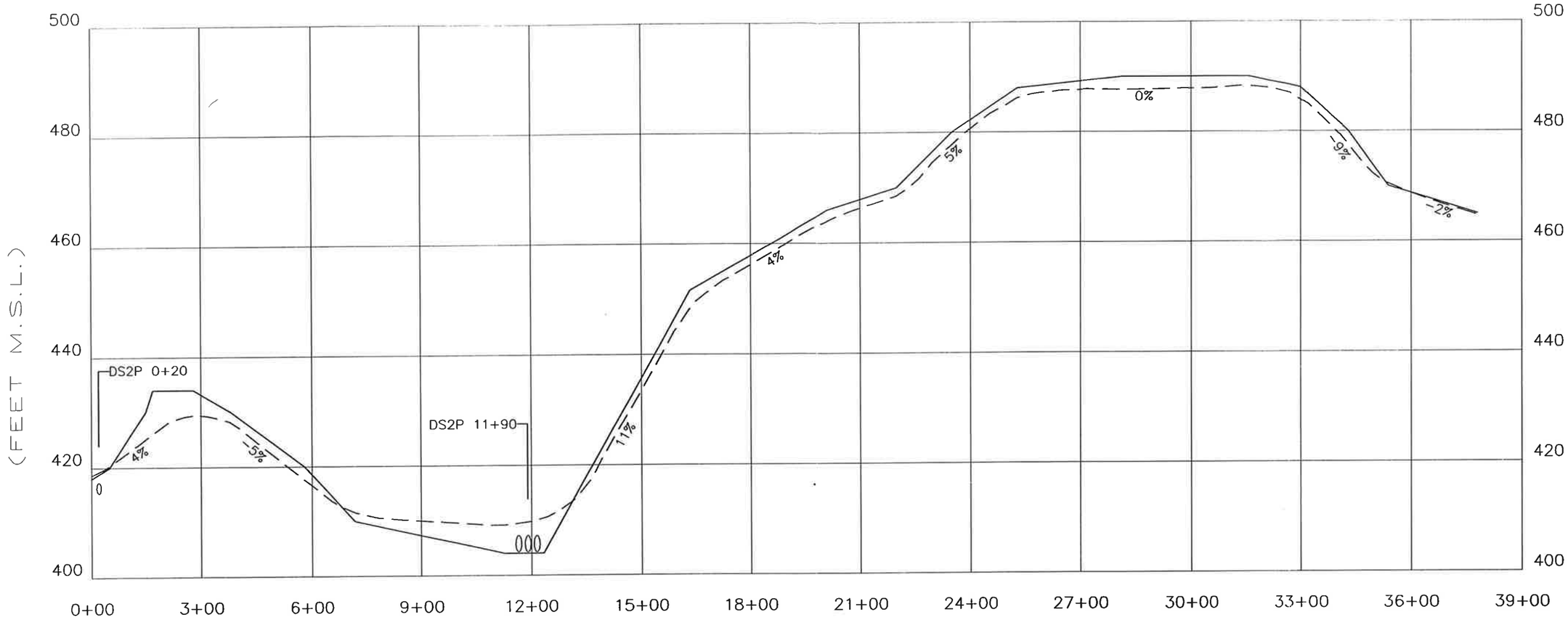

ROAD 2P

SCALE: 1" = 300' HORIZONTAL
1" = 20' VERTICAL

EXISTING GRADE

PROPOSED FINISH GRADE

NOTES:

1. FINISH GRADES SHOWN HEREON MAY VARY FROM BETWEEN 0% AND 17%.
2. SEE INDIVIDUAL CROSS SECTION SHEETS FOR SPECIFIC DRAINAGE STRUCTURE INFORMATION.

PERC ENGINEERING CO., INC.
1506 Highway 78 West Jasper, Alabama 35501
P.O. Box 1712 Jasper, Alabama 35502
(205) 384-5553 Office (205) 384-9411 Fax

BEST COAL, INC.
NARLEY MINE
P-3850
HAUL ROAD PROFILE

DRAWN BY:	P.T.O.	DATE:	2-25-04
DWG. NAME:	BCNMHRP2		
APPROVED BY:	S.R.I.	SCALE:	AS NOTED

D:\PTO\SE\BCNMHRP2.dwg /04 07:24

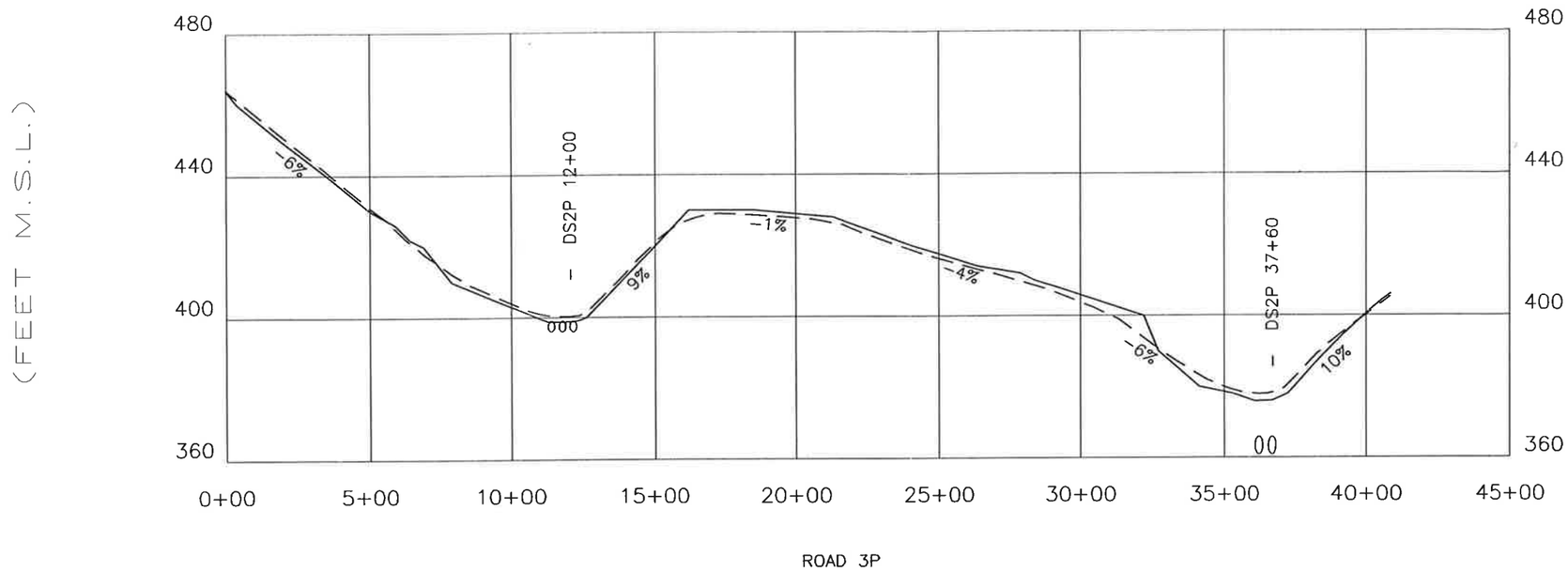

SCALE: 1" = 500' HORIZONTAL
1" = 40' VERTICAL

EXISTING GRADE

PROPOSED FINISHED GRADE

NOTES:

1. FINISH GRADES SHOWN HEREON MAY VARY FROM BETWEEN 0% AND 17%.
2. SEE INDIVIDUAL CROSS SECTION SHEETS FOR SPECIFIC DRAINAGE STRUCTURE INFORMATION.

PERC ENGINEERING CO., INC.
1606 Highway 78 West Jasper, Alabama 35501
P.O. Box 1712 Jasper, Alabama 35502
(205) 384-5553 Office (205) 384-9491 Fax

BEST COAL, INC.
NARLEY MINE
P-3850
HAUL ROAD PROFILE

DRAWN BY: P.T.O. DWG. NAME: BCNM-HRP	DATE: 2-25-04
APPROVED BY: S.E.W.	SCALE: AS NOTED

D:\PROJECTS\BCNM-HRP 1/08/04 11:32

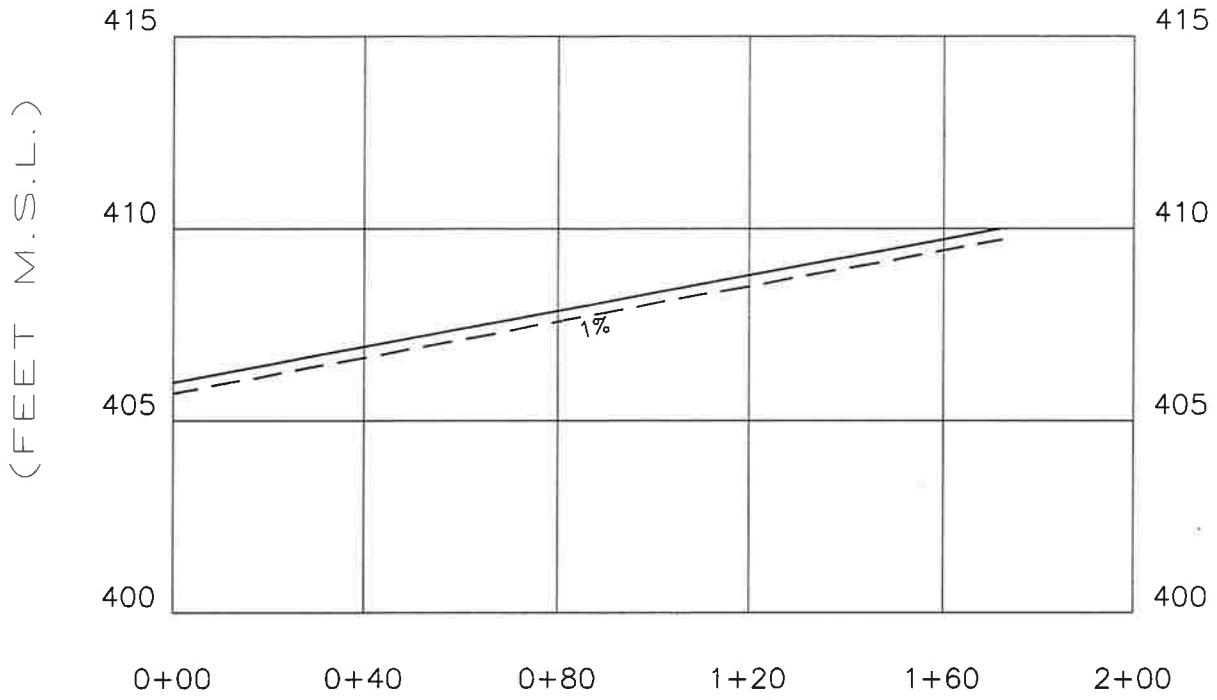

ROAD 4P

SCALE: 1" = 40' HORIZONTAL
1" = 5' VERTICAL

EXISTING GRADE

PROPOSED FINISH GRADE

NOTES:

1. FINISH GRADES SHOWN HEREON MAY VARY FROM BETWEEN 0% AND 17%.
2. SEE INDIVIDUAL CROSS SECTION SHEETS FOR SPECIFIC DRAINAGE STRUCTURE INFORMATION.

PERC ENGINEERING CO., INC.
1608 Highway 78 West Jasper, Alabama 35501
P.O. Box 1712 Jasper, Alabama 35502
(205) 384-3553 Office (205) 384-9451 Fax

BEST COAL, INC.
NARLEY MINE
P-3850
HAUL ROAD PROFILE

DRAWN BY:	P.T.O.	DATE:	2-25-04
DWG. NAME:	BCNMHRP3		
APPROVED BY:	S.E.W.	SCALE:	AS NOTED

04.10.24
D:\PTO\SE#\BCNMHRP3.dwg

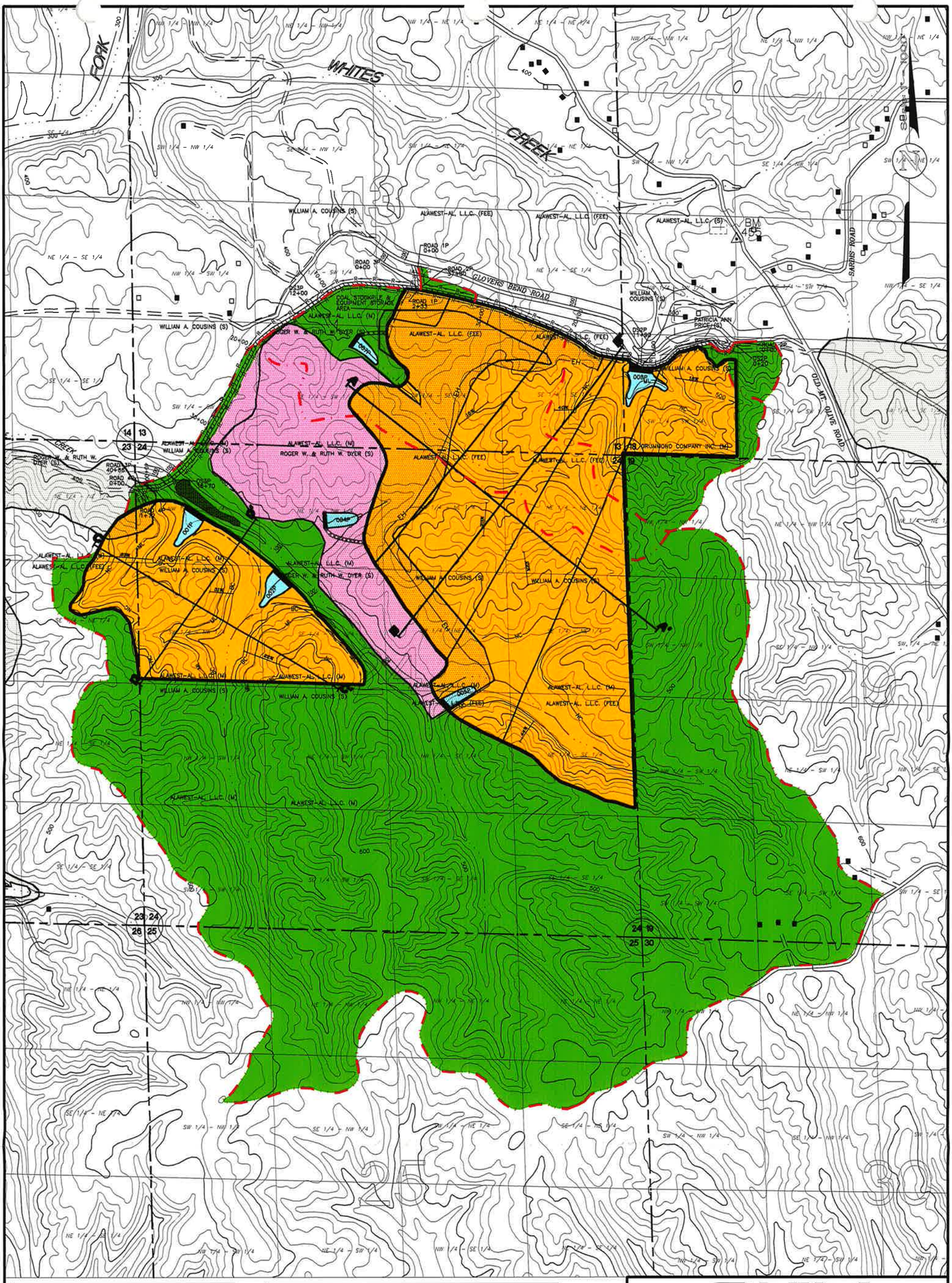

LEGEND

- Permit Boundary
- Previously Surface Mined by Others
- Private Impoundment
- 600 Surface Contour
- DS1P Sediment Basin
- Drainage Divide
- Natural Drainage Course
- R Road Side Ditch
- Primary Road
- Ancillary Road
- County Road (Paved unless otherwise designated)
- Road (Private unless otherwise shown)
- Drainage Structure
- DS2P 0+20

LANDUSE AND CURVE NUMBER INFORMATION

- GRADED & BARE, CURVE NUMBER 81
- UNMANAGED TIMBERLAND, CURVE NUMBER 70
- PREVIOUSLY DISTURBED, NATURALLY REVEGETATED, CURVE NUMBER 88
- SEDIMENT BASIN, CURVE NUMBER 100

PERC ENGINEERING CO., INC.
1508 Highway 78, Hwy. Jasper, Alabama 35501
P.O. Box 1712 Jasper, Alabama 35502
(205) 384-5583 Office (205) 384-9491 Fax

Attachment III.-B.-5.(b)
Drainage Structures DS1P 2+25, DS2P 0+20, DS2P 11+90, DS3P 12+00 & DS3P 36+70
Best Coal, Inc.
Narley Mine
P-3850

DRAWN BY:	P.T.O.	DATE:	3-5-04
DWG. NAME:	BCNMDSWS		
APPROVED BY:	S.E.W.	SCALE:	1"=1000'

D:\PERC\CE\BCNMDSWS.dwg 03/08/04 12:34

Best Coal, Inc.
Narley Mine
P-3850
DrainageStructure
DS1P 2+25

4.3 Inches, 10 Year - 6 Hour, SCS 6 Hour

SRI

General Information

Storm Information:

Storm Type:	Rainfall Event

Accumulated Time (hrs)	Accumulated Depth (in)
0.00	0.0000
0.50	0.1510
1.00	0.3440
1.50	0.5810
2.00	0.9890
2.50	2.5800
3.00	3.0100
3.50	3.3540
4.00	3.5910
4.50	3.8060
5.00	3.9780
5.50	4.1500
6.00	4.3000

Peak 30-minute Intensity: 3.182 in/hr

Structure Networking:

Type	Stru #	(flows into)	Stru #	Musk. K (hrs)	Musk. X	Description
Null	#1	==>	End	0.000	0.000	Drainage Structure DS1P 2+25

#1
Null

Structure Summary:

	Immediate Contributing Area (ac)	Total Contributing Area (ac)	Peak Discharge (cfs)	Total Runoff Volume (ac-ft)
#1	2.000	2.000	3.06	0.26

Subwatershed Hydrology Detail:

Stru #	SWS #	SWS Area (ac)	Time of Conc (hrs)	Musk K (hrs)	Musk X	Curve Number	UHS	Peak Discharge (cfs)	Runoff Volume (ac-ft)
#1	1	2.000	0.056	0.000	0.000	70.000	S	3.06	0.256
	Σ	**2.000**						**3.06**	**0.256**

Best Coal, Inc. Narley Mine, P-3850
Drainage Structure DS1P 2+25

Straight Pipe

Barrel Diameter (in)	Barrel Length (ft)	Barrel Slope (%)	Manning's n	Spillway Elev	Entrance Loss Coefficient	Tailwater Depth (ft)
18.00	100.00	2.00	0.0240	462.01	0.90	0.00

Detailed Discharge Table

Elevation	Straight Pipe (cfs)	Combined Total Discharge (cfs)
462.00	0.000	0.000
462.01	0.000	0.000
462.50	(3)>1.079	1.079
463.00	(3)>3.094	3.094
463.50	(2)>5.177	5.177
464.00	(5)>7.977	7.977
464.50	(6)>8.914	8.914
465.00	(6)>9.595	9.595

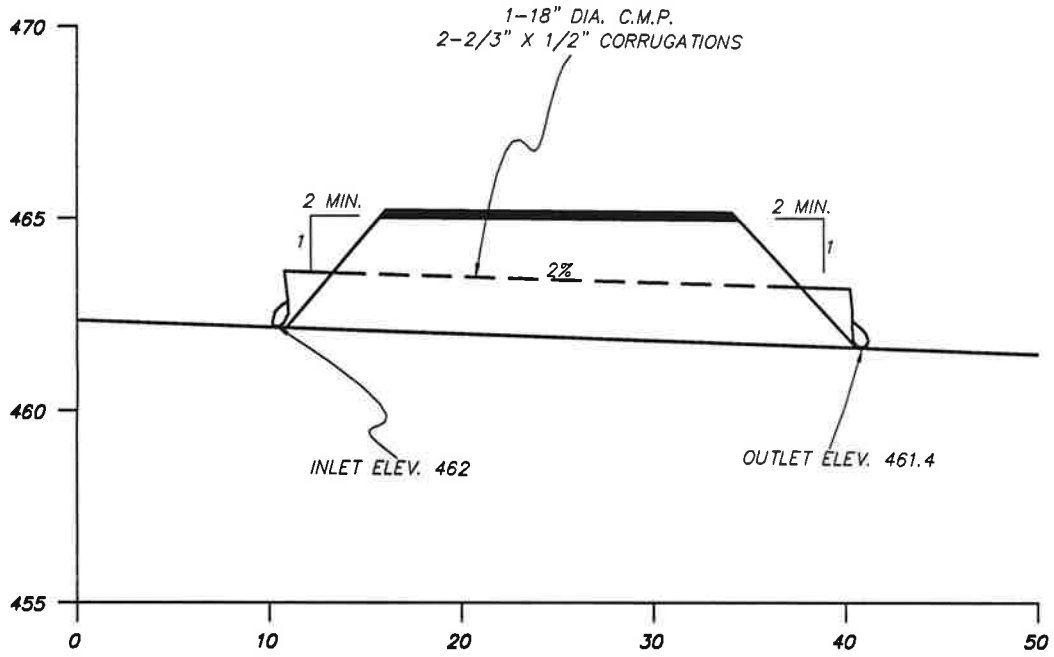

HYDRAULICS INFORMATION

DRAINAGE AREA = 2 ACRES
10 YR-6 HR., Q = 3.06 C.F.S.
MAXIMUM WATER ELEV. = 463
MINIMUM FILL ELEV. = 465
MAXIMUM ALLOWABLE COVER 18" C.M.P. =166'
MINIMUM ALLOWABLE COVER, 18" C.M.P. = 1'
WALL THICKNESS = 0.064"
MINIMUM FREEBOARD = 1'

PERC ENGINEERING CO., INC.

Best Coal, Inc.
Narley Mine
P-3850
Haul Road Cross Section
DS1P-2+25

DRAWN BY:	P.T.O.	DATE:	3-8-04
DWG. NAME:	BCNM1PCS		
APPROVED BY:	S.E.W.	SCALE:	AS NOTED

Best Coal, Inc.

Narley Mine

P-3850

Drainage Structure

DS2P 0+20

4.3 Inches, 10 Year - 6 Hour, SCS 6 Hour

SRI

General Information

Storm Information:

Storm Type:	Rainfall Event

Accumulated Time (hrs)	Accumulated Depth (in)
0.00	0.0000
0.50	0.1510
1.00	0.3440
1.50	0.5810
2.00	0.9890
2.50	2.5800
3.00	3.0100
3.50	3.3540
4.00	3.5910
4.50	3.8060
5.00	3.9780
5.50	4.1500
6.00	4.3000

Peak 30-minute Intensity: 3.182 in/hr

Structure Networking:

Type	Stru #	(flows into)	Stru #	Musk. K (hrs)	Musk. X	Description
Null	#1	==>	End	0.000	0.000	Drainage Structure DS2P 0+20

#1
Null

Structure Summary:

	Immediate Contributing Area (ac)	Total Contributing Area (ac)	Peak Discharge (cfs)	Total Runoff Volume (ac-ft)
#1	6.000	6.000	9.19	0.77

Subwatershed Hydrology Detail:

Stru #	SWS #	SWS Area (ac)	Time of Conc (hrs)	Musk K (hrs)	Musk X	Curve Number	UHS	Peak Discharge (cfs)	Runoff Volume (ac-ft)
#1	1	6.000	0.035	0.000	0.000	70.000	S	9.19	0.767
	Σ	**6.000**						**9.19**	**0.767**

Best Coal, Inc. Narley Mine, P-3850
Drainage Structure DS2P 0+20

Straight Pipe

Barrel Diameter (in)	Barrel Length (ft)	Barrel Slope (%)	Manning's n	Spillway Elev	Entrance Loss Coefficient	Tailwater Depth (ft)
24.00	100.00	2.00	0.0240	415.01	0.90	0.00

Detailed Discharge Table

Elevation	Straight Pipe (cfs)	Combined Total Discharge (cfs)
415.00	0.000	0.000
415.01	0.000	0.000
415.50	(3)>1.443	1.443
416.00	(3)>4.125	4.125
416.50	(3)>7.617	7.617
417.00	(3)>11.757	11.757
417.50	(1)>14.130	14.130
418.00	(6)>18.390	18.390
418.50	(6)>19.790	19.790
419.00	(6)>21.064	21.064
419.50	(6)>22.263	22.263
420.00	(6)>23.389	23.389
420.50	(6)>24.487	24.487
421.00	(6)>25.507	25.507
421.50	(6)>26.519	26.519
422.00	(6)>27.463	27.463
422.50	(6)>28.401	28.401
423.00	(6)>29.290	29.290
423.50	(6)>30.165	30.165
424.00	(6)>31.012	31.012
424.50	(6)>31.831	31.831
425.00	(6)>32.648	32.648

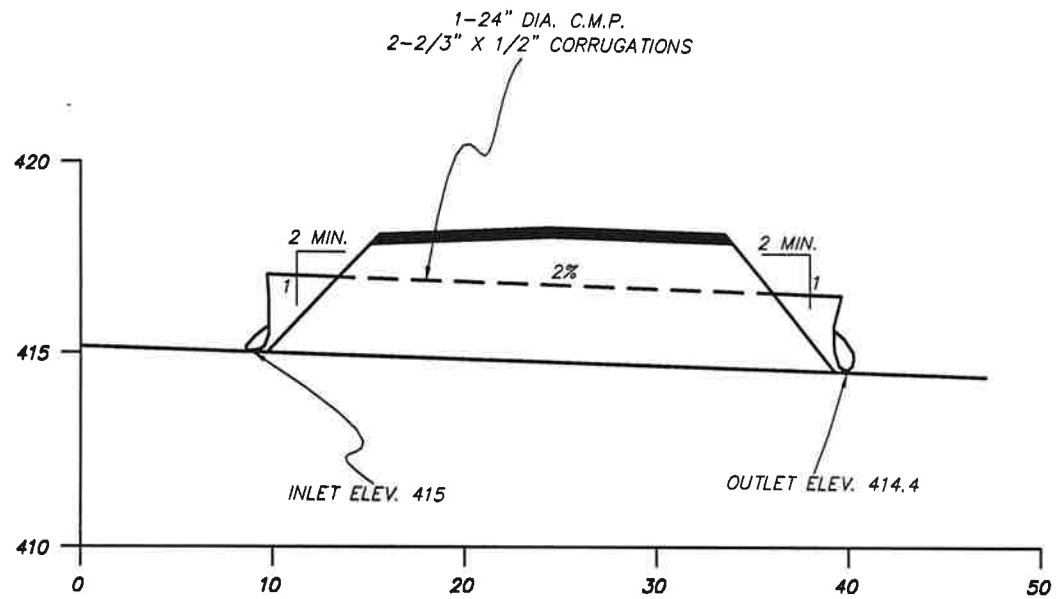

HYDRAULICS INFORMATION

DRAINAGE AREA = 6 ACRES
10 YR-6 HR., Q = 9.19 C.F.S.
MAXIMUM WATER ELEV. = 416.75
MINIMUM FILL ELEV. = 418
MAXIMUM ALLOWABLE COVER 24" C.M.P. = 1.24'
MINIMUM ALLOWABLE COVER 24" C.M.P. = 1'
WALL THICKNESS = 0.064"
MINIMUM FREEBOARD = 1'

PERC ENGINEERING CO., INC.

Best Coal, Inc.
Narley Mine
P-3850
Haul Road Cross Section
DS2P-0+20

DRAWN BY:	P.T.O.	DATE:	3-8-04
DWG. NAME:	BCNM2PCS		
APPROVED BY:	S.E.W.	SCALE:	AS NOTED

Best Coal, Inc.

Narley Mine

P-3850

Drainage Structure

DS2P 11+90

4.3 Inches, 10 Year - 6 Hour, SCS 6 Hour

SRI

General Information

Storm Information:

Storm Type:	Rainfall Event

Accumulated Time (hrs)	Accumulated Depth (in)
0.00	0.0000
0.50	0.1510
1.00	0.3440
1.50	0.5810
2.00	0.9890
2.50	2.5800
3.00	3.0100
3.50	3.3540
4.00	3.5910
4.50	3.8060
5.00	3.9780
5.50	4.1500
6.00	4.3000

Peak 30-minute Intensity: 3.182 in/hr

Structure Networking:

Type	Stru #	(flows into)	Stru #	Musk. K (hrs)	Musk. X	Description
Null	#1	==>	End	0.000	0.000	Drainage Structure DS2P 11+90

#1
Null

Structure Summary:

	Immediate Contributing Area (ac)	Total Contributing Area (ac)	Peak Discharge (cfs)	Total Runoff Volume (ac-ft)
#1	85.000	85.000	151.46	14.51

Subwatershed Hydrology Detail:

Stru #	SWS #	SWS Area (ac)	Time of Conc (hrs)	Musk K (hrs)	Musk X	Curve Number	UHS	Peak Discharge (cfs)	Runoff Volume (ac-ft)
#1	1	33.000	0.069	0.065	0.357	70.000	S	50.55	4.218
	2	52.000	0.156	0.000	0.000	81.000	F	102.93	10.296
	Σ	**85.000**						**151.46**	**14.514**

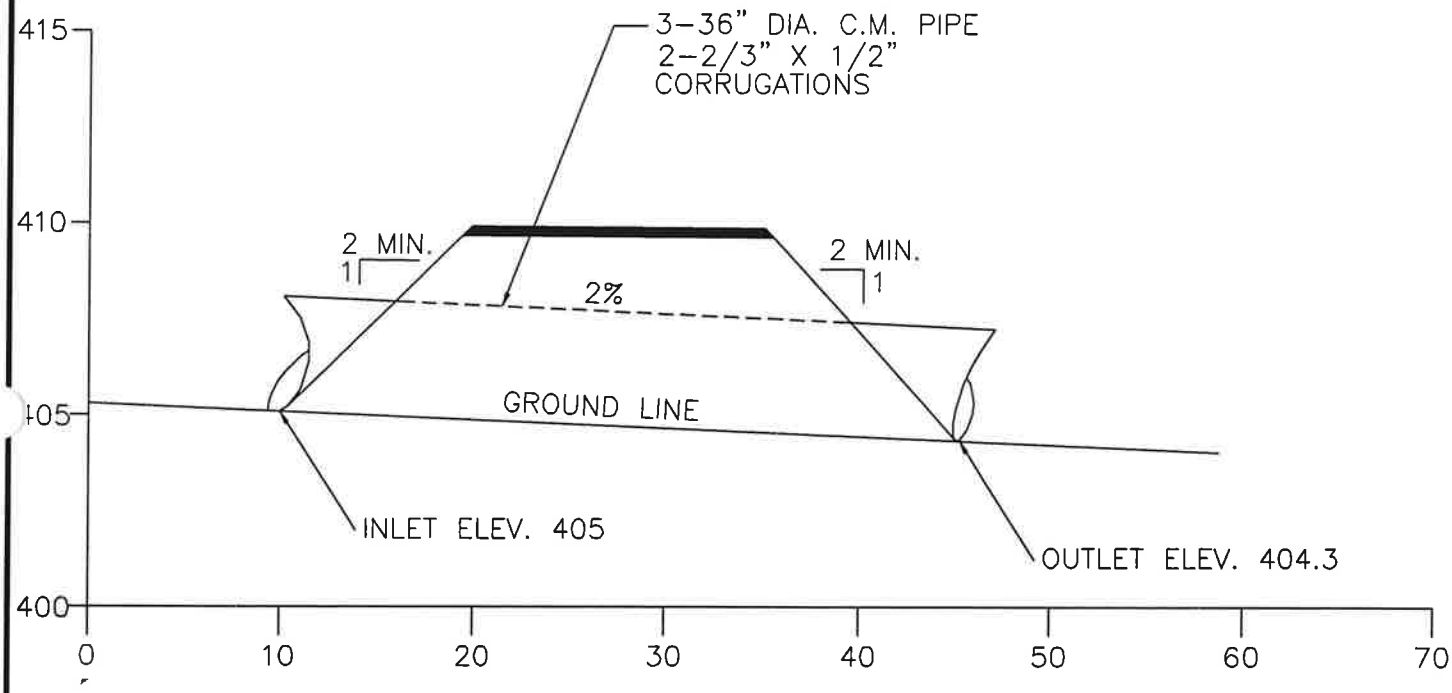

Hydraulics Information

Drainage Area = 85 Acres
10 YR.-6 HR., Q = 151.46 C.F.S.
Maximum Water Elev. = 409.25
Minimum Fill Elev. = 410.25
Maximum Allowable Cover 36" C.M.P. = 83'
Minimum Allowable Cover 36" C.M.P. = 1'
Wall Thickness = 0.064"
Minimum Freeboard = 1'

PERC ENGINEERING CO., INC.
1806 Highway 78 West Jasper, Alabama 35501
P.O. Box 1712 Jasper, Alabama 35502
(205) 384-5553 Office (205) 384-9181 Fax

BEST COAL INC.
NARLEY MINE
P-3850
HAUL ROAD CROSS SECTION
DS2P 11+90

DRAWN BY: S.A.E. DWG. NAME: BCNMHRCS	DATE: 2/26/04
APPROVED BY: S.R.I.	SCALE: AS NOTED

S:\SAE\SCN\BCNMHRCS.dw
/04 16:07

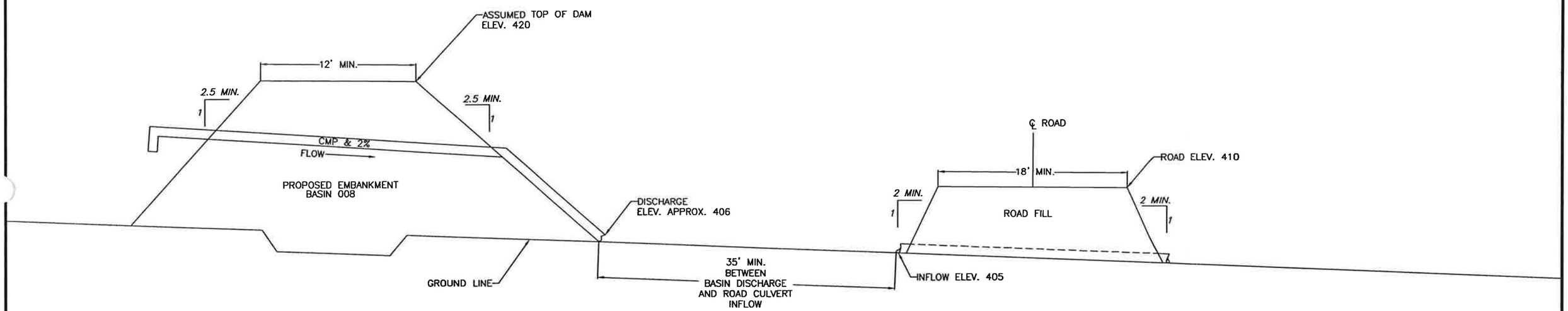

PERC
ENGINEERING CO., INC.
1606 Highway 78 East Jasper, Alabama 35501
P.O. Box 1712 Jasper, Alabama 35502
(205) 384-6853 Office (205) 384-9491 Fax

Best Coal, Inc.
Narley Mine
Typical Section
Road 2P Station 11+90

DRAWN BY:	P.T.O.	DATE:	3-8-04
DWG. NAME:	BCNM2PTS		
APPROVED BY:	S.E.W.	SCALE:	NONE

D:\PROJECTS\BCNM\2PTS.d 3/04 11:25

Best Coal, Inc.

Narley Mine

P-3850

Drainage Structure

DS3P 12+00

4.3 Inches, 10 Year - 6 Hour, SCS 6 Hour

SRI

General Information

Storm Information:

Storm Type:	Rainfall Event

Accumulated Time (hrs)	Accumulated Depth (in)
0.00	0.0000
0.50	0.1510
1.00	0.3440
1.50	0.5810
2.00	0.9890
2.50	2.5800
3.00	3.0100
3.50	3.3540
4.00	3.5910
4.50	3.8060
5.00	3.9780
5.50	4.1500
6.00	4.3000

Peak 30-minute Intensity: 3.182 in/hr

Structure Networking:

Type	Stru #	(flows into)	Stru #	Musk. K (hrs)	Musk. X	Description
Null	#1	==>	End	0.000	0.000	Drainage Structure DS3P 12+00

#1
Null

Structure Summary:

	Immediate Contributing Area (ac)	Total Contributing Area (ac)	Peak Discharge (cfs)	Total Runoff Volume (ac-ft)
#1	120.000	120.000	156.09	20.88

Subwatershed Hydrology Detail:

Stru #	SWS #	SWS Area (ac)	Time of Conc (hrs)	Musk K (hrs)	Musk X	Curve Number	UHS	Peak Discharge (cfs)	Runoff Volume (ac-ft)
#1	1	79.000	0.370	0.023	0.390	81.000	F	128.47	15.642
	2	41.000	0.139	0.000	0.000	70.000	S	27.61	5.240
	Σ	**120.000**						**156.09**	**20.882**

Best Coal, Inc., Narley Mine, P-3850, Drainage Structure DS3P 12+00

Straight Pipe

Barrel Diameter (in)	Barrel Length (ft)	Barrel Slope (%)	Manning's n	Spillway Elev	Entrance Loss Coefficient	Tailwater Depth (ft)
36.00	100.00	2.00	0.0240	395.01	0.90	0.00

Straight Pipe

Barrel Diameter (in)	Barrel Length (ft)	Barrel Slope (%)	Manning's n	Spillway Elev	Entrance Loss Coefficient	Tailwater Depth (ft)
36.00	100.00	2.00	0.0240	395.01	0.90	0.00

Straight Pipe

Barrel Diameter (in)	Barrel Length (ft)	Barrel Slope (%)	Manning's n	Spillway Elev	Entrance Loss Coefficient	Tailwater Depth (ft)
36.00	100.00	2.00	0.0240	395.01	0.90	0.00

Detailed Discharge Table

Elevation	Straight Pipe (cfs)	Straight Pipe (cfs)	Straight Pipe (cfs)	Combined Total Discharge (cfs)
395.00	0.000	0.000	0.000	0.000
395.01	0.000	0.000	0.000	0.000
395.50	(3)>2.156	(3)>2.156	(3)>2.156	6.469
396.00	(3)>6.194	(3)>6.194	(3)>6.194	18.582
396.50	(3)>11.427	(3)>11.427	(3)>11.427	34.280
397.00	(3)>17.643	(3)>17.643	(3)>17.643	52.929
397.50	(3)>24.682	(3)>24.682	(3)>24.682	74.045
398.00	(3)>32.477	(3)>32.477	(3)>32.477	97.432
398.50	(3)>40.856	(3)>40.856	(3)>40.856	122.568
399.00	(5)>47.566	(5)>47.566	(5)>47.566	142.698
399.50	(5)>53.533	(5)>53.533	(5)>53.533	160.598
400.00	(6)>57.185	(6)>57.185	(6)>57.185	171.556

Elevation	Straight Pipe (cfs)	Straight Pipe (cfs)	Straight Pipe (cfs)	Combined Total Discharge (cfs)
400.50	(6)>60.323	(6)>60.323	(6)>60.323	180.969
401.00	(6)>63.299	(6)>63.299	(6)>63.299	189.898
401.50	(6)>66.147	(6)>66.147	(6)>66.147	198.440
402.00	(6)>68.876	(6)>68.876	(6)>68.876	206.629
402.50	(6)>71.497	(6)>71.497	(6)>71.497	214.490
403.00	(6)>74.029	(6)>74.029	(6)>74.029	222.087
403.50	(6)>76.444	(6)>76.444	(6)>76.444	229.332
404.00	(6)>78.833	(6)>78.833	(6)>78.833	236.498
404.50	(6)>81.123	(6)>81.123	(6)>81.123	243.368
405.00	(6)>83.366	(6)>83.366	(6)>83.366	250.098
405.50	(6)>85.551	(6)>85.551	(6)>85.551	256.654
406.00	(6)>87.666	(6)>87.666	(6)>87.666	262.998
406.50	(6)>89.771	(6)>89.771	(6)>89.771	269.312
407.00	(6)>91.771	(6)>91.771	(6)>91.771	275.312
407.50	(6)>93.770	(6)>93.770	(6)>93.770	281.311
408.00	(6)>95.710	(6)>95.710	(6)>95.710	287.130
408.50	(6)>97.607	(6)>97.607	(6)>97.607	292.820
409.00	(6)>99.503	(6)>99.503	(6)>99.503	298.510
409.50	(6)>101.312	(6)>101.312	(6)>101.312	303.936
410.00	(6)>103.116	(6)>103.116	(6)>103.116	309.348

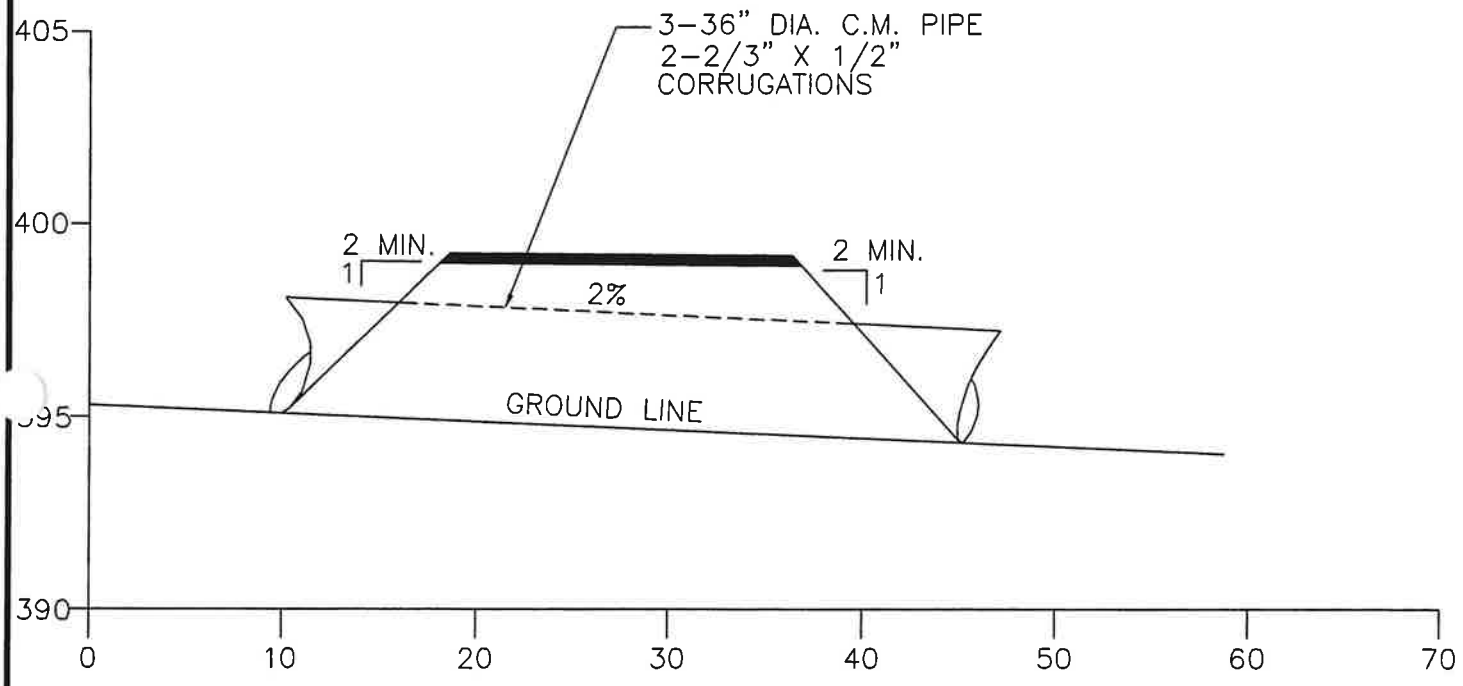

Hydraulics Information

Drainage Area = 120.0 Acres
10 YR.-6 HR., Q = 156.09 C.F.S.
Maximum Water Elev. = 399.25
Minimum Fill Elev. = 400.25
Maximum Allowable Cover 36" C.M.P. = 83'
Minimum Allowable Cover 36" C.M.P. = 1'
Wall Thickness = 0.064"
Minimum Freeboard = 1'

PERC ENGINEERING CO., INC.
1828 Highway 78 West Jasper, Alabama 35501
P.O. Box 1712 Jasper, Alabama 35502
(205) 384-5553 Office (205) 384-8491 Fax

BEST COAL INC.
NARLEY MINE
P-3850
HAUL ROAD CROSS SECTION
DS3P 12+00

DRAWN BY: S.A.E. DWG. NAME: BCNMHCS2	DATE: 2/26/04
APPROVED BY: S.R.I.	SCALE: AS NOTED

C:\SAE\BCNMHCS2.dwg 02/26/04 11:28

Best Coal, Inc.

Narley Mine

P-3850

Drainage Structure

DS3P 36+70

4.3 Inches, 10 Year - 6 Hour, SCS 6 Hour

SRI

General Information

Storm Information:

Storm Type:	Rainfall Event

Accumulated Time (hrs)	Accumulated Depth (in)
0.00	0.0000
0.50	0.1510
1.00	0.3440
1.50	0.5810
2.00	0.9890
2.50	2.5800
3.00	3.0100
3.50	3.3540
4.00	3.5910
4.50	3.8060
5.00	3.9780
5.50	4.1500
6.00	4.3000

Peak 30-minute Intensity: 3.182 in/hr

Structure Networking:

Type	Stru #	(flows into)	Stru #	Musk. K (hrs)	Musk. X	Description
Null	#1	==>	End	0.000	0.000	Drainage Structure DS3P 36+70

#1
Null

Structure Summary:

	Immediate Contributing Area (ac)	Total Contributing Area (ac)	Peak Discharge (cfs)	Total Runoff Volume (ac-ft)
#1	991.000	991.000	586.61	136.77

Subwatershed Hydrology Detail:

Stru #	SWS #	SWS Area (ac)	Time of Conc (hrs)	Musk K (hrs)	Musk X	Curve Number	UHS	Peak Discharge (cfs)	Runoff Volume (ac-ft)
#1	1	156.000	0.153	0.303	0.327	81.000	F	308.80	30.888
	2	87.000	0.134	0.120	0.335	70.000	S	58.59	11.119
	3	75.000	0.134	0.120	0.335	68.000	S	44.71	8.743
	4	673.000	0.635		0.000	70.000	S	231.14	86.015
	Σ	**991.000**						**586.61**	**136.765**

Best Coal, Inc. Narley Mine, P-3850
Drainage Structure DS3P 36+70

Straight Pipe

Barrel Diameter (in)	Barrel Length (ft)	Barrel Slope (%)	Manning's n	Spillway Elev	Entrance Loss Coefficient	Tailwater Depth (ft)
60.00	100.00	2.00	0.0240	360.01	0.90	0.00

Straight Pipe

Barrel Diameter (in)	Barrel Length (ft)	Barrel Slope (%)	Manning's n	Spillway Elev	Entrance Loss Coefficient	Tailwater Depth (ft)
60.00	100.00	2.00	0.0240	360.01	0.90	0.00

Detailed Discharge Table

Elevation	Straight Pipe (cfs)	Straight Pipe (cfs)	Combined Total Discharge (cfs)
360.00	0.000	0.000	0.000
360.01	0.000	0.000	0.000
360.50	(3)>3.591	(3)>3.591	7.182
361.00	(3)>10.316	(3)>10.316	20.631
361.50	(3)>19.047	(3)>19.047	38.093
362.00	(3)>29.394	(3)>29.394	58.789
362.50	(3)>41.138	(3)>41.138	82.275
363.00	(3)>54.129	(3)>54.129	108.258
363.50	(3)>68.258	(3)>68.258	136.516
364.00	(3)>83.447	(3)>83.447	166.895
364.50	(3)>99.604	(3)>99.604	199.208
365.00	(3)>116.705	(3)>116.705	233.410
365.50	(3)>134.669	(3)>134.669	269.338
366.00	(4)>151.949	(4)>151.949	303.899
366.50	(5)>166.063	(5)>166.063	332.125
367.00	(5)>179.869	(5)>179.869	359.737
367.50	(5)>192.666	(5)>192.666	385.331
368.00	(5)>204.689	(5)>204.689	409.378
368.50	(5)>216.020	(5)>216.020	432.041

Elevation	Straight Pipe (cfs)	Straight Pipe (cfs)	Combined Total Discharge (cfs)
369.00	(5)>226.795	(5)>226.795	453.589
369.50	(5)>237.082	(5)>237.082	474.163
370.00	(5)>246.725	(5)>246.725	493.449
370.50	(6)>254.847	(6)>254.847	509.694
371.00	(6)>262.456	(6)>262.456	524.912
371.50	(6)>269.868	(6)>269.868	539.737
372.00	(6)>277.065	(6)>277.065	554.130
372.50	(6)>284.095	(6)>284.095	568.190
373.00	(6)>290.944	(6)>290.944	581.888
373.50	(6)>297.638	(6)>297.638	595.276
374.00	(6)>304.193	(6)>304.193	608.387
374.50	(6)>310.600	(6)>310.600	621.200
375.00	(6)>316.877	(6)>316.877	633.755

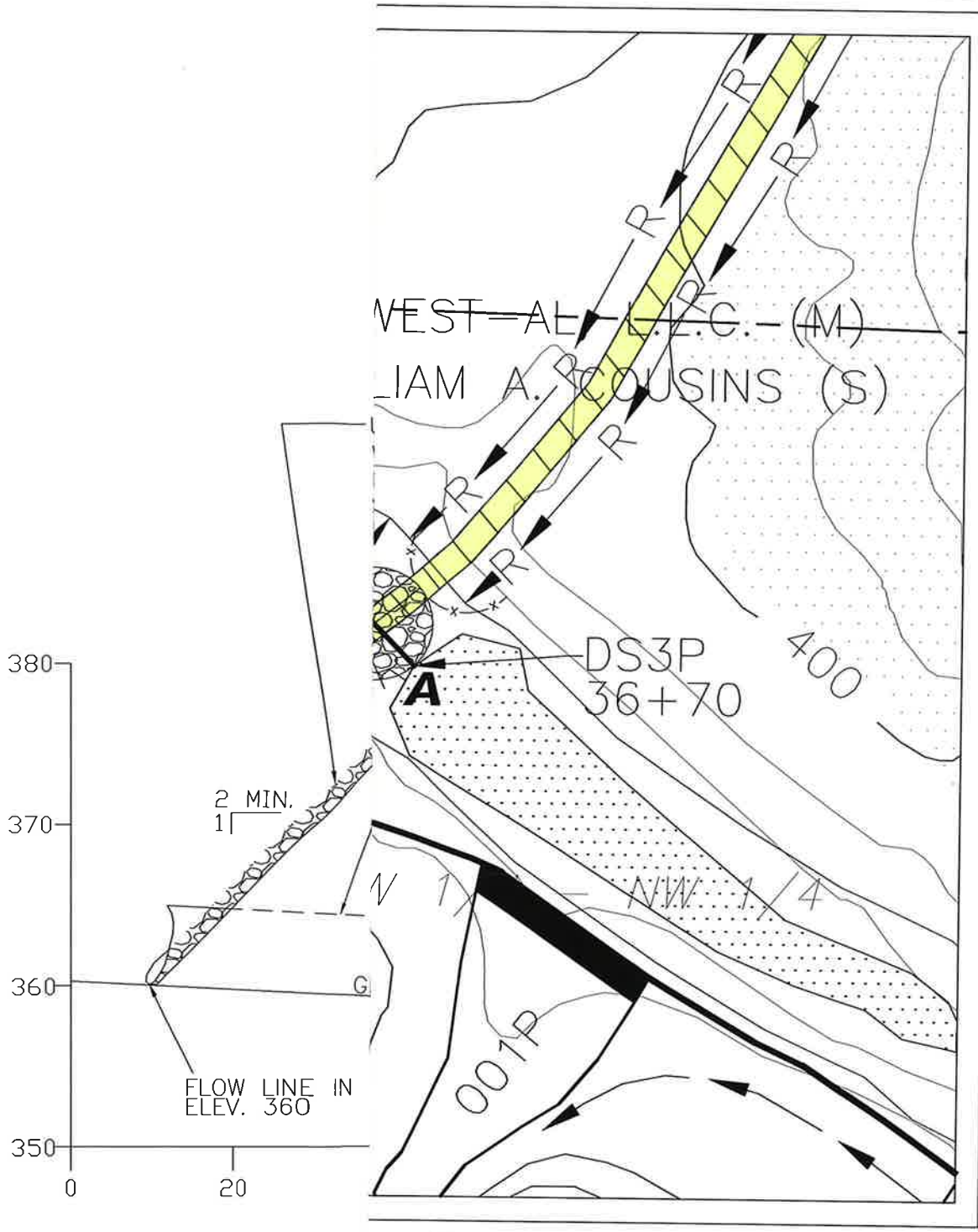

CROSS

PERC
ENGINEERING CO., INC.
1608 Highway 78 West Jasper, Alabama 35501
P.O. Box 1712 Jasper, Alabama 35502
(205) 384-5553 Office (205) 384-9491 Fax

BEST COAL, INC.
NARLEY MINE
HAULROAD CROSSING
DS3P 36+70

DRAWN BY: P.T.O. DWG. NAME: BCNMHRCR	DATE: 3-2-04
APPROVED BY: S.E.W.	SCALE: AS NOTED

Best Coal, Inc.
Narley Mine
P-3850
Soil Classification

Best Coal, Inc.
Narley Mine
P-3850

STABILITY ANALYSIS DATA

METHODOLOGY

Due to the fill at Drainage Structure DS3P 36+70 being the most adverse fill section at the Narley Mine, a stability analysis was performed to prove its safety. The static loading stability analysis was performed using the Simplified Bishop Method. The computer program used was the REAME Slope Stability Program as developed by Dr. Yang H. Haung, P.E. of the University of Kentucky.

SOIL CLASSIFICATION UNITS

The soil types used in the construction of the fill section of Drainage Structure DS3P 36+70 (GM) and the soil types (soil classification) of the material between the proposed fill and stiff base of Drainage Structure DS3P 36+70 (Bedrock) were sampled and analyzed by PERC Engineering Co., Inc. The soil properties used in the stability analysis (ML) type soils, were taken from the U.S. Department of the Interior Bureau of Reclamation Design of Small Dams.*

SOIL PROPERTIES

	UNIFIED CLASS	COHESION (PSF)	ANGLE OF INT. FRICTION	DESIGN DENSITY (PCF)
Drainage Structure DS3P-36+70 Fill Material	GC	115.2	24.2	133.4
Drainage Structure DS3P-36+70 Fill Material	Bedrock	10,000	45.0	170.0

*United States Department of Interior Bureau of Reclamation Design of Small Dams page 137.

STABILITY ANALYSIS DATA
(Continued)

DESIGN DATA

1) Safety factors for embankments with 2 H:1V slopes.
2) DMIN = 0.00
3) Pore pressure ration = .1.

SAFETY FACTORS

CROSS-SECTION NUMBER	STATIC SAFETY FACTOR
Drainage Structure DS5P 36+70	1.5

FOUNDATIONS AND ABUTMENTS

The foundation and abutments area will be inspected for visible structural deficiencies after clearing and grubbing, and if found they will be treated using sound engineering practices.

LIQUID AND PLASTIC LIMITS TEST REPORT

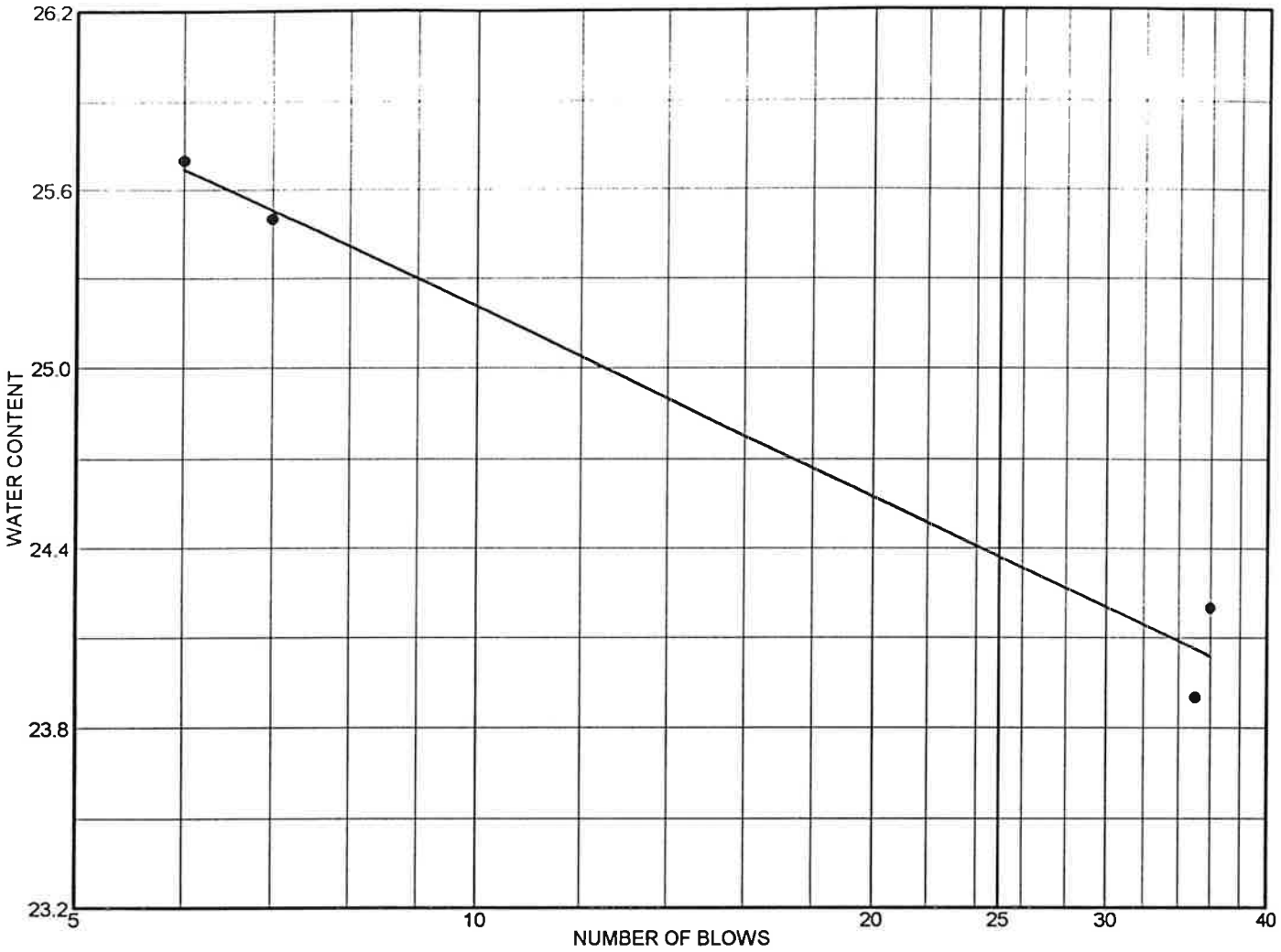

	MATERIAL DESCRIPTION	LL	PL	PI	%<#40	%<#200	USCS
●	Grey, Silty clayey gravel with sand	24	19	5	40.95	32.1	GC

Project No. **Client:** BEST COAL, INC.

Project: DS3P-36+70

● **Location:** NARLEY MINE

Remarks:

● EMBANKMENT MATERIAL

LIQUID AND PLASTIC LIMITS TEST REPORT

PERC ENGINEERING CO., INC.

Figure

Best Coal, Inc.
Narley Mine
P-3850
Drainage Structure DS3P 36+70
Stability Analysis

REAME (Rotational Equilibrium Analysis of Multilayered Embankments)

Implemented on the 16-bit Microcomputers C. F. Hains, Jr. and D. M. Hains
2301 22nd Ave.
Northport, AL 35476
(205)-339-6536

Best Coal, Inc. Narley Mine Drainage Structure DS3P 36+70 Static

Number of cases to be analyzed 1

Case Number 1

Number of boundary lines= 3
Number of points on boundary lines are: 2 2 6

On boundary line no. 1 Point no. and coordinates are:
1 100.000 361.000 2 400.000 355.000

On boundary line no. 2 Point no. and coordinates are:
1 200.000 360.000 2 283.333 358.333

On boundary line no. 3 Point no. and coordinates are:
1 100.000 362.000 2 200.000 360.000 3 230.000 375.000 4 250.000 375.000 5 283.333 358.333
6 400.000 356.000

Line no. and slope of each segment are:
1 -.020
2 -.020
3 -.020 .500 .000 -.500 -.020

No. of radius control zones= 1 Plot or no plot= 1 No. of seepage cases= 1

Total no. of lines at bottom of radius control zones is: 1

For rad. cont. zone no. 1 Radius decrement= .000 No. of Circles= 5 Id no. for first circle=, 1
Line no.= 1 Begin pt. no.= 1 End pt. no.= 2

Soil no.	Cohesion	F. angle	Unit wt.
1	10000.000	45.000	170.000
2	115.200	24.200	133.400

Seismic coefficient= .000 Min. depth of tallest slice= .000 Unit weight of water= 62.400

The factors of safety are determined by the SIMPLIFIED BISHOP method

ISPG= 2 NSRCH= 0 No. of slices= 10 No. of add. radii= 2

Pore pressure ratio= .100

```
point1=(   260.000,   375.000) point2=(   290.000,   375.000) point3=(   290.000,   415.000) NJ=    3 NI=    4
   Automatic search will follow after grid with XINC=    15.000 and YINC=    20.000

At point (   260.000,   375.000) under seepage    1,the radius and the corresponding factor of safety are:
      17.197    16.071         14.652     2.316         12.107     2.222          9.562     2.247          7.017     2.661
      13.803     2.284         12.955     2.253         11.259     2.228         10.410     2.242
   Lowest factor of safety=     2.222 and occurs at radius  =     12.107


At point (   270.000,   375.000) under seepage    1,the radius and the corresponding factor of safety are:
      17.397    17.877         15.706     1.836         14.016     1.905         12.325     2.104         10.635     2.859
      16.833    13.383         16.270     1.826         15.143     1.852         14.579     1.874
   Lowest factor of safety=     1.826 and occurs at radius  =     16.270


At point (   280.000,   375.000) under seepage    1,the radius and the corresponding factor of safety are:
      17.596    37.796         16.761    21.461         15.925     2.224         15.089     2.761         14.253     4.446
      16.482     2.040         16.203     2.122         15.646     2.356         15.367     2.527
   Lowest factor of safety=     2.040 and occurs at radius  =     16.482


At point (   290.000,   375.000) under seepage    1,the radius and the corresponding factor of safety are:
      17.796  4648.681
   Lowest factor of safety=  4648.681 and occurs at radius  =     17.796


At point (   260.000,   385.000) under seepage    1,the radius and the corresponding factor of safety are:
      27.195    14.981         24.439     2.146         21.683     2.070         18.928     2.047         16.172     2.289
      20.765     2.052         19.846     2.043         18.009     2.073         17.091     2.138
   Lowest factor of safety=     2.043 and occurs at radius  =     19.846


At point (   270.000,   385.000) under seepage    1,the radius and the corresponding factor of safety are:
      27.395    14.635         25.493     1.589         23.592     1.629         21.691     1.811         19.790     2.501
      26.761    10.107         26.127     1.592         24.860     1.593         24.226     1.606
   Lowest factor of safety=     1.589 and occurs at radius  =     25.493


At point (   280.000,   385.000) under seepage    1,the radius and the corresponding factor of safety are:
      27.594    26.329         26.548     1.703         25.501     1.902         24.454     2.330         23.408     3.675
      27.246    23.443         26.897    18.088         26.199     1.755         25.850     1.820
   Lowest factor of safety=     1.703 and occurs at radius  =     26.548


At point (   290.000,   385.000) under seepage    1,the radius and the corresponding factor of safety are:
      27.794   265.878
   Lowest factor of safety=   265.878 and occurs at radius  =     27.794


At point (   260.000,   395.000) under seepage    1,the radius and the corresponding factor of safety are:
      37.193    15.539         34.226     2.230         31.260     2.217         28.293     2.290         25.327     2.735
      33.237     2.221         32.249     2.216         30.271     2.226         29.282     2.248
   Lowest factor of safety=     2.216 and occurs at radius  =     32.249


At point (   270.000,   395.000) under seepage    1,the radius and the corresponding factor of safety are:
      37.393    14.531         35.281     1.630         33.169     1.638         31.057     1.741         28.945     2.266
      36.689     9.228         35.985     1.636         34.577     1.628         33.873     1.630
   Lowest factor of safety=     1.628 and occurs at radius  =     34.577
```

```
At point (   280.000,   395.000) under seepage    1,the radius and the corresponding factor of safety are:
      37.592    20.318         36.335     1.543         35.078     1.708         33.820     2.062         32.563     3.180
      37.173    17.106         36.754    10.598         35.916     1.587         35.497     1.641
   Lowest factor of safety=     1.543 and occurs at radius  =     36.335

At point (   290.000,   395.000) under seepage    1,the radius and the corresponding factor of safety are:
      37.792    93.205         37.389    98.860         36.986 22843.440
   Lowest factor of safety=    93.205 and occurs at radius  =     37.792

At point (   260.000,   405.000) under seepage    1,the radius and the corresponding factor of safety are:
      47.191    16.963         44.077     2.371         40.963     2.407         37.850     2.583         34.736     3.307
      46.153     2.405         45.115     2.384         43.039     2.370         42.001     2.383
   Lowest factor of safety=     2.370 and occurs at radius  =     43.039

At point (   270.000,   405.000) under seepage    1,the radius and the corresponding factor of safety are:
      47.391    15.044         45.068     1.737         42.745     1.758         40.423     1.866         38.100     2.329
      46.616     8.626         45.842     1.739         44.294     1.739         43.519     1.745
   Lowest factor of safety=     1.737 and occurs at radius  =     45.068

At point (   280.000,   405.000) under seepage    1,the radius and the corresponding factor of safety are:
      47.590    18.430         46.122     1.500         44.654     1.596         43.186     1.861         41.718     2.832
      47.101    14.578         46.612     4.423         45.633     1.523         45.143     1.553
   Lowest factor of safety=     1.500 and occurs at radius  =     46.122

oint (   290.000,   405.000) under seepage    1,the radius and the corresponding factor of safety are:
      47.790    50.938         47.177    43.982         46.563     2.432         45.949     3.205         45.335     5.543
      46.972 24361.480         46.768     2.279         46.358     2.625         46.154     2.873
   Lowest factor of safety=     2.279 and occurs at radius  =     46.768

At point (   260.000,   415.000) under seepage    1,the radius and the corresponding factor of safety are:
      57.189    18.926         53.997     2.564         50.806     2.597         47.614     2.867         44.423     3.840
      56.125     2.608         55.061     2.579         52.933     2.559         51.869     2.567
   Lowest factor of safety=     2.559 and occurs at radius  =     52.933

At point (   270.000,   415.000) under seepage    1,the radius and the corresponding factor of safety are:
      57.389    15.767         54.855     1.861         52.322     1.904         49.788     2.051         47.255     2.619
      56.544     7.868         55.700     1.857         54.011     1.869         53.166     1.883
   Lowest factor of safety=     1.857 and occurs at radius  =     55.700

At point (   280.000,   415.000) under seepage    1,the radius and the corresponding factor of safety are:
      57.588    18.034         55.910     1.556         54.231     1.629         52.552     1.823         50.873     2.526
      57.029    13.396         56.469     1.543         55.350     1.573         54.790     1.597
   Lowest factor of safety=     1.543 and occurs at radius  =     56.469

At point (   290.000,   415.000) under seepage    1,the radius and the corresponding factor of safety are:
      57.788    34.227         56.964 25209.290
   Lowest factor of safety=    34.227 and occurs at radius  =     57.788
```

For pore pressure ratio .100

At point (280.000, 405.000) ,RADIUS 46.122
the minimum factor of safety is 1.500

At point (280.000, 405.000) under seepage 1,the radius and the corresponding factor of safety are:

47.590	18.430	46.122	1.500	44.654	1.596	43.186	1.861	41.718	2.832
47.101	14.578	46.612	4.423	45.633	1.523	45.143	1.553		

Lowest factor of safety= 1.500 and occurs at radius = 46.122

At point (295.000, 405.000) under seepage 1,the radius and the corresponding factor of safety are:
47.890 4515.186
Lowest factor of safety= 4515.186 and occurs at radius = 47.890

At point (265.000, 405.000) under seepage 1,the radius and the corresponding factor of safety are:

47.291	15.295	44.541	1.991	41.791	2.010	39.041	2.125	36.291	2.632
46.374	6.181	45.457	1.994	43.624	1.992	42.707	1.997		

Lowest factor of safety= 1.991 and occurs at radius = 44.541

At point (280.000, 425.000) under seepage 1,the radius and the corresponding factor of safety are:

67.586	18.157	65.697	1.642	63.807	1.716	61.917	1.902	60.028	2.539
66.957	12.558	66.327	1.629	65.067	1.660	64.437	1.684		

Lowest factor of safety= 1.629 and occurs at radius = 66.327

oint (280.000, 385.000) under seepage 1,the radius and the corresponding factor of safety are:

27.594	26.329	26.548	1.703	25.501	1.902	24.454	2.330	23.408	3.675
27.246	23.443	26.897	18.088	26.199	1.755	25.850	1.820		

Lowest factor of safety= 1.703 and occurs at radius = 26.548

At point (283.750, 405.000) under seepage 1,the radius and the corresponding factor of safety are:

47.665	22.919	46.518	1.545	45.370	1.732	44.222	2.136	43.074	3.372
47.283	19.773	46.900	13.886	46.135	1.592	45.752	1.652		

Lowest factor of safety= 1.545 and occurs at radius = 46.518

At point (276.250, 405.000) under seepage 1,the radius and the corresponding factor of safety are:

47.515	16.274	45.727	1.544	43.938	1.598	42.150	1.765	40.361	2.449
46.919	11.690	46.323	1.537	45.131	1.555	44.534	1.573		

Lowest factor of safety= 1.537 and occurs at radius = 46.323

At point (280.000, 410.000) under seepage 1,the radius and the corresponding factor of safety are:

52.589	18.125	51.016	1.522	49.442	1.603	47.869	1.817	46.295	2.664
52.065	13.902	51.540	1.507	50.491	1.541	49.967	1.568		

Lowest factor of safety= 1.507 and occurs at radius = 51.540

At point (280.000, 400.000) under seepage 1,the radius and the corresponding factor of safety are:

42.591	19.016	41.229	1.500	39.866	1.630	38.503	1.962	37.140	2.992
42.137	15.509	41.683	7.811	40.774	1.531	40.320	1.573		

Lowest factor of safety= 1.500 and occurs at radius = 41.229

```
At point (   280.000,   395.000) under seepage    1,the radius and the corresponding factor of safety are:
       37.592    20.318         36.335     1.543         35.078     1.708         33.820     2.062         32.563     3.180
       37.173    17.106         36.754    10.598         35.916     1.587         35.497     1.641
   Lowest factor of safety=     1.543 and occurs at radius  =     36.335


At point (   283.750,   400.000) under seepage    1,the radius and the corresponding factor of safety are:
       42.666    25.225         41.624     1.618         40.582     1.829         39.539     2.270         38.497     3.632
       42.319    22.428         41.972    17.338         41.277     1.674         40.929     1.743
   Lowest factor of safety=     1.618 and occurs at radius  =     41.624


At point (   276.250,   400.000) under seepage    1,the radius and the corresponding factor of safety are:
       42.516    16.307         40.833     1.512         39.150     1.574         37.467     1.775         35.783     2.601
       41.955    12.131         41.394     1.503         40.272     1.525         39.711     1.545
   Lowest factor of safety=     1.503 and occurs at radius  =     41.394


For pore pressure ratio      .100

At point (   280.000,   400.000) ,RADIUS    41.229
   the minimum factor of safety is      1.500
```

Cross section in distorted scale. Numerals indicate boundary line no.
If there area more than 10 bound. lines, alphabets will then be used. P indicates Piezometric line. If a portion of Piezometric line coincides with the ground or another boundary line, only the ground or boundary line will be shown. X indicates intersection of two boundary lines. * indicates failure surface.

The minimum factor of safety is 1.500

```
3.840E+02 X+++++++++X+++++++++X+++++++++X+++++++++X+++++++++X
          +                                                 +
          +                                                 +
          +                                                 +
          +                                                 +
3.800E+02 X         +         +         +         +         X
          +                                                 +
          +                                                 +
          +                                                 +
          +                                                 +
3.760E+02 X         +         +         +         +         X
          +                     333                         +
          +                                                 +
          +                                                 +
          +                                                 +
3.720E+02 X         +         +         +         +         X
          +                   3   3                         +
          +                                                 +
          +                       *                         +
          +                                                 +
3.680E+02 X         +         +         +         +         X
          +                   3     3                       +
          +                                                 +
          +                                                 +
          +                                                 +
3.640E+02 X         +         +       * +         +         X
          +                   3       3                     +
          +                                                 +
          +       333333                                    +
          +       111111333333         *                     +
3.600E+02 X         +   11111 X2222     +         +         X
          +                 11111 22222                     +
          +                     111111X3333                 +
          +                           1111133333            +
          +                                1111133333       +
3.560E+02 X         +         +         +         111113    X
          +                                             1   +
          +                                                 +
          +                                                 +
          +                                                 +
3.520E+02 X         +         +         +         +         X
          +                                                 +
          +                                                 +
          +                                                 +
          +                                                 +
3.480E+02 X         +         +         +         +         X
          +                                                 +
          +                                                 +
          +                                                 +
          +                                                 +
3.440E+02 X+++++++++X+++++++++X+++++++++X+++++++++X+++++++++X
```